

Hydraulic Valves
Industrial Standard

Parker

ENGINEERING YOUR SUCCESS.

Your Parker partner:

User Safety Responsibility Statement for All Parker Products

FAILURE OR IMPROPER SELECTION OR IMPROPER USE OF THE PRODUCTS DESCRIBED HEREIN OR RELATED ITEMS CAN CAUSE DEATH, PERSONAL INJURY AND PROPERTY DAMAGE.

This document and other information from Parker-Hannifin Corporation, its subsidiaries and authorized distributors provide product or system options for further investigation by users having technical expertise.

The user, through its own analysis and testing, is solely responsible for making the final selection of the system and components and assuring that all performance, endurance, maintenance, safety and warning requirements of the application are met. The user must analyze all aspects of the application, follow applicable industry standards, and follow the information concerning the product in the current product catalog and in any other materials provided from Parker or its subsidiaries or authorized distributors.

To the extent that Parker or its subsidiaries or authorized distributors provide component or system options based upon data or specifications provided by the user, the user is responsible for determining that such data and specifications are suitable and sufficient for all applications and reasonably foreseeable uses of the components or systems.

In this edition, page layout and drawing methods
may differ due to changes in data processing.
Erroneous data cannot be excluded despite careful revision.

Copyright © 2019 by Parker Hannifin Corporation. All rights reserved

Introduction 1
Product index, system solutions, Drive Controlled Pump, explosion-proof valves

Directional Control Valves 2
Seated valves, spool valves, direct and pilot operated

Proportional DC Valves 3
Standard, high repeatability, VCD® performance

Pressure Valves 4
Subplate and screw-in mounting

Flow Valves 5
Throttle and flow control valves, subplate and screw-in mounting

Check Valves 6
Shuttle valves, direct and pilot operated check valves, subplate and screw-in mounting

Sandwich Valves 7
For pressure, check and flow functions

Slip-In Cartridge Valves 8
According to ISO 7368, with pressure, directional, flow and check functions

SAE Flange Valves 9
For pressure, directional, flow and check functions

Valves for Pipe Mounting 10
With pressure, directional, flow and check functions

Electronics 11
Amplifiers, axis controllers and accessories

Accessories 12
Subplates, pressure gauge valves, pressure switches, pressure intensifiers

Notes

Description	Page
Product index, alphanumeric	1-2
Product index, by function	1-4
System solutions	1-6
Drive Controlled Pump	1-7
Explosion-proof valves	1-12
Machine directive – position papers	1-14

Product Index, Alphanumeric

Series	Description	Page
2F1C	2-way variable flow control valve	5-14
A	Subplates for DC valves	12-7
A10	Adaptor plate for regenerative and hybrid valves	12-34
A102	Subplate for pressure valves	12-11
BK	Bolt kit	12-38
C / 9C	Check valves, direct operated	10-41
C*A	2-way slip-in cartridge valve without auxiliary function	8-8
C*B	2-way slip-in cartridge valve with stroke limiter	8-9
C*C	2-way slip-in cartridge valve for pilot system mounting	8-11
C*F	2-way slip-in cartridge valve for pressure relief function	8-14
C*G	2-way slip-in cartridge valve for pressure relief function plus pilot system mounting	8-15
C*H	2-way slip-in cartridge valve with stroke limiter	8-16
C*V	2-way slip-in cartridge valve with shuttle valve	8-19
C*W	2-way slip-in cartridge valve with shuttle valve	8-20
C10C*E	2-way slip-in cartridge valve with position control	8-87
C1DB	2-way slip-in cartridge valve, check valve	8-77
C4V	Check valve, direct operated	6-13
C4V	Check valve, pilot operated	6-18
C5P	Check valve, pilot operated, SAE flange	9-64
C5V	Check valve, direct operated, SAE flange	9-60
CB	Cartridge block	12-30
CE, CP	2-way slip-in cartridge valves without cover	8-4
CM	Check valve, direct operated	7-52
Compax3F	Electrohydraulic axis controller	11-22
CP / 9CP	Check valves, pilot operated	10-43
CPOM	Check valve, pilot operated	7-61
CS	Check valve, direct operated	6-7
CS06	Sandwich plate	12-26
D*1FB	DC valve, pilot operated, proportional, with/without OBE	3-24
D*1FC	DC valve, pilot operated, proportional	3-64
D*1FC	DC valve, pilot operated, proportional, with EtherCAT	3-75
D*1FP	DC valve, pilot operated	3-99
D*1FP	DC valve, pilot operated, with EtherCAT	3-110
D*1VW	DC valve, pilot operated	2-61
D*1VWR	Regenerative and hybrid valve, pilot operated	2-74
D*1VWZ	Regenerative and hybrid valve, pilot operated	2-74
D11P	DC valve, direct operated	2-85
D1FB	DC valve, direct operated, proportional, with/without OBE	3-3
D1FC	DC valve, direct operated, proportional	3-48
D1FC	DC valve, direct operated, proportional, with EtherCAT	3-75
D1FP	DC valve, direct operated	3-78
D1FP	DC valve, direct operated, with EtherCAT	3-110
D1FV	Pressure reducing valve, proportional, with/without OBE	3-40
D1MW	DC valve, direct operated	2-33
D1SE	Seat valve, 3/2-way	2-2
D1VA	DC valve, direct operated, pneumatically	2-96
D1VL	DC valve, direct operated, hand lever	2-100
D1VP	DC valve, direct operated, hydraulically	2-85
D1VW	DC valve, direct operated	2-5
D1VW	DC valve, direct operated, with inductive position control	2-19
D1VW 8W	DC valve, direct operated, 8 watt	2-13
D1VW Ex	DC valve, direct operated, explosion proof	2-28

Series	Description	Page
D30FP	DC valve, pilot operated	3-92
D30FP	DC valve, pilot operated, with EtherCAT	3-110
D31DW	DC valve, pilot operated	2-61
D31NW	DC valve, pilot operated	2-61
D31NWR	Regenerative and hybrid DC valve, pilot operated	2-74
D3DL	DC valve, direct operated, hand lever	2-100
D3DP	DC valve, direct operated, hydraulically	2-85
D3DWR	Regenerative and hybrid valve, direct operated	2-74
D3FB	DC valve, direct operated, proportional, with / w/o OBE	3-14
D3FC	DC valve, direct operated, proportional	3-65
D3FC	DC valve, direct operated, proportional, with EtherCAT	3-83
D3FP	DC valve, direct operated	3-93
D3FP	DC valve, direct operated, with EtherCAT	3-110
D3MW	DC valve, direct operated	2-55
D3W	DC valve, direct operated	2-39
D3W	DC valve, direct operated, with inductive position control	2-46
D4L	DC valve, direct operated, hand lever	2-100
D4P	DC valve, direct operated, hydraulically	2-85
D4S	Seat valve, pipe mounting	10-24
D4S	Seat valve, subplate mounting	6-21
D51*	Cover plate	12-28
D5S	Seat valve, SAE flange	9-33
D9L	DC valve, direct operated	2-100
D9P	DC valve, direct operated	2-85
DSBA	Pilot valve with preload valve	8-25
DSDU	Pressure reducing valve, pilot operated, TÜV certificate	8-40
DUR*L06	Flow control valve, proportional, 2-way	5-20
EVSA	Pressure reducing valve, direct operated	4-15
EX-M05	Test unit	11-38
F / 9F	Throttle check valves	10-37
F5C	Throttle valve, proportional, SAE flange	9-47
FM	Throttle check valve	7-40
FS	Throttle check valve	5-6
GFG2	Flow control valve, 2-way	5-10
H06	Sandwich plate	12-22
H10	Sandwich plate for regenerative function	12-36
LCM	Pressure compensator	7-39
MSP	Multi-station manifold	12-12
MV / 9MV	Needle valves	10-33
MVI	Check und throttle valve	5-2
N / 9N	Needle valves	10-35
NS	Needle valve	5-4
PADA	Adaptor plate	12-21
PC*MS	Flow control valve, 2-way	5-8
PCD00	E-module for proportional pressure flow control valves	11-10
PCM / 9PCM	Flow control valves	10-39
PID00	Axis controller	11-18
PRDM	Pressure reducing valve, direct operated	7-22
PRM	Pressure reducing valve, pilot operated	7-27
PRPM	Pressure reducing valve, pilot operated, proportional	7-35
PSB	Pressure switch	12-42
PWD00	E-module for proportional valves	11-2
PWDXX	E-module for proportional valves with position transducer	11-6
PZD00	E-module for command signal	11-14

Product index by function see pages 4-5.

Product Index, Alphanumeric

Series	Description	Page
R / RS*E	Pressure relief valves, pilot operated, cartridge	8-34
R06M	Pilot valve with pressure relief function	8-21
R1E02	Pressure relief valve, direct operated	4-18
R4R	Pressure reducing valve, pilot operated, pipe mounting	10-8
R4R	Pressure reducing valve, pilot operated, subplate mounting	4-83
R4R*P2	Pressure reducing valve, pilot operated, proportional, pipe mounting	10-19
R4R*P2	Pressure reducing valve, pilot operated, proportional, subplate mounting	4-95
R4S	Sequence valve, pilot operated, subplate mounting	4-75
R4U	Unloading valve, subplate mounting	4-69
R4V	Pressure relief valve, pilot operated, pipe mounting	10-2
R4V / R6V	Pressure relief valves, pilot operated, subplate mounting	4-21
R4V / R6V	Pressure relief valves, pilot operated, proportional, subplate mounting	4-49
R4V / R6V	Pressure relief valves, pilot operated, TÜV certificate, subplate mounting	4-30
R4V / R6V*P*	Pressure relief valves, pilot operated, proportional, OBE, subplate mounting	4-55
R4V*P2	Pressure relief valve, pilot operated, proportional, pipe mounting	10-14
R5A	Pressure compensator, 2-way, SAE flange	9-51
R5P	Pressure compensator, 3-way, SAE flange	9-53
R5R	Pressure reducing valve, pilot operated, SAE flange	9-17
R5R*P2	Pressure reducing valve, pilot operated, proportional, SAE flange	9-29
R5S	Sequence valve, pilot operated, SAE flange	9-13
R5U	Unloading valve, pilot operated, SAE flange	9-8
R5V	Pressure relief valve, pilot operated, SAE flange	9-2
R5V*P2	Pressure relief valve, pilot operated, proportional, SAE flange	9-23
RDM	Pressure relief valve, direct operated	7-9
RE*E*T	Pressure relief valve, pilot operated, proportional, OBE, cartridge	8-47
RE*E*W	Pressure relief valve, pilot operated, proportional, cartridge	8-43
RE06M*T	Pressure relief valve, direct operated, proportional, OBE, subplate mounting	4-43
RE06M*W	Pressure relief valve, direct operated, subplate mounting	4-39
RH	Check valve, pilot operated	10-45
RK / RB	Check valve, threaded, block mounting	6-4
RM	Pressure relief valve, pilot operated	7-13
RPDM	Pilot valve, proportional, with pressure relief function	8-23
RS06M	Pilot valve with pressure relief function	8-22
S06M	Pilot valve with pressure sequence	8-27
SCPSD	Pressure switch, electronically	12-47
SD500	Pressure intensifier	12-53
SPD	Subplate for DC valve	12-2
SPP	Subplate for pressure valves	12-8
SPV / SPZ	Check valve, threaded	6-11
SPZBE	Check valve, threaded	6-9
SSR	Shuttle valve, block mounting	6-2
SVLA	Check valve, pilot operated, subplate mounting	8-28
SVLB	Check valve, pilot operated, cartridge	8-79

Series	Description	Page
TDA	Throttle valve, 2-way, proportional, pilot operated	8-106
TDC	High response valve, 2-way	8-113
TDP	VCD® performance valve, 2-way	8-121
TDW	Cartridge valve, 2/2-way, active controlled	8-94
TEA	Throttle valve, 2-way, proportional, pilot operated, with shut-off valve	8-110
TEP	High-response valve, 2-way, with shut-off valve	8-131
TK	Tie rod kit	12-39
TPQ	High-response valve, 3-way	8-142
UR*E / US*E	Unloading valves, pilot operated, cartridge	8-53
UR06M / US06M	Pilot valves with unloading function	8-26
VB	Pressure relief valve	4-5
VBY	Pressure relief valve, pilot operated	4-10
VBY*K	Pressure relief valve, proportional	4-63
VM	Pressure reducing valve, direct operated	4-78
VMY	Pressure reducing valve, pilot operated, proportional	4-87
VS	Pressure relief valve	4-2
WM	Pressure gauge selector valve	12-40
Z1DW	Shut-off valve, direct operated	7-2
ZDR	Pressure reducing valve, pilot operated, high performance	7-31
ZDV	Pressure relief valve, pilot operated, high performance	7-18
ZNS	Counterbalance valve, pilot operated	7-69
ZRD	Throttle check valve, high performance	7-49
ZRE	Check valve, pilot operated, high performance	7-66
ZRV	Check valve, direct operated, high performance	7-58
ZSRA / ZSRB	Shuttle valves, sandwich plate	8-28
ZUDB	Pressure relief valve, sandwich plate	8-24

Product index by function see pages 4-5.

Product Index by Function

Function	Description	Series	Page
2-way cartridge	Cover without auxiliary function	C*A	8-8
	Cover for pressure relief function	C*F	8-14
		C*G	8-15
	Cover with stroke limiter	C*B	8-9
		C*H	8-16
	Cover with shuttle valve	C*V	8-19
		C*W	8-20
	Cover for pilot system mounting	C*C	8-11
	Slip-in cartridge without cover	CE, CP	8-4
	Complete valve, with position control	C10C*E	8-87
	Complete valve, directional function, active	TDW	8-94
	Check valve	C1DB	8-77
Cover plate		D51*	12-28
Check and throttle valve	Needle valve, screw-In mounting	MVI	5-2
	Needle valve, pipe mounting	MV / 9MV	10-33
		N / 9N	10-35
		NS	5-4
Axis controller	For position, pressure and speed control	PID00	11-18
Adaptor plate		PADA	12-21
Subplate	For regenerative function	A10	12-34
	For pressure valves	A102	12-11
		SPP	12-8
	For DC valves	A	12-7
		SPD	12-2
Body for 2/2-way slip-in cartridge	Cartridge block	CB	12-30
Throttle check valve	Pipe mounting	F / 9F	10-37
	Subplate mounting	FS	5-6
	Sandwich plate	FM	7-40
	High performance, sandwich plate	ZRD	7-48
Throttle valve	Proportional, pilot operated, 2/2-way, cartridge	TDA	8-106
	Proportional, pilot operated, with shut-off valve, cartridge	TEA	8-110
	Proportional, SAE flange	F5C	9-47
Unloading valve	Manually pilot operated, cartridge	UR*E / US*E	8-53
	Subplate mounting	R4U	4-69
	Pilot operated, SAE flange	R5U	9-8
Pressure relief valve	Direct operated, screw-in mounting	EVSA	4-15
	Direct operated, subplate mounting	VB	4-5
		VS	4-2
	Direct operated, proportional, subplate mounting	RE06M*W	4-39
	Direct operated, proportional, OBE, subplate mounting	RE06M*T	4-43
	Direct operated, seated type	R1E02	4-18
	Direct operated, sandwich plate	RDM	7-9
	Pilot operated, cartridge	R / RS*E	8-34
	Proportional, subplate mounting	VBY*K	4-63

Function	Description	Series	Page
Pressure relief valve	Pilot operated, sandwich plate	RM	7-13
	Pilot operated, subplate mounting	VBY	4-10
	Pilot operated, high performance, sandwich plate	ZDV	7-18
	Pilot operated, pipe mounting	R4V	10-2
	Pilot operated, subplate mounting	R4V / R6V	4-21
	Pilot operated, proportional, OBE, subplate mounting	R4V / R6V*P*	4-55
	Pilot operated, proportional, cartridge	RE*E*W	8-43
	Pilot operated, proportional, OBE, cartridge	RE*E*T	8-47
	Pilot operated, proportional, subplate mounting	R4V / R6V	4-49
		R4V*P2	10-14
	Pilot operated, proportional, SAE flange	R5V*P2	9-23
	Pilot operated, SAE flange	R5V	9-2
	Pilot operated, TÜV certificate, subplate mounting	R4V / R6V	4-30
	Pilot operated, TÜV certificate, cartridge	DSDU	8-40
Pressure reducing valve	Direct operated, subplate mounting	VM	4-78
	Direct operated, sandwich plate	PRDM	7-22
	Proportional, with/without OBE, subplate mounting	D1FV	3-50
	Pilot operated, high performance, sandwich plate	ZDR	7-31
	Pilot operated, sandwich plate	PRM	7-27
	Pilot operated, pipe mounting	R4R	10-8
	Pilot operated, subpl. mounting	R4R	4-83
	Pilot operated, proportional, subplate mounting	VMY	4-87
	Pilot operated, proportional, pipe mounting	R4R*P2	10-19
	Pilot operated, proportional, subplate mounting	R4R*P2	4-95
	Pilot operated, SAE flange	R5R	9-17
	Pilot operated, proportional, SAE flange	R5R*P2	9-29
Pressure reducing valve	Pilot operated, proportional, sandwich plate	PRPM	7-35
Pressure switch	Electro-hydraulic	PSB	12-42
	Electronics	SCPSD	12-47
Pressure intensifier		SD500	12-53
Pressure compensator	2-way, sandwich plate	LCM	7-39
	2-way, SAE flange	R5A	9-51
	3-way, SAE flange	R5P	9-53
Sequence valve	Pilot operated, subplate mounting	R4S	4-75
	Pilot operated, SAE flange	R5S	9-13
Servo drive	For closed loop postion and force control	Compax3F	11-22
Electronics	For proportional pressure/flow control valves	PCD00	11-10
	For proportional valves	PWD00	11-2
		PWDXX	11-6
	For command signal processing	PZD00	11-14
Pressure gauge valve		WM	12-40
Test unit	For Parker prop. and servo proportional valves with OBE	EX-M05	11-38

Alphanumeric product index see pages 2-3.

Product Index by Function

Function	Description	Series	Page
Servo proportional valve	Direct operated, subplate mounting	D1FP	3-78
		D3FP	3-85
	Direct operated, with EtherCAT, subplate mounting	D*FP	3-110
	Pilot operated, subpl. mounting	D*1FP	3-99
	Pilot operated, with EtherCAT, subplate mounting	D*1FP	3-110
	Pilot operated, subpl. mounting	D30FP	3-92
	Pilot operated, with EtherCAT, subplate mounting	D30FP	3-110
	Pilot operated, proportional, 2-way, cartridge	TDC	8-113
	Pilot operated, VCD®, 2-way, cartridge	TDP	8-121
	Pilot operated, VCD®, 2-way, cartridge with shut-off valve	TEP	8-131
	Pilot operated, VCD®, 3-way, cartridge	TPQ	8-142
Check valve	Direct operated, pipe mounting	C / 9C	10-41
	Direct operated, subplate mounting	C4V	6-13
		CS	6-7
	Direct operated, SAE flange	C5V	9-60
	Direct operated, sandwich plate	CM	7-52
		ZRV	7-58
	Block mounting	RK / RB	6-4
		SPV / SPZ	6-11
		SPZBE	6-9
	Pilot operated, block mounting	SVLB	8-79
	Pilot operated, pipe mounting	CP / 9CP	10-43
		RH	10-45
	Pilot operated, subplate mounting	C4V	6-18
		SVLA	8-28
	Pilot operated, SAE flange	C5P	9-64
	Pilot operated, sandwich plate	CPOM	7-61
	Pilot operated, sandwich plate, high performance	ZRE	7-66
Regenerative and hybrid DC valve	Pilot operated, subplate mounting	D*1VWR	2-74
		D*1VWZ	2-74
		D31NWR	2-74
	Direct operated, subpl. mounting	D3DWR	2-74
Multi-station manifold		MSP	12-12
Bolt kit		BK	12-38
Counterbalance valve	Pilot operated, high performance, sandwich plate	ZNS	7-69
Tie rod kit		TK	12-39
Flow control valve	2-way, subplate mounting	PC*MS	5-8
	2-way, pipe mounting	PCM / 9PCM	10-39
	2-way, subplate mounting	2F1C	5-14
		GFG2	5-10
	Proportional, subplate mounting	DUR*L06	5-20
Pilot valve, pressure function	With unloading function, subplate mounting	UR06M / US06M	8-26
	With pressure relief function, subplate mounting	RS06M	8-22
		R06M	8-21
	With preload function, subplate mounting	DSBA	8-25
	With sequence function, subplate mounting	S06M	8-27
	Proportional, with pressure relief function, sandwich plate	RPDM	8-23
	With pressure reducing function, sandwich plate	ZUDB	8-24

Function	Description	Series	Page
Shuttle valve	Screw-in mounting	SSR	6-2
	Sandwich plate	ZSRA / ZSRB	8-28
Directional seat valve	3/2-way, subplate mounting	D1SE	2-2
	Pipe mounting	D4S	10-24
	Subplate mounting	D4S	6-22
	SAE flange	D5S	9-33
DC valve, direct operated	Direct operated, hydraulically, subplate mounting	D11P	2-85
		D1VP	2-85
		D3DP	2-85
		D4P	2-85
		D9P	2-85
	Direct operated, solenoid, 8 watt, subplate mounting	D1VW 8 Watt	2-13
	Direct operated, solenoid, explosion proof, subplate mounting	D1VW	2-28
	Direct operated, solenoid, with inductive position control, subplate mounting	D1VW	2-19
		D3W	2-46
	Direct operated, solenoid, subplate mounting	D1VW	2-5
		D1MW	2-33
		D3MW	2-55
		D3W	2-39
	Direct operated, solenoid, sandwich plate	Z1DW	7-2
	Direct operated, hand lever, subplate mounting	D1VL	2-100
		D3DL	2-100
		D4L	2-100
		D9L	2-100
	Direct operated, pneumatically, subplate mounting	D1VA	2-96
	Direct operated, proportional, with CANopen, subplate mounting	D1FB	3-24
		D3FB	3-24
	Direct/pilot operated, proportional, with OBE and position feedback, with EtherCAT, subplate mounting	D*FC	3-75
	Direct operated, proportional, with OBE and position feedback, subplate mounting	D1FC	3-48
		D3FC	3-56
	Direct operated, proportional, with/without OBE, subplate mounting	D1FB	3-3
		D3FB	3-14
DC valve, pilot operated	Pilot operated, subplate mounting	D*1VW	2-61
		D31DW	2-61
		D31NW	2-61
	Pilot operated, proportional, with OBE and position feedback, subplate mounting	D*1FC	3-64
	Pilot operated, proportional, with/without OBE, subplate mounting	D*1FB	3-24
Sandwich plate		CS06	12-26
		H06	12-22
		H10	12-36

Alphanumeric product index see pages 2-3.

System Solutions

Parker is more than a supplier of excellent components. Together with our customers, we develop innovative systems solutions. In this industrial valves catalogue, we would like to point out to you our special competence in industrial manifold blocks. Our experienced, highly motivated team answers technical needs with complete, sound solutions.

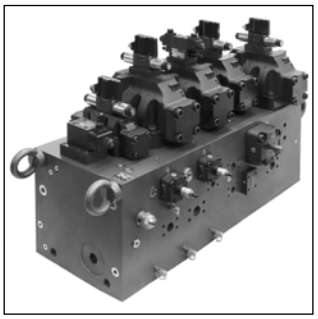



Our performance spectrum comprises a complex understanding of the job, project management, design, and production, including final tests of manifold blocks on our modern, automated test beds. In addition we offer compact hydraulic axis controls.

When you entrust us with your system requirements, you can rely on getting an optimal solution from the Parker valves program with all components used in accordance with their characteristics. Furthermore you can rely on us taking full responsibility for all our valves, electronics and combined functions within the system.

In addition to customized solutions Parker also supplies standardized press controls as shown in our catalogue HY11-3362/UK "Hydraulic Press Controls according to DIN EN 693".
Contact your Parker representation for information and offerings concerning your hydraulics.



Drive Controlled Pump

The Drive Controlled Pump system solutions from Parker are variable-speed hydraulic pump systems. They essentially consist of an AC drive unit (frequency controller and electronics), an asynchronous motor or synchronous servo motor, as well as a hydraulic pump. They enable the central, regulated hydraulic supply of all drives. Thus, they provide the exact power that is required in the cycle at all times.

The controller continuously records target values for the volume flow and/or pressure of the machine control system and compares them to actual pressure value. The drive speed of the electric motor is regulated so that the pump provides the exact amount of oil required to achieve the target value.



The Drive Controlled Pump Catalogue HY11-3352/UK contains complete product information including the ordering code. Detailed information on all Parker components can be found in the individual product catalogues (see next page).

Features

- Suitable for 400 V supply
- Change-over pressure/volume flow control
- Optimum dimensioning of all components using the Parker DriveCreator software
- Standard interfaces for simple conversion of conventional pump systems
- Dual pump systems for larger volume flow possible – also as combination of variable and fixed displacement pumps
- High precision and dynamic operation for flow and pressure control
- High energy efficiency through optimum adjustment to cycle requirements
- Low noise emissions through optimized pump design and speed adjustment

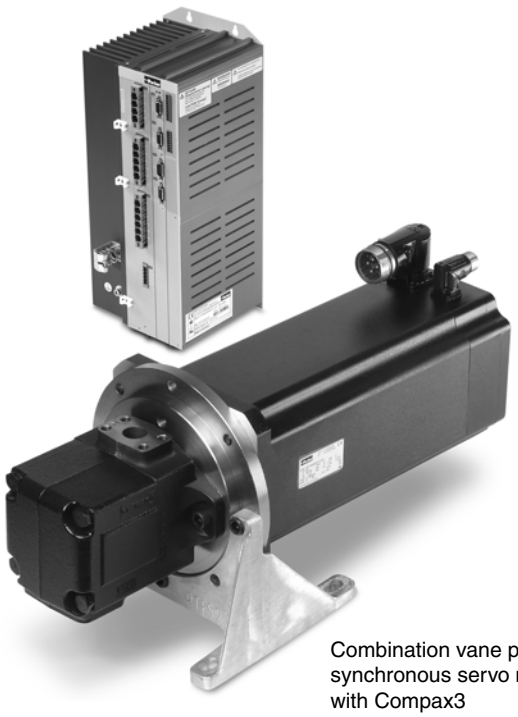

Combination vane pump/
synchronous servo motor
with Compax3



Combination vane pump/
standard asynchronous motor
with AC30V

Combination axial piston pump/
standard asynchronous motor
with AC30V



1

Components of the Drive Controlled Pump system

1. Pump

- Vane pump T7, catalogue HY29-0001, or
- Axial piston pump PVplus, catalogue HY30-3245, or
- Combination of vane pump and axial piston pump
- Mounting accessories for the motor pump assembly:
  - Coupling
  - Pump bellhousing
  - Pump flange

2. Motor

- Asynchronous standard motor or
- Synchronous servo motor, catalogue 192-061012 and 192-061013

3. AC Drive Controller

- AC30V, catalogue 192-300022
- Compax3, catalogue 192-120013

4. Accessories that may be required [1)]

- Shield connection
- Power cables
- Sensor cables
- Braking resistor
- Mains filters
- Pressure transducer

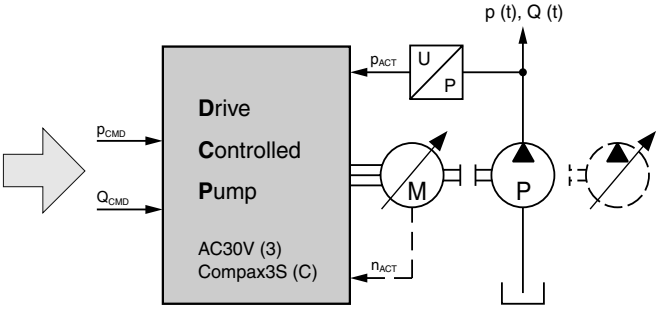

Parker DriveCreator

For optimum yet simple selection and dimensioning of the components Parker offers a unique software tool: the Parker DriveCreator. Firstly, the cycle data (pressure and flow) is entered. Subsequently, the optimum pump or combination of pumps is selected using this data, and then motor and drive suitable for the power consumption.

The Parker DriveCreator calculates the best combination of components possible with the highest degree of energy efficiency.

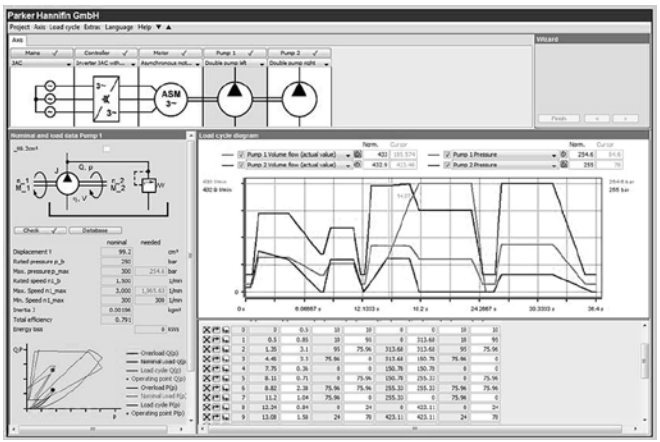

[1)] Not included in the scope of delivery.

Vane pumps

Parker vane pumps are especially suited to variable speed applications. They enable very quick changes in pressure at a very high flow rate reproducibility and at a low noise level. High operating pressures of up to 320 bar and small dimensions reduce installation costs. Reduced pressure increases life-span.

Features

- High volumetric efficiency
- Low noise design
- High mechanical efficiency (generally over 94 %)
- Wide speed range (300–3,000 rpm)
- Impervious to particle contamination thanks to the double lip design



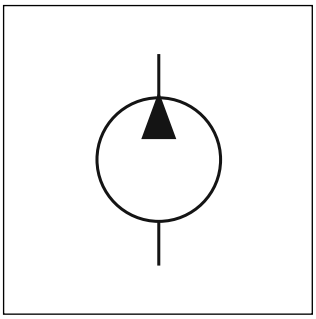

Axial piston pumps

Parker axial piston pumps are particularly characterized by their low noise level based on low-pulsation and a rigid housing. They are used if high peak pressures must be generated or high pressures must be maintained for long periods.

Features

- Low noise level
- Fast response
- Service-friendly
- High self-priming speed
- Thru drive for 100 % nominal torque



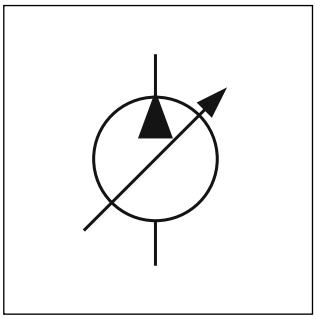

Standard asynchronous motors

The standard asynchronous motors are characterized by their versatility, robustness and high efficiency. They fulfill the IE2 efficiency standard (high efficiency), and therefore allow large energy savings and conserves the environment. The design offers maximum flexibility and minimum cost when installing.

Features

- Long life-span
- Thermistor motor protection incl.
- High overload reserves in continuous operation
- Low weight



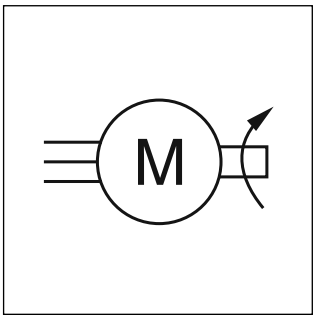

Synchronous motors

The series MH and SMB of highly dynamic, brushless synchronous motors from Parker provides generously-sized mechanical components and low inertia. Thanks to the high quality of the Neodymium-Iron-Boron magnets and the encapsulation technique used to fasten them to the shaft, they can achieve high acceleration and withstand high overload without risking the demagnetization or detachment of the magnets.

Features

- Protection class IP64
- Ambient temperature -10/+40 °C
- High power density
- Lifetime-lubricated ball bearings
- Convection cooling, fan as option available



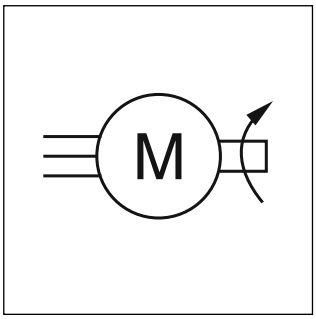

1

AC drive controller AC30V

As a central component of the Drive Controlled Pump, the AC30V series covers the entire spectrum of speed-regulated applications for asynchronous and synchronous motors. I/O-Module can be added easily if required. Modules that are required for the Drive Controlled Pump are equipped ex works.

Features

- Integrated hydraulic functions
- Integrated web server
- Sensorless vector control
- Safety torque off
- Software tool for configuration, commissioning, optimisation, programming and maintenance



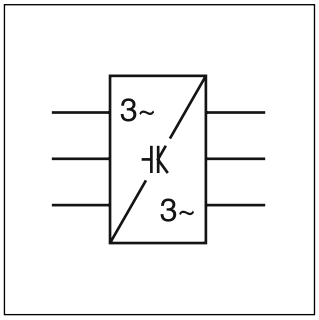

Compax3

Compax3 is Parker's global servo drive. It provides maximum openness and flexibility for the widest range of applications. As a component of the Drive Controlled Pump, it is used as drive for synchronous servo motors. A power range of 1 to 110 kVA is available. It offers modern control technology and supports the common fieldbus interfaces.

Features

- Power range of 1 to 110 kVA.
- Fieldbus communication with open standards
- Extensive safety technology
- Commissioning software



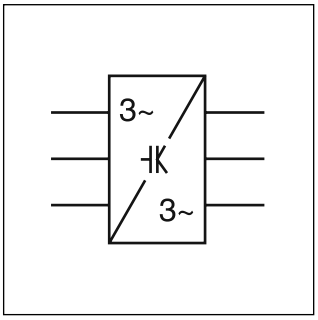

Control Valves

For the 3 performance classes different valve series are used. Starting with standard proportional valves for simple closed loop solutions to highly sophisticated DFplus valves in performance class 3.

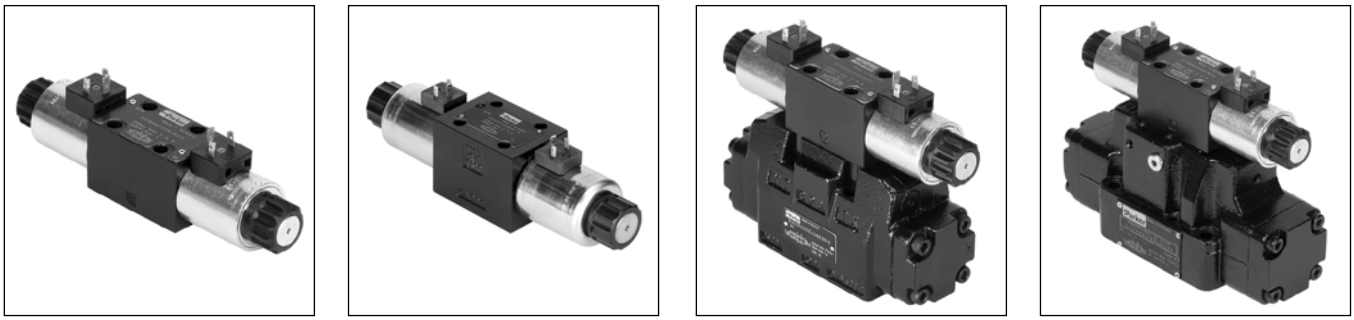

Performance class 1: D*FB series

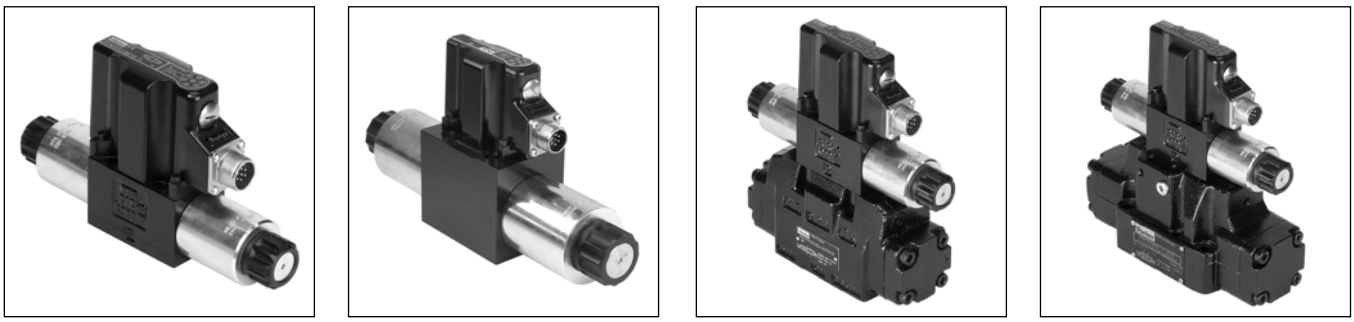

Performance class 2: D*FB OBE series

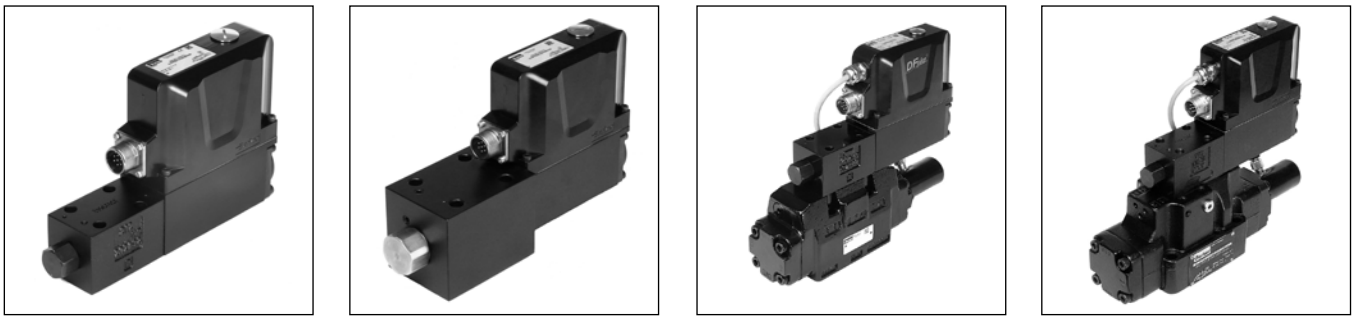

Performance class 3: D*FP series

Controllers

Optionally the axes can be ordered with controller. In performance class 1 the axes are controlled by Parker digital modules, in classes 2 and 3 the highly sophisticated Compax 3F controller is used.



Performance class 1: PWDXX digital module



Performance classes 2 and 3: Compax3F axis controller

Explosion-Proof Valves

Parker has expanded the range of applications for its explosion-proof industry hydraulic valves. All series are not only ATEX certified but also equipped with IECEx compliant solenoids.

Parker has certified the solenoids of these explosion-proof directional control valves in accordance with IECEx standard for equipment class 2G, as well ensuring ATEX compliance. Both the performance characteristics and the dimensions are identical to the values of the previous versions, so that the valves can also easily be used as a replacement in existing systems.

All valves offered in this chapter are ATEX certified for usage in zone 1 and 2.

The Explosion-Proof Valves Catalogue HY11-3343/UK contains further product information and the ordering codes.

In the following we give you a short overview of our range of explosion-proof valves.



Directional control valve, series D1VW explosion proof

The D1VW with explosion proof solenoids is the ATEX version of the standard D1VW series. It provides high functional limits up to 60l/min in combination with a very low, energy-saving pressure drop. All explosion proof solenoids are DC design. The valves for AC operate with integrated rectifier.

Further information about this valve can be found in chapter 2.

Pilot operated directional control valve, series D*W*EE explosion proof

The D*1*W*EE with explosion proof solenoids is based on the standard D*1*W series. The pilot operated valves are available in 4 sizes from NG10 to NG32. All of them are piloted by a D1VW valve. All explosion proof solenoids are DC design. The valves for AC operate with integrated rectifier.

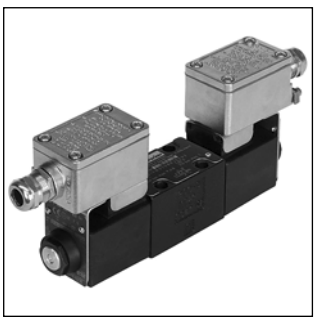

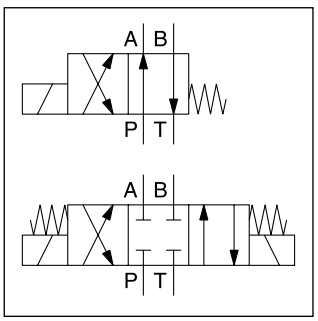

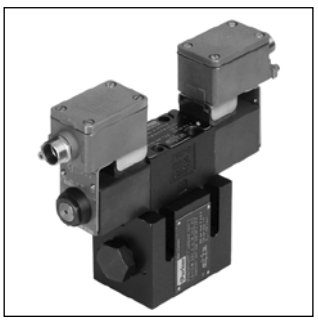

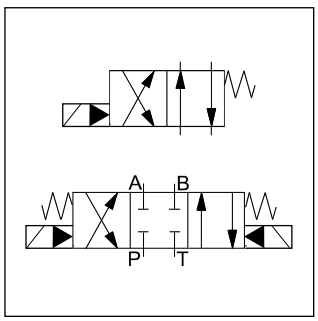

Direct operated proportional DC valve, series D1FB*EE explosion proof

The D1FB*EE series with explosion proof solenoids is the ATEX version of the standard D1FB series. The parameters can be saved, changed and duplicated in combination with the digital power amplifier PWD00A-400 (to be used in an explosion proof cabinet or outside of the hazardous area).

Features

- Spool/sleeve and spool/body
- High repeatability from valve to valve
- Low hysteresis
- Manual override



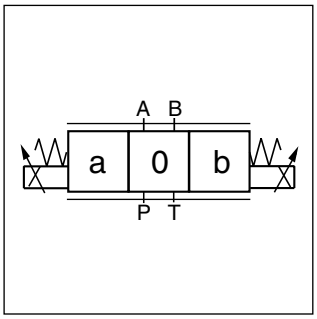

Pilot operated proportional DC valve, series D*1FB*EE explosion proof

The D*1FB*EE series with explosion proof solenoids is the ATEX certified version of the standard D*1FB series. The valves work with barometric feedback of the main stage to the pressure reducing pilot valve. The parameters can be saved, changed and duplicated in combination with the digital power amplifier PWD00A-400 (to be used in an explosion proof cabinet or outside of the hazardous area).

Features

- Progressive flow characteristics for sensitive adjustment of flow rate
- High flow capacity
- 4 sizes, NG10 to NG32

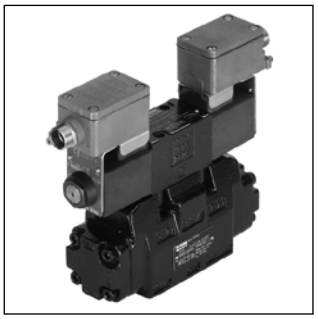

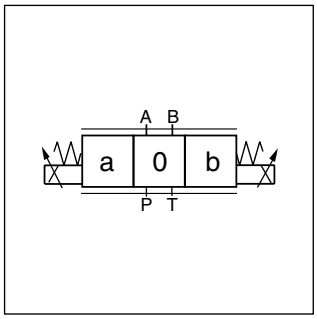

Proportional pressure reducing valve, series D1FV*EE explosion proof

The D1FV*EE series with explosion proof solenoids is based on the standard D1FV series. In combination with the digital power amplifier PWD00A-400 (to be used in an explosion proof cabinet or outside of the hazardous area), the parameters can be saved, changed and duplicated. The D1FV values control the pressure in the A- or B-ports using the barometric feedback principle.

Features

- Barometric feedback
- High repeatability from valve to valve
- Low hysteresis
- Manual override



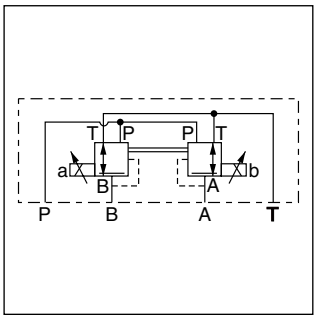

Position Paper of HCD regarding machinery directive 2006/42/EG DIN EN ISO 13849

Products made by the Hydraulic Controls Division (HCD) of Parker Hannifin GmbH are excluded from the scope of the machinery directive following the „*VDMA Position Paper on the Implementation of the Machinery Directive 2006/42/EC in the Fluid Power Industry*“ (Rev. 23.06.2010).

The only exceptions are products that comply to the definition of a safety component, defined in article 2 c) of the machinery directive.

All HCD products are designed and manufactured considering the basic as well as the proven safety principles according to EN 13849-2:2012, so that the machines in which the products are incorporated meet the essential health- and safety requirements.

Components that fall within the scope of DIN EN ISO 13849-1, *Safety of machinery – Safety related components of controls – part 1: General principles for design* do not necessarily have to be placed on the market as safety components in accordance with the machinery directive.
A component that is placed on the market but not as a safety component does not necessarily provide a lower safety level.

Confirmations for components to be proven components, e. g. for validation of hydraulic systems, can only be provided after an analysis of the specific application, as the fact to be a proven component mainly depends on the specific application.

$MTTF_d$ values for our products are part of the technical data within our catalogue.

$B10_d$, DC and CCF values depend on cycle time, running time and system design. Therefore they can only be provided application specific.

g.f. 14.11.2014

Position Paper Machinery Directive 2006/42/EG „safety components“

Parker Hannifin GmbH confirms, that our safety components comply with the machinery directive 2006/42/EC, as long as they are used as intended. The EC Declaration of conformity includes possible conformity to other directives as well.

Safety components are:

Pressure relief valves according to directive 97/23/EG

Type R4V*V , R4V*W
Type R6V*V, R6V*W
Type DSDU 578 P20E TÜV
Type DSDU 1078 E*E TÜV

Intended usage:

Pilot operated pressure relief valves to limit a maximum pressure, pre-adjusted unchangeable to this maximum pressure.
The intended usage is provided as long as the valves are integrated into the system as follows:

- P-port connected directly to the point where the pressure should be limited
- T-port connected directly to tank without any backpressure

Size of the valve and the pipes have to be matched to the maximum possible flow and pressure.

Clamping valves according to EN 201:2010

2-way-slip in cartridges	**Type C10C1 E-SC, C10C3 E-SC**
	Type C13-DEC 107-SC, C18-DEC 107-SC
Direct operated directional control valves NG6	**Type D1VW*-SC, D1DW*-SC;**
Direct operated directional control valves NG10	**Type D3W*-SC, D3DW*-SC**
Pilot operated directional control valves NG10	**Type D31DW*-SC**
Pilot operated directional control valves NG16	**Type D41VW*-SC**
Pilot operated directional control valves NG25	**Type D81VW*-SC, D91VW*-SC**

Intended usage:

For hydraulically operated clamping units of injection molding machines according to the manufacturer's declaration of incorporation.

Press controls according to DIN EN 693:2011

Press control NG06	**Type PADZ2780.3xx-SC**
Press control NG10	**Type PADZ2781.3xx-SC**
Press control NG16	**Type PADZ2782.3xx-SC**
Press control NG25	**Type PADZ2783.3xx-SC**
Press control NG50	**Type PADZ2784.3xx-SC**
Press control NG10	**Typ PPCC10*-SC**
Press control NG16	**Typ PPCC16*-SC**
Press control NG25	**Typ PPCC25*-SC**

Intended usage:

To be incorporated into hydraulic presses according to DIN EN 693:2011.

Declaration of conformity is valid from 29.12.2009 for all new above listed products. For earlier delivered products conformity is not possible to declare.

The declaration of product conformity does not include a declaration of conformity for the machinery in which our product is incorporated. The conformity for the machinery only can be declared by the person who places the machinery on the market inside the EU for the first time.

If the listed components are incorporated in already used machinery (placed on the market before 1995) and if they do not change the function of this machinery significantly, the machinery must not be put into operation until the conformity of the machinery to national regulations, especially safety regulations, is declared.

If the function of the machinery is changed significantly, conformity to the machinery directive 2006/42/EC has to be declared.

A declaration of conformity according to machinery directive 2006/42/EC for other Parker products has to be proved depending on the special application.

g.f. 05.07.2016

Notes

Series	Description	Direct operated					Pilot operated				Page
	DIN / ISO	06	10	16	25	32	10	16	25	32	
	Seat valves, electrically operated										
D1SE		•									2-2
	Spool valves, electrically operated										
D1VW	Standard, soft shift	•									2-5
D1VW	8 Watt solenoid	•									2-13
D1VW	Inductive position control	•									2-19
D1VW	Explosion proof (conform to ATEX and IECEx)	•									2-28
D1MW	For wash down applications	•									2-33
D3W	Standard		•								2-39
D3W	Inductive position control		•								2-46
D3MW	For wash down applications		•								2-55
D31DW	Standard and position control						•				2-61
D31NW	Highest flow						•				
D41VW	Standard and inductive position control							•			
D81/91VW	Standard and inductive position control								•		
D111VW	Standard and inductive position control									•	
	Spool valves, electrically operated, regenerative and hybrid design										
D3DWR	Hybrid configuration with sandwich plate		•								2-74
D31NWR	Hybrid configuration with sandwich plate						•				
D41VWR/Z								•			
D91VWR/Z									•		
D111VWR/Z										•	
	Spool valves, hydraulically operated										
D1VP		•									2-85
D3DP			•								
D4P				•							
D9P					•						
D11P						•					
	Spool valves, pneumatically operated										
D1VA		•									2-96
	Spool valves, mechanically operated										
D1VL		•									2-100
D3DL			•								
D4L				•							
D9L					•						
	Accessories										
	Plugs										2-111
	Actuator kits										2-112
	O-rings and seal kits										2-113
	Slip-in orifices										2-114
	Mounting patterns										2-115

2

The directional valve type D1SE is equipped with a wet pin armature solenoid, drain free tapered poppet and compatible with the standards DIN NG06, CETOP 03, and NFPA D03. Due to the 3/2-way design, port A is either connected with P or discharged in the tank. The neutral position (solenoid not activated) is taken automatically by a return spring. This position remains until the solenoid is energized.

The valve poppet including activation lever and the armature of the solenoid are located in the pressurized oil chamber of connection T. The valve poppet is designed such that there can be no differential area in its axial operational direction (opening, closing). Thus it is statically pressure-balanced so that the valve can be switched in both flow directions even under pressure.

The unit has an all-steel design, the important functional inner parts are hardened, the poppet and seat are grinded.



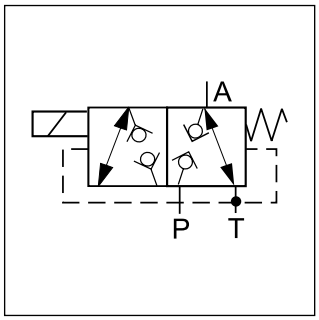

Ordering code

D	1	S	E		B			W	
Directional control valve	Size DIN NG06 CETOP 03 NPPA D03	Seat valve	Wet pin armature solenoid, flanged	Spool type	Style	Seals	Solenoid voltage	Connector as per EN 175301-803 without plug [1]	Design series (not required for ordering)

Code	Spool type
30	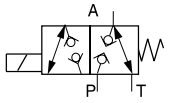
83	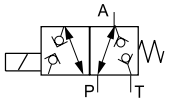

Code	Voltage
K	12 V=
J	**24 V=**
U [2]	98 V=
G [2]	205 V=

Code	Seals
N	**NBR**
V	FPM

Bold letters =
Short-term availability

Solenoids for repair

Voltage	Ordering code
12 V=	7329700 - 12 V
24 V=	7329700 - 24 V
98 V=	7329700 - 98 V
205 V=	7329700 - 205 V

[1] Please order plug separately.

[2] To be used in combination with rectifier plugs at 120 VAC / 230 VAC power supply.

2

General					
Design		Directional poppet valve			
Actuation		Solenoid			
Size		DIN NG6 / CETOP 03 / NFPA D03			
Mounting interface		DIN 24340 A6 / ISO 4401 / CETOP RP 121-H / NFPA D03			
Mounting position		Unrestricted, preferably horizontal			
Ambient temperature	[°C]	-25...+60, observe permissible duty cycle			
$MTTF_D$ value	[years]	150			
Weight	[kg]	1.5			
Hydraulic					
Max. operating pressure	[bar]	P, A, T: 350			
Fluid		Hydraulic oil according to DIN 51524			
Fluid temperature	[°C]	-20...+60 (NBR: -25...+70)			
Viscosity permitted	[cSt] / [mm²/s]	10...500			
Viscosity recommended	[cSt] / [mm²/s]	30...80			
Filtration		ISO 4406 (1999); 18/16/13			
Flow max.	[l/min]	20			
Static / Dynamic					
Step response	[ms] [ms]	Energized: approx. 50 De-energized: approx. 60			
Electrical characteristics					
Duty ratio		See diagram			
Max. switching frequency	[1/h]	2000			
Protection class		IP65 in accordance with EN 60529 (with correctly mounted plug-in connector)			
	Code	K	J	U	G
Supply voltage	[V]	12 V =	24 V =	98 V =	205 V =
Tolerance supply voltage	[%]	±10	±10	±10	±10
Current consumption	[A]	1.95	1.1	0.25	0.13
Power consumption	[W]	23.4	26.4	24.3	26.6
Solenoid connection		Connector as per EN 175301-803			
Wiring min.	[mm²]	3 x 1.5 recommended			
Wiring length max.	[m]	50 recommended			

With electrical connections the protective conductor (PE ⏚) must be connected according to the relevant regulations.

Performance curve Δp-Q

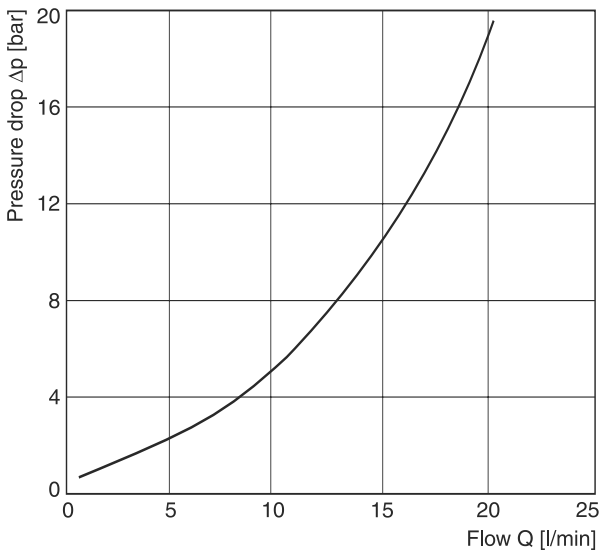

Duty cycle versus ambient temperature

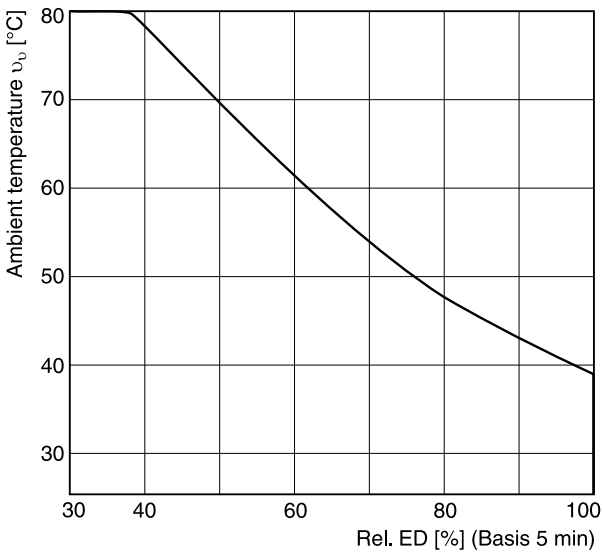

All characteristic curves measured with HLP46 at 50 °C.

2

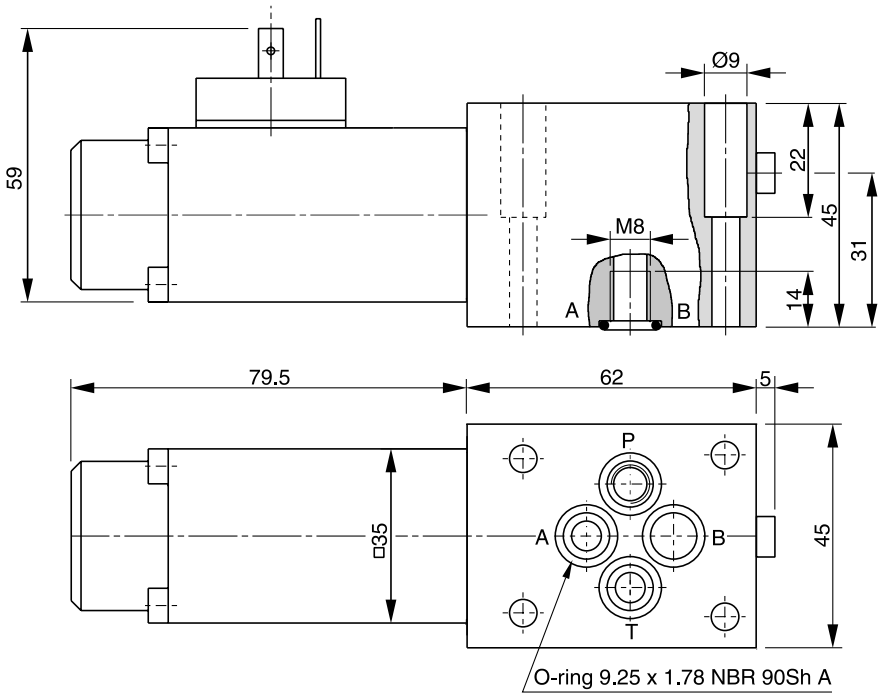

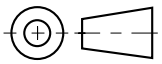

Surface finish	Kit			Kit
R_{max}6.3 ⏥ 0.01/100	BK375	4x M5x30 ISO 4762-12.9	7.6 Nm ±15 %	**NBR: SK-D1SE-70** FPM: DK-D1SE-V70

Subplates and manifolds see chapter 12.

The space necessary to remove the plug per EN 175301-803, design type AF is at least 15 mm.
The torque for the screw M3 of the plug has to be 0.5 to 0.6 Nm.

The NG06 directional control valve series D1VW provides high functional limits up to 80 l/min in combination with a very low, energy-saving pressure drop.

A wide variety of spool options allows to design an unlimited number of hydraulic circuits.

Versions with 8 watt coils, position control, ATEX approval, surface protection and connector variants are shown in the following chapters.

The valve is also available as sandwich type, see series Z1DW in chapter 7.

Valves with explosion proof solenoids Ex e mb ll see series D1VW Explosion Proof in chapter 2 and catalogue MSG11-3343/UK.

Download of the PDF file at www.parker.com/ISDE, see “Support”.



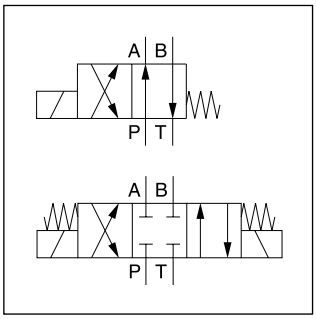

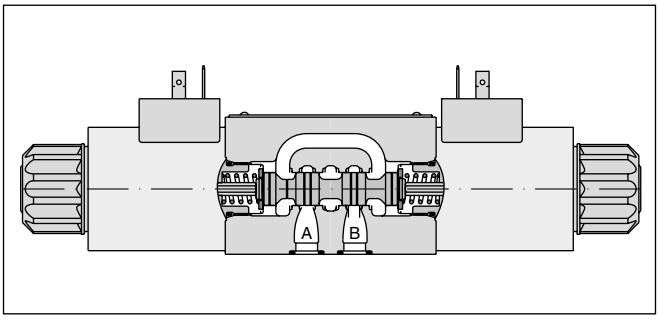

Technical data

General							
Design		Directional spool valve					
Actuation		Solenoid					
Nominal size		DIN NG06 / CETOP 03 / NFPA D03					
Mounting interface		DIN 24340 A6 / ISO 4401 / CETOP RP 121-H / NFPA D03					
Mounting position		unrestricted, preferably horizontal					
Ambient temperature	[°C]	-25...+60					
$MTTF_D$ value	[years]	150					
Weight	[kg]	1.5 (1 solenoid), 2.1 (2 solenoids)					
Vibration resistance	[g]	10 Sinus 5...2000 Hz acc. IEC 68-2-6 30 Random noise 20...2000 Hz acc. IEC 68-2-36 15 Shock acc. IEC 68-2-27					
Hydraulic							
Max. operating pressure	[bar]	P, A, B: 350; T: 210 (DC), T: 140 (AC)					
Fluid		Hydraulic oil according to DIN 51524					
Fluid temperature	[°C]	-20 ... +70 (NBR: -25...+70)					
Viscosity permitted	[cSt] / [mm²/s]	2.8...400					
Viscosity recommended	[cSt] / [mm²/s]	30...80					
Filtration		ISO 4406 (1999); 18/16/13					
Flow max.	[l/min]	80 (see shift limits)					
Leakage at 50 bar	[ml/min]	Up to 10 per flow path, depending on spool, up to 15 per flow path for spool type 008 + 009					
Static / Dynamic							
Step response		see table response time					
Electrical characteristics							
Duty ratio	[%]	100 ED; CAUTION: coil temperature up to 150 °C possible					
Max. switching frequency	[1/h]	15000 (not for soft shift)					
Protection class		IP65 in accordance with EN 60529 (with correctly mounted plug-in connector)					
	Code	K	J	U	G	Y	T
Supply voltage	[V]	12 V =	24 V =	98 V =	205 V =	110 V at 50 Hz/ 120 V at 60 Hz	230 V at 50 Hz/ 240 V at 60 Hz
Tolerance supply voltage	[%]	±10	±10	±10	±10	±5	±5
Current consumption hold	[A]	2.72	1.29	0.33	0.13	0.6 / 0.55	0.3 / 0.27
Current consumption in rush	[A]	2.72	1.29	0.33	0.13	2.5 / 2.4	1.25 / 1.2
Power consumption hold		32.7 W	31 W	31.9 W	28.2 W	70 / 70 VA	70 / 70 VA
Power consumption in rush		32.7 W	31 W	31.9 W	28.2 W	280 / 290 VA	280 / 290 VA
Solenoid connection		Connector as per EN 175301-803, solenoid identification as per ISO 9461 (code W).					
Wiring min.	[mm²]	3 x 1.5 recommended					
Wiring length max.	[m]	50 recommended					

With electrical connections the protective conductor (PE ⏚) must be connected according to the relevant regulations.

2

D	1	V	W		
Directional control valve	**Size DIN NG06 CETOP 03 NFPA D03**	**3-chamber valve**	**Wet pin armature solenoid, threaded in tube**	**Spool type**	**Spool position**

3 position spools	
Code	Spool type a 0 b
001	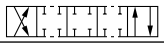
002	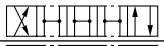
003	
004	
005	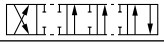
006	
007	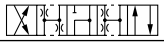
008 [1]	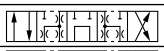
009 [1]	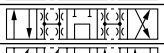
010	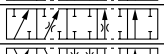
011	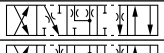
014	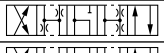
015	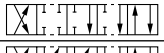
016	
021	
022	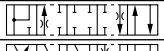
031	
032	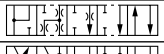
034	
035	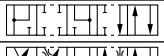
061	
081	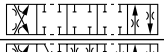
082	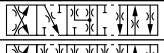
102	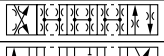
204 [1]	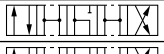
205 [1]	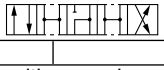

2 position spools	
Code	Spool type a b
020	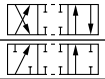
026	
030	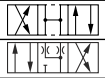
083 [1]	
101	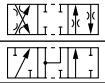
208	

3 position spools			
Code	Spool position		
C	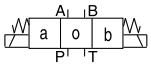		**3 positions.** **Spring offset in position “0“.** **Operated in position “a“ or “b“.**
	Standard	Spool type 008,009, 204, 205	
E	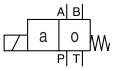 **Operated in position “a“.**	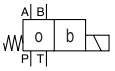 **Operated in position “b“.**	**2 positions.** **Spring offset in position “0“.**
F	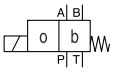 Spring offset in position “b“.	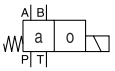 Spring offset in position “a“.	2 positions. Operated in position “0“.
K	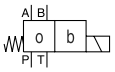 **Operated in position “b“.**	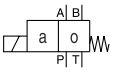 **Operated in position “a“.**	**2 positions.** **Spring offset in position “0“.**
M	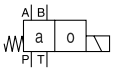 Spring offset in position “a“.	Spring offset in position “b“.	2 positions. Operated in position “0“.

2 position spools			
Code	Spool position		
	Standard	Spool type 083	
B			**2 positions.** **Spring offset in position “b“.** **Operated in position “a“.**
D			**2 positions.** **Operated in position “a“ or “b“.** **No center or offset position.**
H			**2 positions.** **Spring offset in position “a“.** **Operated in position “b“.**

[1] Consider specific spool position.

[2] To be used in combination with rectifier plugs at 120 VAC / 230 VAC power supply.

[3] DC only

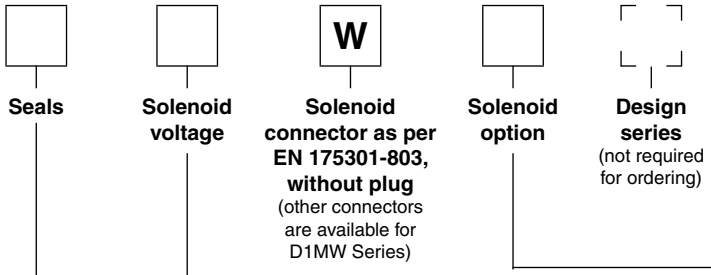

Code	Solenoid option
omit	**manual override (standard)**
T	without manual override
S2 [3]	Soft shift orifice size 0.5 mm.
S3 [3]	Soft shift orifice size 0.75 mm.
4N [3]	with lockable manual override

Code	Voltage
K	**12 V =**
J	**24 V =**
U [2]	98 V =
G [2]	205 V =
Y	110 V 50 Hz / 120 V 60 Hz
T	230 V 50 Hz / 240 V 60 Hz

Code	Seals
N	**NBR**
V	FPM

Bold letters =
Short-term availability

Further spool types, solenoid voltages and connectors on request.

2

Flow curve

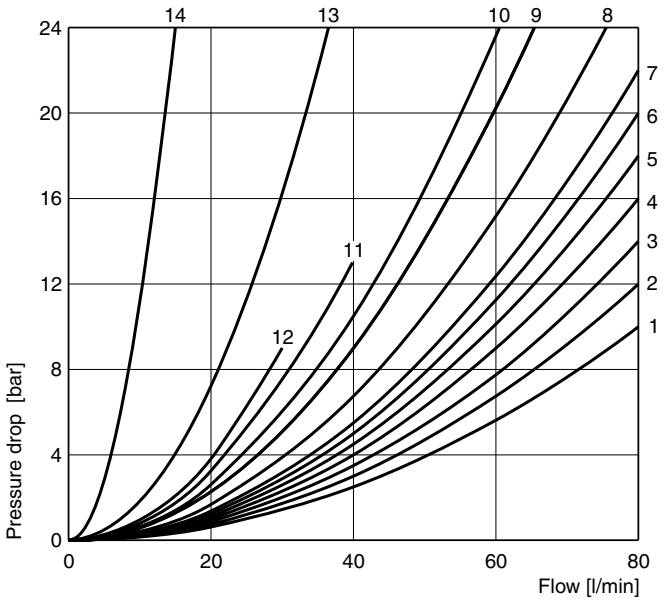

All characteristic curves measured with HLP46 at 50 °C.

	Position "b"			Position "a"			Position "0"				
Spool	P-A	B-T	P-B	P-B	A-T	P-A	P-A	P-B	A-T	B-T	P-T
001	2	2		2	2						
002	1	4		1	4		1	1	5	5	2
003	3	4		3	6				7		
004	2	3		2	3				7	7	
005	2	2		2	2		12				
006	1	4		1	4		7	7			
007	3	2		2	2			3		2	7
010	3			3							
011	2	2		2	2				14	14	
014	3	2		2	2		3		2		7
015	3	6		3	4					7	
016	2	2		2	2			12			
020B	4	4		2	3						
026B	4			4							
030B	2	3		1	2						
034	4		8	3	3				5	7	
035	3	3		4		8			7	5	
081	13	13		13	13						
082	13	13		13	13				[1]	[1]	
101B	11	10		10	9						
102	1	4		1	4		5	5	8	8	6
61	1	3		1	3		3	2			
83H	5	2		5	2						
208	3			2							
	P-B	A-T		P-A	B-T		P-A	P-B	A-T	B-T	P-T
008	4	5		4	5						9
009	5	5		6	7						7
83B	5	2		5	2						
204	1	3		4	3		7		4		7
205	4	3		1	3			7		4	5

	Position "b"			Position "a"		
Spool	P-A	P-B	A-B	P-B	A-T	
021	2	4		4	2	
	P-A	B-T		P-A	P-B	A-B
022	6	2		5	2	

[1] Only for pressure compensation, no high flow possible.

The diagram below specifies the shift limits for valves with DC & AC solenoids. Valves with spool position “F” or “M” can only be operated up to 70 % of the limits. The specifications apply to a viscosity of 40 mm²/s and balanced flow conditions. The shift limits can be considerably lower at unbalanced flow conditions. To avoid flow rates beyond the shift limits, a plug-in orifice can be inserted in the P-port.

Valve with standard DC solenoid

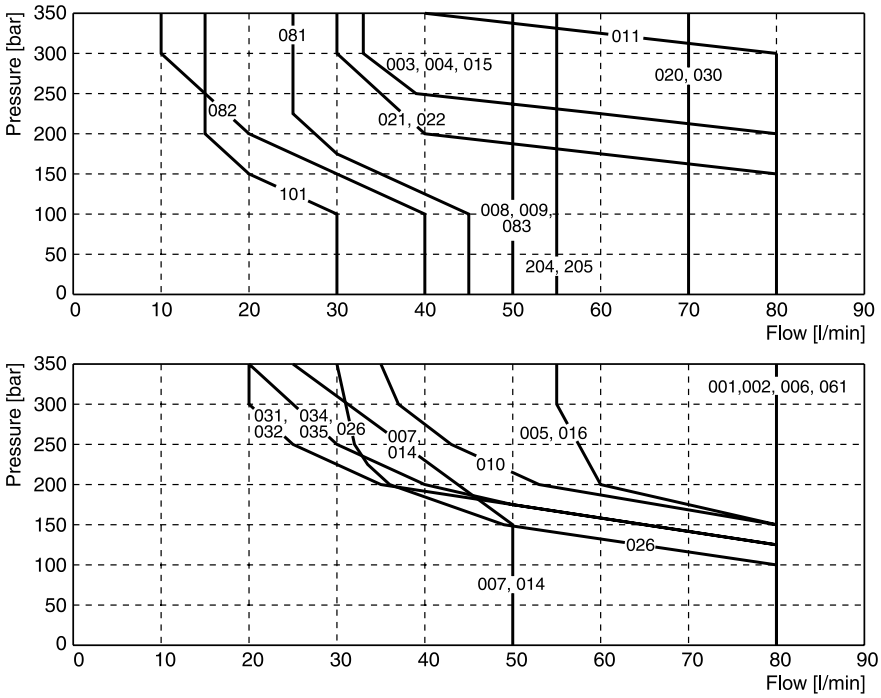

Measured with HLP46 at 50 °C, 90 % U_{nom} and warm solenoids

Valve with standard AC solenoid

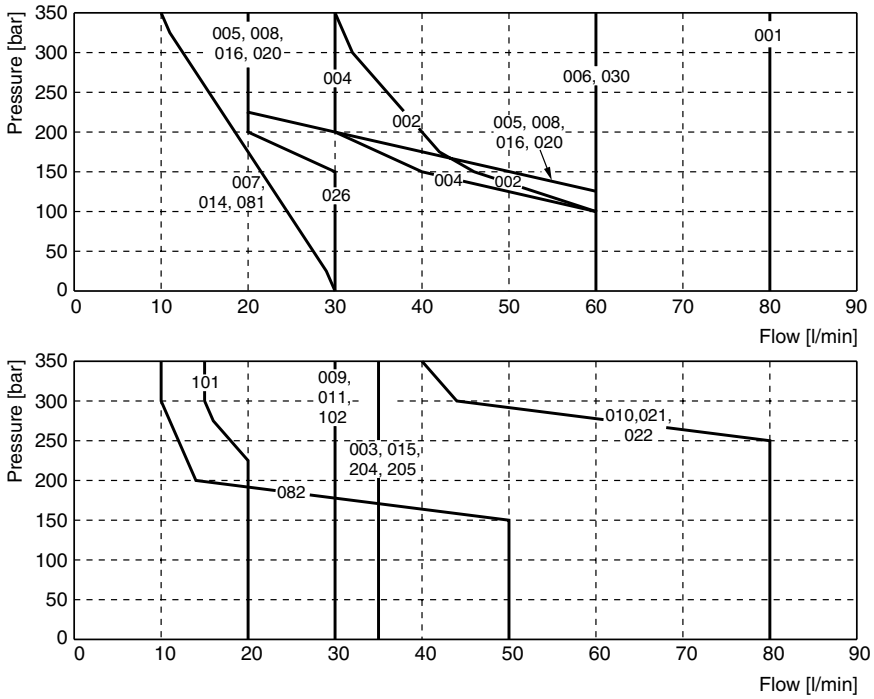

Measured with HLP46 at 50 °C, 95 % U_{nom} and warm solenoids

2

Shift limit diagram - Soft shift with 1 DC solenoid

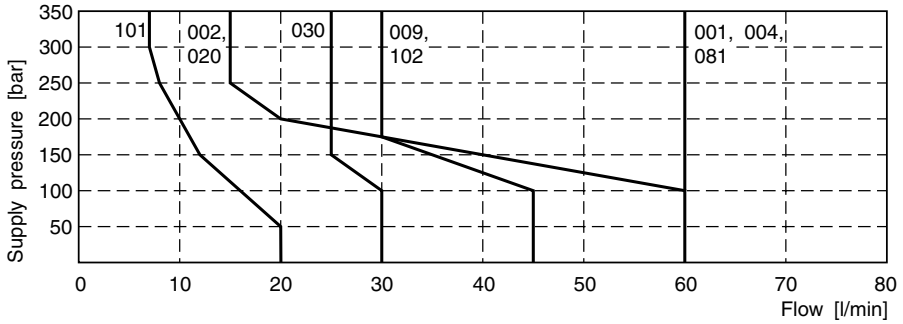

Shift limit diagram - Soft shift with 2 DC solenoids

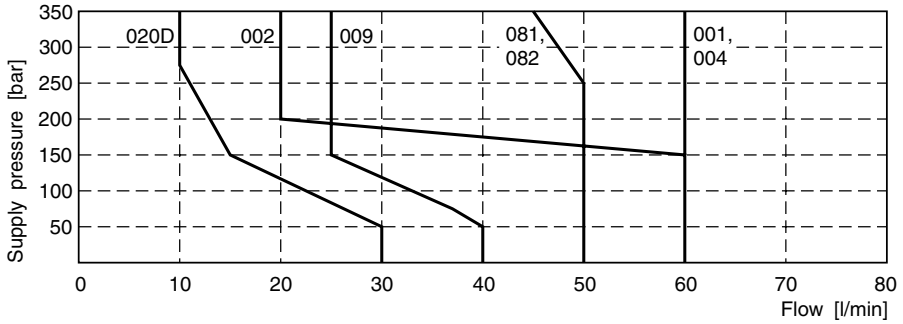

Measured with HLP46 at 50 °C, 90 % U_{nom} and warm solenoids.

Response times D1VW Standard and Soft Shift [ms]

Standard solenoid	Orifice	Energize	De-energize
Standard DC	w/o	45 - 60	20 - 30
Standard AC	w/o	13	20
Standard DC with rectifier plug	w/o	60 -70	70- 90

Response times soft shift		2 solenoid valve 3 positions		2 solenoid valve 3 positions		1 solenoid valve 2 positions	
Code	Orifice size	Center position: Closed		Center position: Open			
		Energize	De-energize	Energize	De-energize	Energize	De-energize
S2	0.50 mm	200 - 750	310 - 650	220 - 400	350 - 750	90 - 350	160 - 500
S3	0.75 mm	180 - 300	300 - 400	200 - 350	300 - 500	90 - 350	130 - 350

The lower value applies to small flow rates and low pressure, the upper value to high flow rates and high pressure.

Step response times were obtained under the following conditions: HLP46 at 50 °C with the valve operating at nominal pressure and flow. Published response times are nominal and may vary with spool, flow, pressure and temperature.

Acceleration for orifice size 0.75, code “S3” (measured against a standard valve)

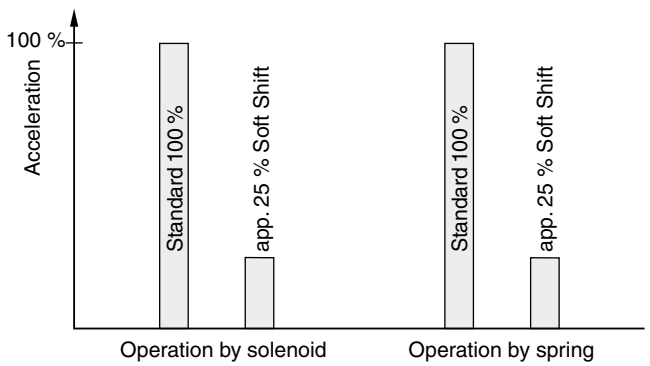

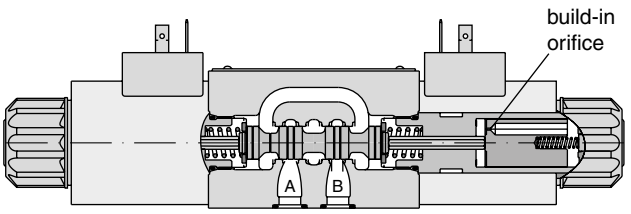

For even softer shifting, the proportional spools 081, 082, 101 and 102 can be used.

Interface EN 175301-803, DC solenoid
B, E, F -style

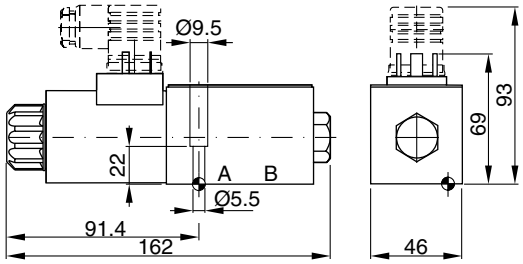

H, K, M -style

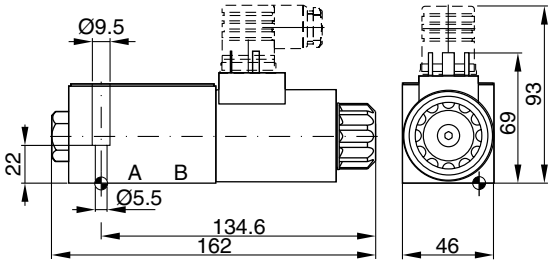

C, D -style

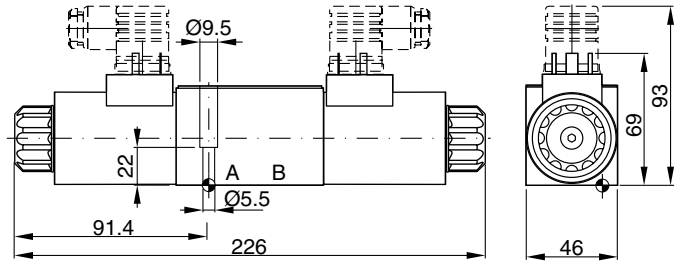

Option 4N, with lockable manual override
(available for all styles, DC only)

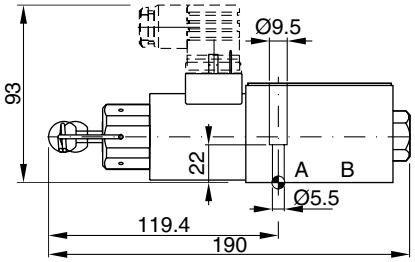

Interface EN 175301-803, AC solenoid
B, E, F -style

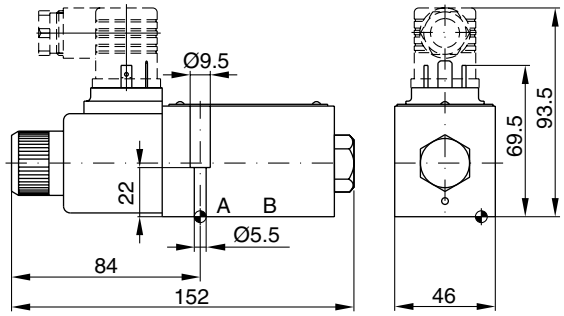

H, K, M -style

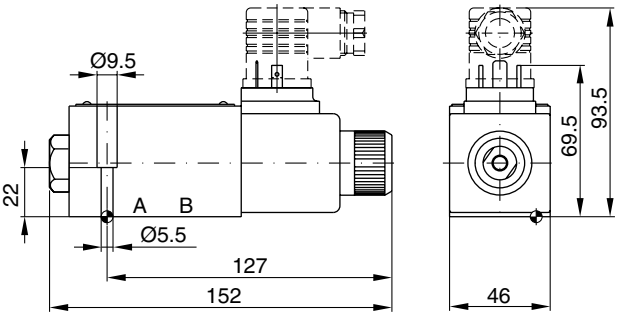

C, D -style

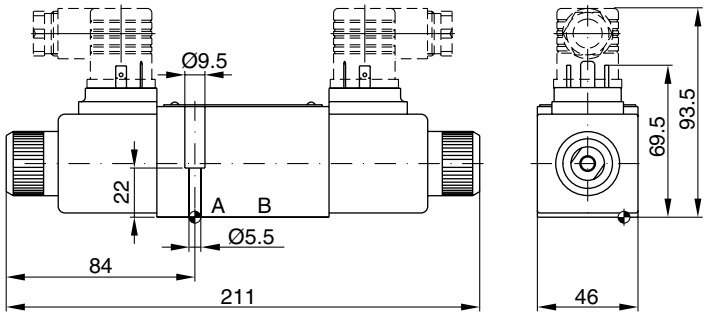

Surface finish	Kit			Kit
R_{max}6.3 ⏥ 0.01/100	BK375	4x M5x30 ISO 4762-12.9	7.6 Nm ±15 %	NBR: SK-D1VW-N-91 FPM: SK-D1VW-V-91

The space necessary to remove the plug per EN 175301-803, design type AF is at least 15 mm.
The torque for the screw M3 of the plug has to be 0.5 to 0.6 Nm.

The D1VW 8 Watt series is based on the standard D1VW design. The low watt, low current (<0.5 A) solenoid allows direct connection to a PLC or a bus knot. The valves are offered with standard solenoid connection (as per EN175301-803) and M12 x 1 connection. The version with M12 x 1 connection and LEDs is conform to the DESINA standard (**D**istribut**E**d and **S**tandardised **IN**st**A**llation technology) for machine tools and manufacturing systems.



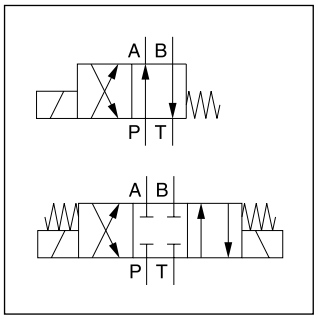

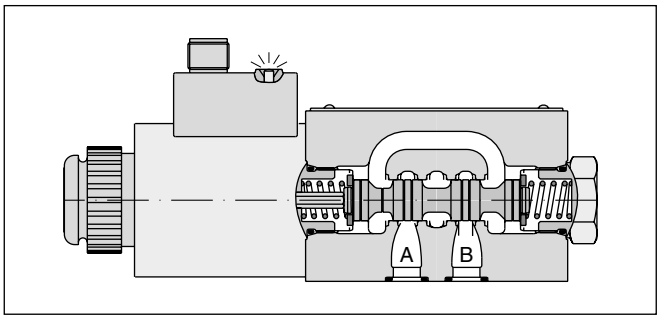

Technical data

General		
Design		Directional spool valve
Actuation		Solenoid
Size		DIN NG06 / CETOP 03 / NFPA D03
Mounting interface		DIN 24340 A6 / ISO 4401 / CETOP RP 121-H / NFPA D03
Mounting position		unrestricted, preferably horizontal
Ambient temperature	[°C]	-25...+60
$MTTF_D$ value	[years]	150
Weight	[kg]	1.5 (1 solenoid), 2.1 (2 solenoids)
Vibration resistance	[g]	10 Sinus 5...2000 Hz acc. IEC 68-2-6 30 Random noise 20...2000 Hz acc. IEC 68-2-36 15 Shock acc. IEC 68-2-27
Hydraulic		
Max. operating pressure	[bar]	P, A B: 350, T: 210
Fluid		Hydraulic oil according to DIN 51524
Fluid temperature	[°C]	-20 ... +70 (NBR: -25...+70)
Viscosity permitted	[cSt] / [mm²/s]	2.8...400
Viscosity recommended	[cSt] / [mm²/s]	30...80
Filtration		ISO 4406 (1999); 18/16/13
Flow max.	[l/min]	60 (see shift limits)
Leakage at 50 bar	[ml/min]	Up to 10 per flow path, depending on spool
Static / Dynamic		
Step response at 95 %	[ms]	Energized: 80...120; De-energized: 35...55
Electrical characteristics		
Duty ratio		100 % ED; CAUTION: coil temperature up to 70 °C possible
Max. switching frequency	[1/h]	10000
Protection class		IP65 in acc. with EN 60529, M12x1 IP67 (each with correctly mounted plug-in connector)
	Code	J
Supply voltage	[V]	24 V =
Tolerance supply voltage	[%]	±10
Current consumption	[A]	0.33
Power consumption	[W]	8
Solenoid connection		Connector as per EN 175301-803, solenoid identification as per ISO 9461 (code W). Plug M12x1 on coil as per IEC 61076-2-101 (code D).
Wiring min.	[mm²]	3 x 1.5 recommended
Wiring length max.	[m]	50 recommended

With electrical connections the protective conductor (PE ⏚) must be connected according to the relevant regulations.

2

D	1	V	W		
Directional control valve	**Size DIN NG06 CETOP 03 NFPA D03**	**3-chamber valve**	**Wet pin solenoid**	**Spool type**	**Spool position**

3 position spools	
Code	Spool type a 0 b
001	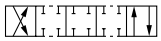
002	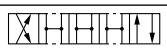
003	
004	
005	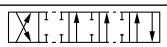
006	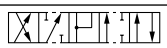
007	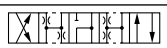
008 [1]	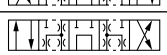
009 [1]	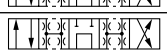
010	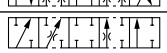
011	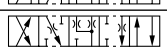
014	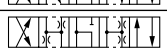
015	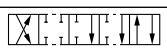
016	
081	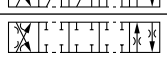
082	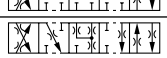
102	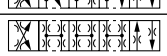

2 position spools	
Code	Spool type a b
020	
026	
030	
101	

3 position spools			
Code	Spool position		
C	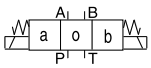		**3 positions. Spring offset in position “0“. Operated in position “a“ or “b“.**
	Standard	Spool type 008, 009	
E	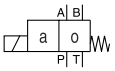 Operated in position “a“.	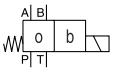 Operated in position “b“.	2 positions. Spring offset in position “0“.
K	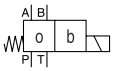 Operated in position “b“.	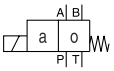 Operated in position “a“.	2 positions. Spring offset in position “0“.

2 position spools		
Code	Spool position	
B	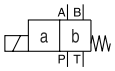	**2 positions. Spring offset in position “b“. Operated in position “a“.**
D [2]	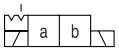	**2 positions. Operated in position “a“ or “b“. No center or offset position.**
H	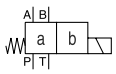	**2 positions. Spring offset in position “a“. Operated in position “b“.**

[1] Consider specific spool position.

[2] Only for spool 020 available.

[3] Please order plug separately.

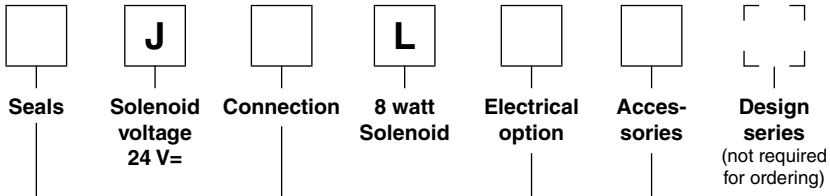

Code	Accessories
omit	**Standard valve (in combination with solenoid connection "D" and "W")**
5	Always in combination with electrical option „J"

Solenoid identification acc. to ISO 9461

Code	Electrical option
omit	**M12 connector in combination with solenoid connection "D" and "W", see „Pin Assignment"**
J	M12 connector in combination with solenoid connection "D", see "Pin Assignment"

Code	Connection
D [3)]	Connector M12x1 as per IEC 61076-2-101
W [3)]	**Connector as per EN 175301-803**

Code	Seals
N	**NBR**
V	FPM

Bold letters =
Short-term availability

Further spool types on request.

To get a DESINA valve, order the combination: JDLJ5.

The flow curve diagram shows the flow versus pressure drop curves for all spool types. The relevant curve number for each spool type, operating position and flow direction is given in the table below.

	Position „b“		Position „a“		Position „0“				
Spool	P ->A	B->T	P->B	A->T	P->A	P->B	A->T	B->T	P->T
001	3	3	3	3	–	–	–	–	–
002	3	4	3	4	1	1	3	3	1
003	4	4	4	5	–	–	4	–	–
004	3	4	3	4	–	–	4	4	–
005	3	3	3	3	8 (max. 30l)	–	–	–	–
006	3	4	3	4	4	4	–	–	–
007	4	3	3	3	–	2	–	1	4
010	4	–	4	–	–	–	–	–	–
011	3	3	3	3	–	–	11 (max. 25l)	11 (max. 25l)	–
014	4	3	3	3	2	–	1	–	4
015	4	5	4	4	–	–	–	4	–
016	3	3	3	3	–	8 (max. 30l)	–	–	–
020B	4	4	3	4	–	–	–	–	–
026B	4	–	4	–	–	–	–	–	–
030B	3	4	4	3	–	–	–	–	–
081	9	10	9	10	–	–	–	–	–
082	9	10	9	10	–	–	–	–	–
101B	4 (max. 40l)	7	7	6	–	–	–	–	–
102	3	4	3	4	3	3	5	5	3
	P->B	A->T	P->A	B->T	P->A	P->B	A->T	B->T	P->T
008	4	5	4	5	–	–	–	–	6
009	5	5	5	5	–	–	–	–	4

Flow curve diagram

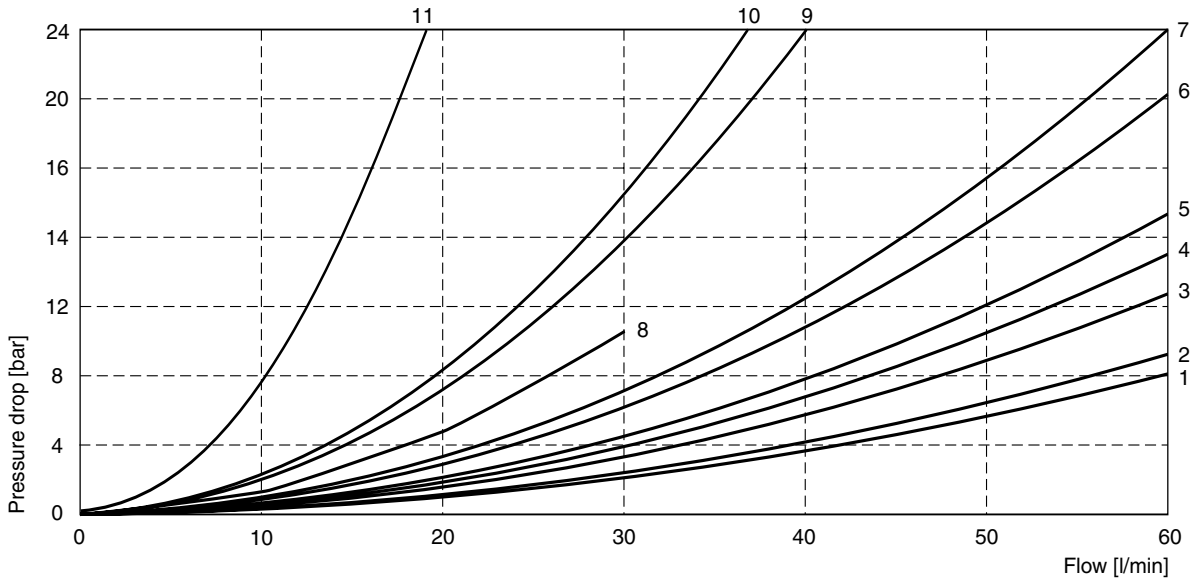

All characteristic curves measured with HLP46 at 50 °C.

The diagram below specifies the shift limits. The specifications apply to a viscosity of 40 mm²/s and balanced flow conditions. The shift limits can be considerably lower at unbalanced flow conditions. To avoid flow rates beyond the shift limits, a plug-in orifice can be inserted in the P-port.

Shift limits

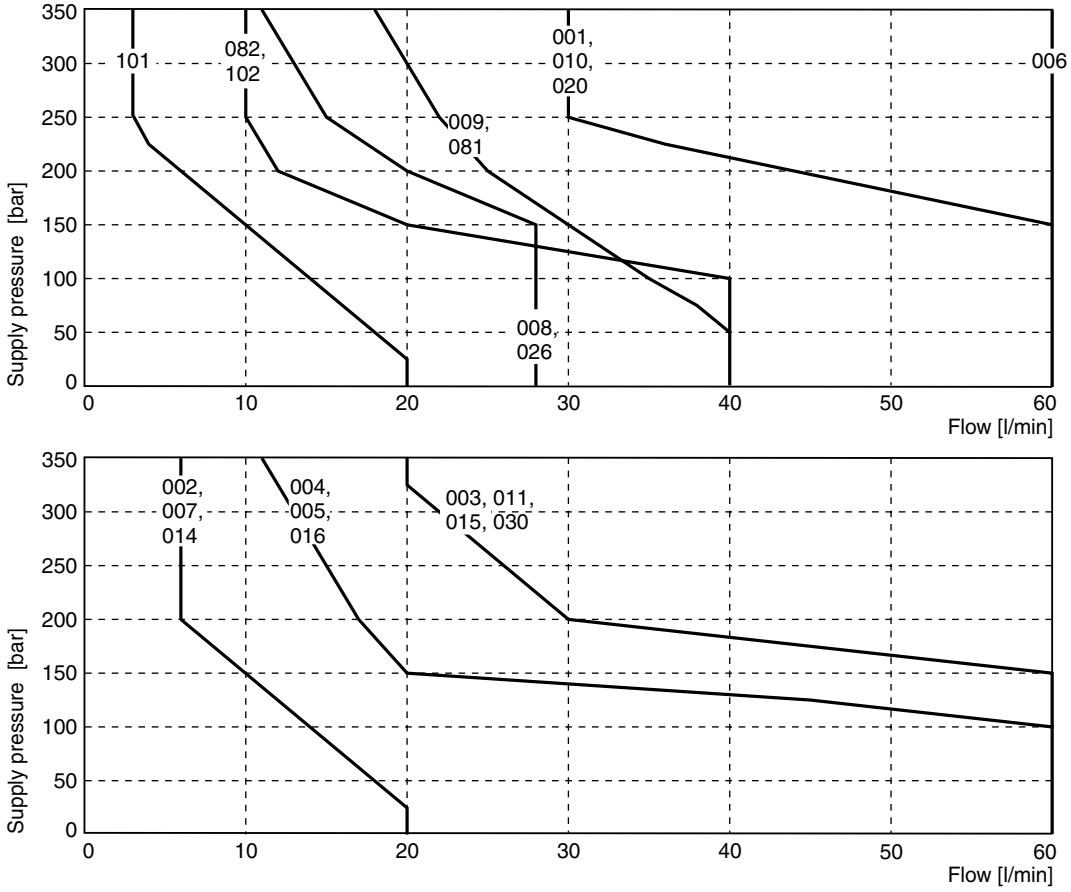

Measured with HLP46 at 50 °C, 90 % U_{nom} and warm solenoids.

M12 pin assignment DESINA design, code „JDLJ5“, pins 1 and 2 connected [1)]

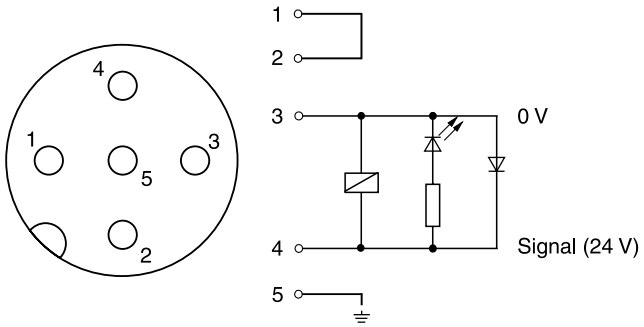

M12 pin assignment, code “JDL“, pins 1 and 2 not connected [1)]

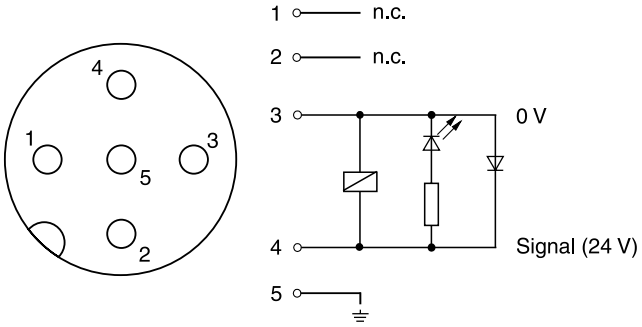

[1)] Surge diode with LED, max. voltage peak 50 V

2

Interface EN 175301-803, DC solenoid, JWL

Style B, E

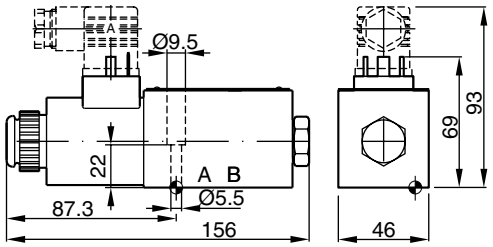

Style H, K

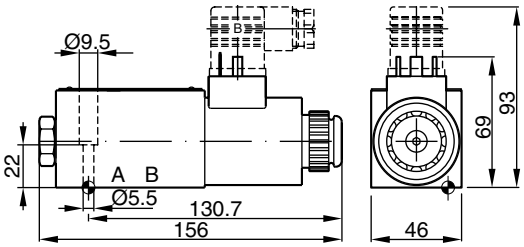

Style C, D

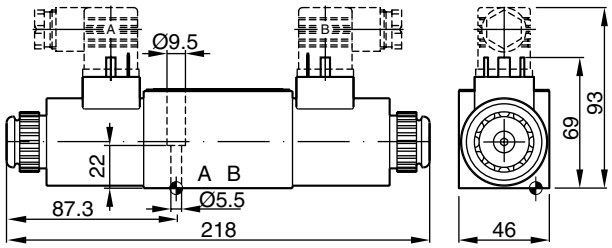

M12x1 connector, DC solenoid, JDLJ5 (DESINA) or JDL

Style B, E

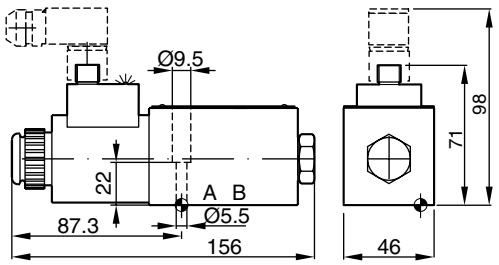

Style H, K

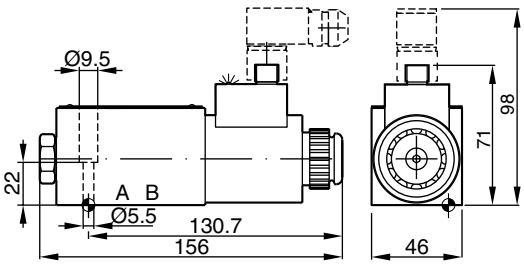

Style C, D

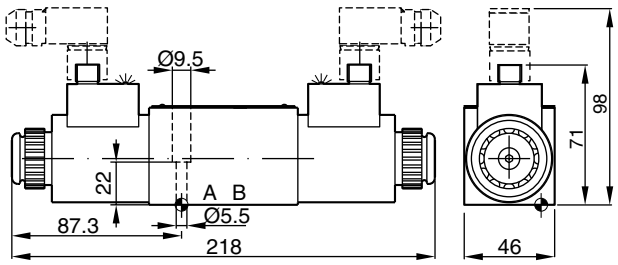

DESINA

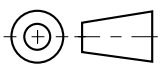

Surface finish	Kit			Kit
$\sqrt{R_{max}6.3}$ 0.01/100	BK375	4x M5x30 ISO 4762-12.9	7.6 Nm ±15 %	**NBR: SK-D1VW-N-91** FPM: SK-D1VW-V-91

The space necessary to remove the plug per EN 175301-803, design type AF is at least 15 mm.
The torque for the screw M3 of the plug has to be 0.5 to 0.6 Nm.

The direct operated directional valves series D1VW with inductive position control are typically used in safety relevant applications. The start or end position can be monitored. The position control is available for single and double solenoid valves.

The fail-safe position of the directional valve during power failure is the spring offset or center position.

Please find detailed information on the machine directive in the position paper in chapter 1.

Attention:

The adjustment of the position control is factory set and sealed. Replacement and repairs can only be undertaken by the manufacturer.

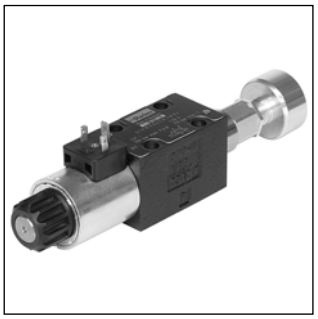

D1VW*B

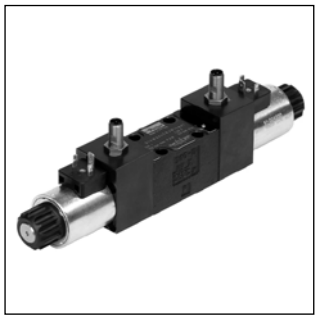

D1VW*C

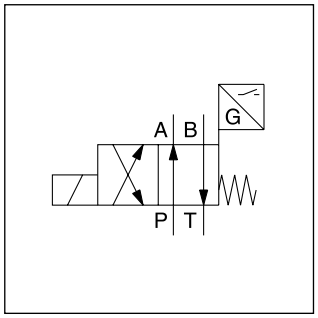

D1VW*B

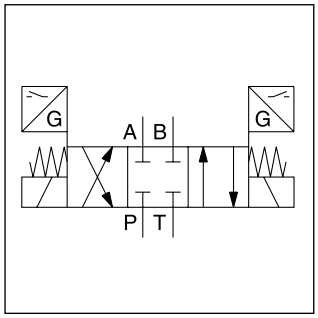

D1VW*C

D1VW*B

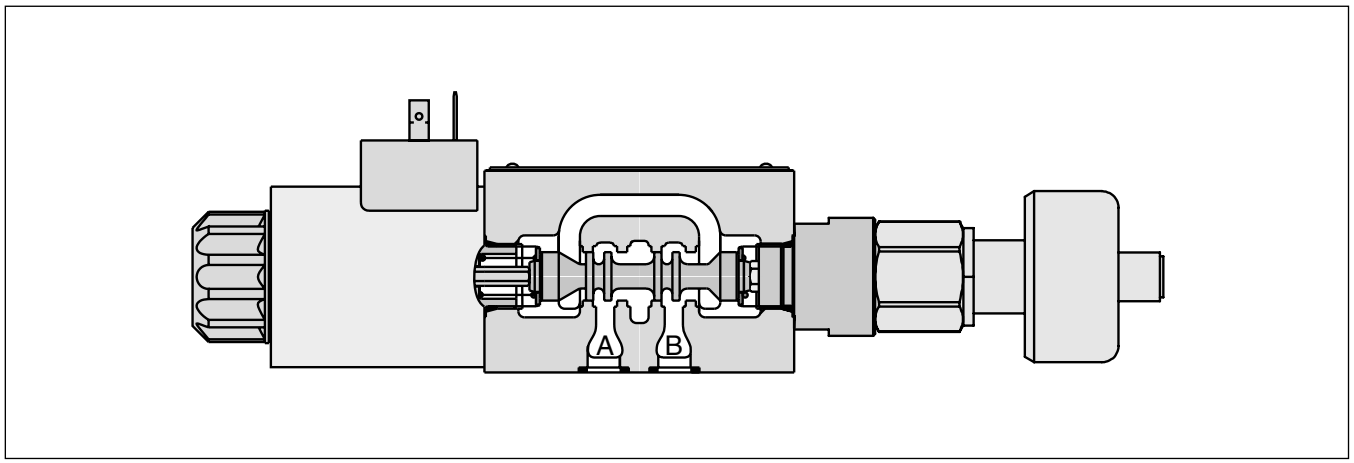

D1VW*C

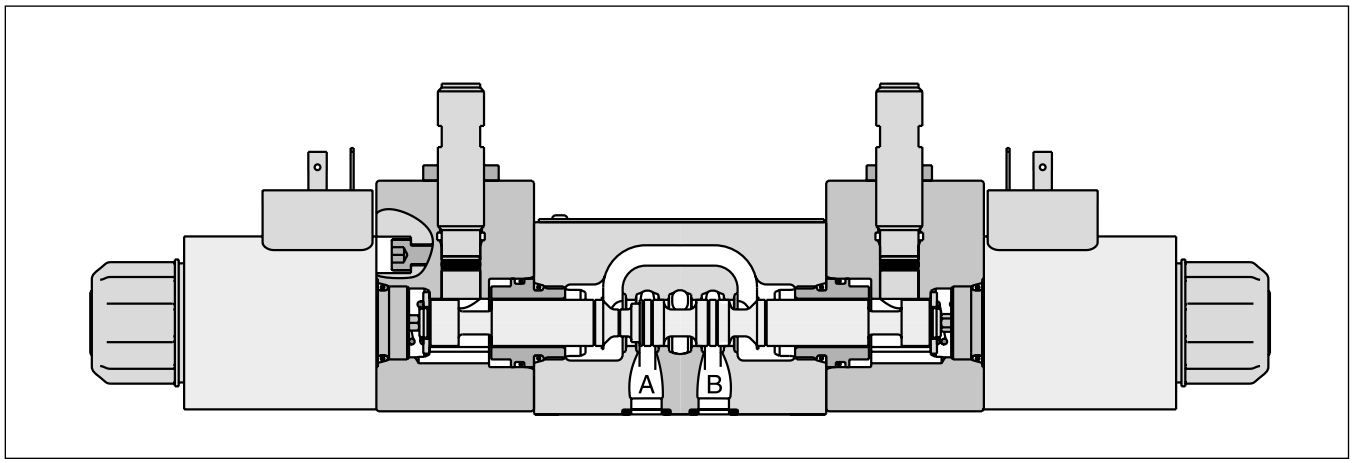

2

D	1	V	W		
Directional control valve	**Size DIN NG06 CETOP 03 NFPA D03**	**3-chamber valve**	**Wet pin solenoid**	**Spool type**	**Spool position**

3 position spools	
Code	Spool type a 0 b
001	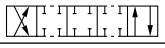
002	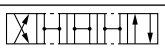
003[1]	
004	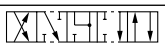
005	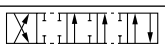
015[2]	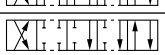
016	
076	
078	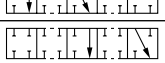

2 position spools	
Code	Spool type a b
020	
026[3]	
030[3]	

3 position spools		
Code	Spool position	
E	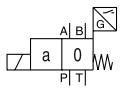 Operated in position “a“.	**2 positions. Spring offset in position “0“.**
F	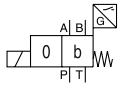 Spring offset in position “b“.	2 positions. Operated in position “0“.
K	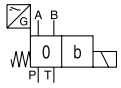 Operated in position “b“.	**2 positions. Spring offset in position “0“.**
M	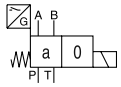 Spring offset in position “a“.	2 positions. Operated in position “0“.

2 position spools		
Code	Spool position	
B	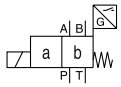	**2 positions. Spring offset in position “b“. Operated in position “a“.**
H	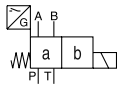	**2 positions. Spring offset in position “a“. Operated in position “b“.**

[1] Only available for spool position “E“ and “F“.

[2] Only available for spool position “K“ and “M“.

[3] Only available for spool position “B“ and “H“.

[4] To be used in combination with rectifier plugs at 120 VAC / 230 VAC power supply.

[5] Please order female connector M12x1 separately (see accessories, female connector M12x1 (order no.: 5004109).

[6] For hydraulic presses according to the safety regulations EN 693, solenoid option “T” (without manual override) and accessory “I4N” or “I5N” (start position monitored) are required.

		W			
Seals	**Solenoid voltage**	**Connector as per EN 175301-803, without plug** (please order plug separately)	**Manual override option**	**Position control** [5]	**Design series** (not required for ordering)

Code	Position control	Spool position
I2N	End position monitored side B	E, F, B (Solenoid on a-side)
I5N[6]	**Start position monitored side B**	
I1N	End position monitored side A	K, M, H (Solenoid on b-side)
I4N[6]	**Start position monitored side A**	

Code	Manual override
omit	**manual override (Standard)**
T[6]	without manual override

Code	Voltage
K	12 V=
J	**24 V=**
U[4]	98 V=
G[4]	205 V=

Code	Seals
N	**NBR**
V	FPM

Bold letters =
Short-term availability

Further spool types and voltages on request.

2

D	1	V	W					W			
Directional control valve	**Size DIN NG06 CETOP 03 NFPA D03**	**3-chamber valve**	**Wet pin solenoid**	**Spool type**	**Spool position**	**Seals**	**Solenoid voltage**	**Connector as per EN 175301-803, without plug** (please order plug separately)	**Manual override option**	**Position control [5]**	**Design series** (not required for ordering)

3 position spools	
Code	Spool type
	a 0 b
001	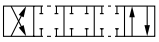
002	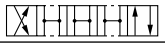
003 [1]	
004	
015 [1]	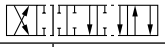

2 position spools	
Code	Spool type
	a b
020	

Code	Position control	Spool position
I3N	End positions	C, D
I6N [4]	Start positions	C

Code	Manual override
omit	manual override (Standard)
T [4]	without manual override

Code	Voltage
K	12 V=
J	24 V=
U [3]	98 V=
G [3]	205 V=

3 position spools		
Code	Spool position	
C	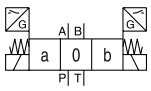	3 positions. Spring offset in position “0“. Operated in position “a“ or “b“.

2 position spools		
Code	Spool position	
D [2]	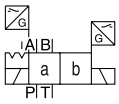	2 positions. Operated in position “a“ or “b“. No center or offset position.

Code	Seals
N	NBR
V	FPM

Further spool types and voltages on request.

[1] Only for position control code “I6N“.

[2] Only for position control code “I3N“.

[3] To be used in combination with rectifier plugs at 120 VAC / 230 VAC power supply.

[4] For hydraulic presses according to the safety regulations EN 693, solenoid option “T” (without manual override) and accessory “I6N” (start positions) is required.

[5] Please order plug M12 x 1 separately. Straight plug recommended – no defined position possible for angled plug.

General					
Design		Directional spool valve			
Actuation		Solenoid			
Size		DIN NG06 / CETOP 03 / NFPA D03			
Mounting interface		DIN 24340 A6 / ISO 4401 / CETOP RP 121-H / NFPA D03			
Mounting position		unrestricted, preferably horizontal			
Ambient temperature	[°C]	-20...+60			
$MTTF_D$ value	[years]	150			
Weight	[kg]	1.8 (1 solenoid) / 3.8 (2 solenoids)			
Hydraulic					
Max. operating pressure	[bar]	P, A B: 350 ; T: 210			
Fluid		Hydraulic oil according to DIN 51524			
Fluid temperature	[°C]	-20 ... +70			
Viscosity permitted	[cSt] / [mm²/s]	2.8...400			
Viscosity recommended	[cSt] / [mm²/s]	30...80			
Filtration		ISO 4406 (1999); 18/16/13			
Flow max.	[l/min]	80 (see shift limits)			
Leakage at 50 bar	[ml/min]	Up to 10 per flow path, depending on spool			
Static / Dynamic					
Step response at 95 %	[ms]	Energized: 32 ; De-energized: 40			
Electrical characteristics					
Duty ratio		100 % ED; CAUTION: coil temperature up to 150 °C possible			
Max. switching frequency	[1/h]	15000			
Protection class		IP65 in accordance with EN 60529 (with correctly mounted plug-in connector)			
	Code	K	J	U	G
Supply voltage	[V]	12 V =	24 V =	98 V =	205 V =
Tolerance supply voltage	[%]	±10	±10	±10	±10
Current consumption	[A]	2.72	1.29	0.33	0.13
Power consumption	[W]	32.7	31	31.9	28.2
Solenoid connection		Connector as per EN 175301-803, solenoid identification as per ISO 9461.			
Wiring min.	[mm²]	3 x 1.5 recommended			
Wiring length max.	[m]	50 recommended			

With electrical connections the protective conductor (PE ⏚) must be connected according to the relevant regulations.

2

Single solenoid valves

Electrical characteristics of position control as per IEC 61076-2-101 (M12x1)

Supply voltage	[VDC]	24
Tolernace supply voltage	[%]	±20
Ripple supply voltage	[%]	≤10
Polarity protection	[V]	300
Current consumption without load	[mA]	≤20
Switching hysteresis	[mm]	<0.06
Max. output current per channel, ohmic	[mA]	250
Ambient temperature	[°C]	-20 … +60
Protection		IP65 acc. EN 60529 (with correctly mounted plug-in connector)
Min. distance to next AC solenoid	[m]	0.1
Interface		M12x1 to IEC 61076-2-101
CE conform		EN 61000-4-2 / EN 61000-4-4 / EN 61000-4-6 [1] / ENV 50140 / ENV 50204

M12 pin assignment

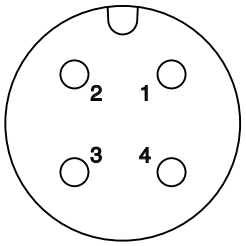

1 + U_S 19.2...28.8 V
2 Out B: normally open
3 0V
4 Out A: normally closed

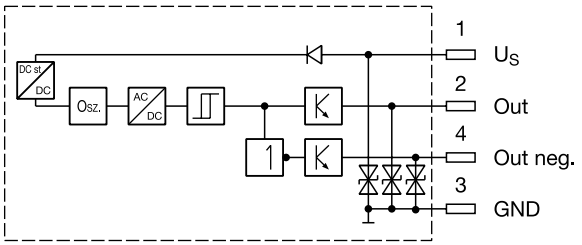

Outputs: Open collector

Definitions

Start position monitored:

The valve is de-energized. The inductive switch gives a signal at the moment when the spool leaves the spring offset position (below 15 % spool stroke).
At the switching point the spool is located within the closed position. It is secured that only the flow paths of the offset position are granted.

End position monitored:

The inductive switch gives a signal before the end position is reached (above 85 % spool stroke).

The switch can only be located on the opposite side of the solenoid for direct operated valves.
Please order plug M12x1 separately (see accessories, plug M12x1; order no.: 5004109).

[1] Only guaranted with screened cable and female connector

Double solenoid valves

Electrical characteristics of position control as per IEC 61076-2-101 (M12x1)

Protection class		IP65 in accordance with EN 60529 (with correctly mounted plug-in connector)
Ambient temperature	[°C]	-20...+60
Supply voltage Us / ripple	[V]	10...30 / ±10 %
Current consumption without load	[mA]	≤ 10
Max. output current per channel, ohmic	[mA]	200
Min. output load per channel, ohmic	[kOhm]	100
Max. output drop at 0.2 A	[V]	≤ 2
EMC		EN61000-6-4 / EN61000-6-2
Min. distance to next AC solenoid	[m]	>0.1
Interface		M12x1 acc. to IEC 61076-2-101
Wiring min.	[mm²]	3 x 0.14 brad shield recommended
Wiring length max.	[m]	50 recommended

M12 pin assignment

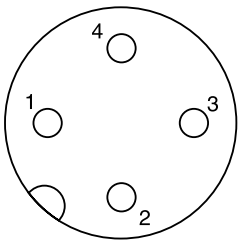

1 Us 10...30 V
2 not connected
3 0 V
4 Out A: normally open

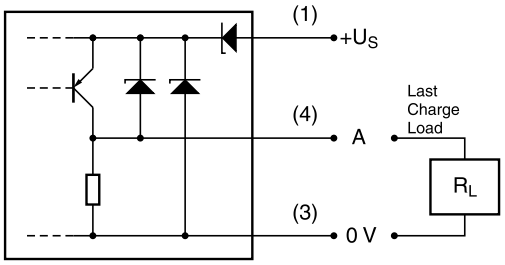

Definitions

Start position monitored:

The valve is de-energized. The inductive switch gives a signal at the moment when the spool leaves the center position (below 15 % spool stroke).
At the switching point the spool is located within the closed position. It is secured that only the flow paths of the offset position are granted.

End position monitored:

The inductive switch gives a signal before the end position is reached (above 85 % spool stroke).

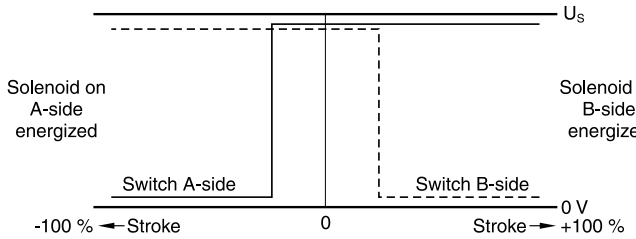

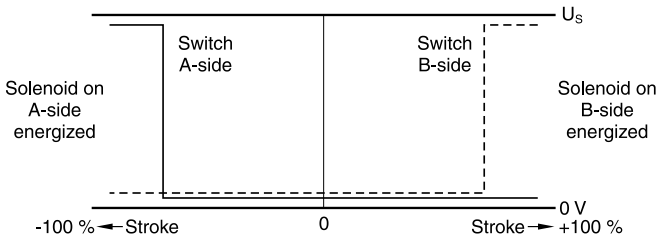

Please order plug M12 x 1 separately. Straight plug recommended – no defined position possible for angled plug.

2

The flow curve diagram shows the flow versus pressure drop curves for all spool types. The relevant curve number for each spool type, operating position and flow direction is given in the table below.

	Position „b“		Position „a“		Position „0“				
Spool	P->A	B->T	P->B	A->T	P->A	P->B	A->T	B->T	P->T
001	2	2	2	2	–	–	–	–	–
002	1	4	1	4	1	1	5	5	2
003	3	4	3	6	–	–	7	–	–
004	2	3	2	3	–	–	7	7	–
005	2	2	2	2	12	–	–	–	–
015	3	6	3	4	–	–	–	7	–
016	2	2	2	2	–	12	–	–	–
020 B	4	4	2	3	–	–	–	–	–
026 B	4	–	4	–	–	–	–	–	–
030 B	2	3	1	2	–	–	–	–	–

Flow curve diagram

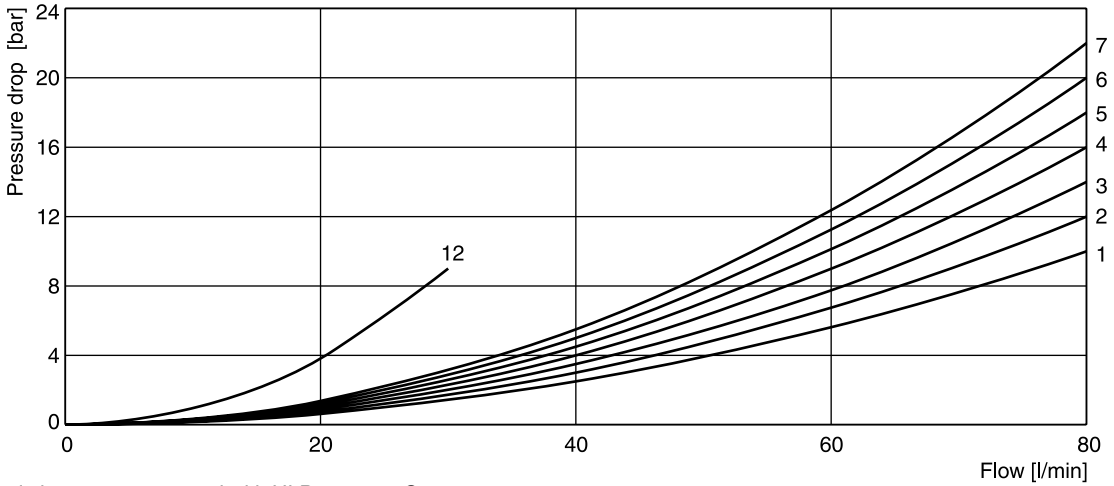

All characteristic curves measured with HLP46 at 50 °C.

Shift limit diagram

The diagram below specifies the shift limits. Valves with spool position “F” or “M” can only be operated up to 70 % of the limits. The specifications apply to a viscosity of 40 mm^2/s and balanced flow conditions. The shift limits can be considerably lower at unbalanced flow conditions. To avoid flow rates beyond the shift limits, a plug-in orifice can be inserted in the P-port.

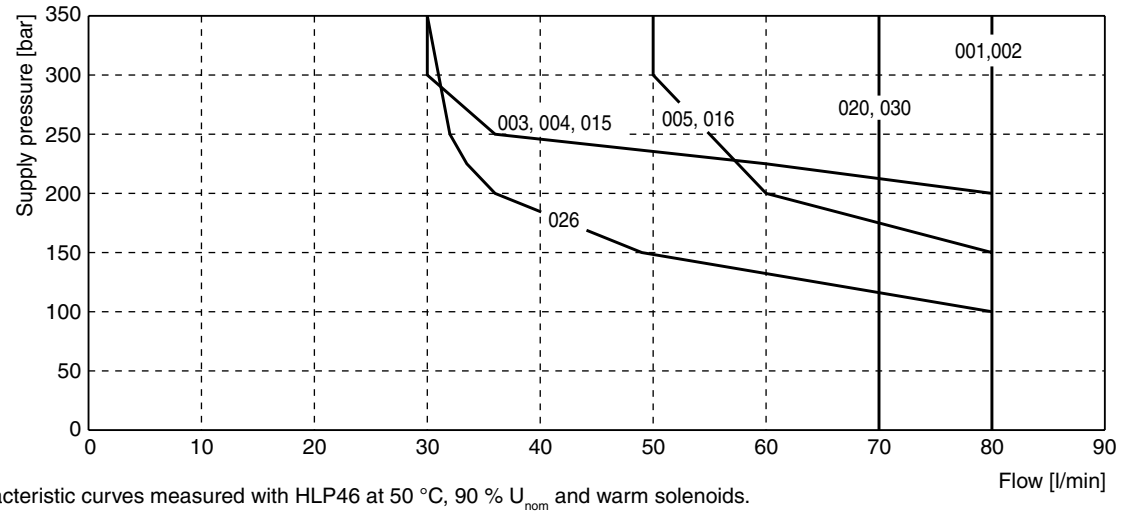

All characteristic curves measured with HLP46 at 50 °C, 90 % U_{nom} and warm solenoids.

Interface EN 175301-803, DC solenoid, without plug M12x1[1)]
B, E, F -style

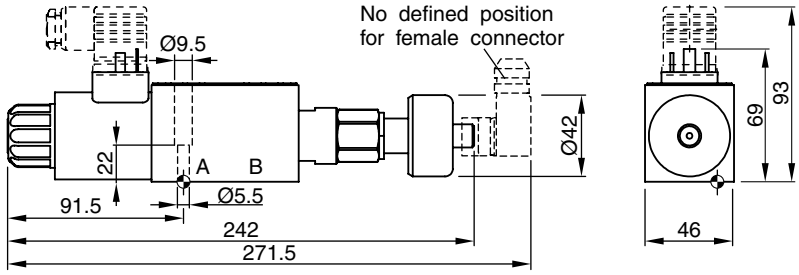

H, K, M -style

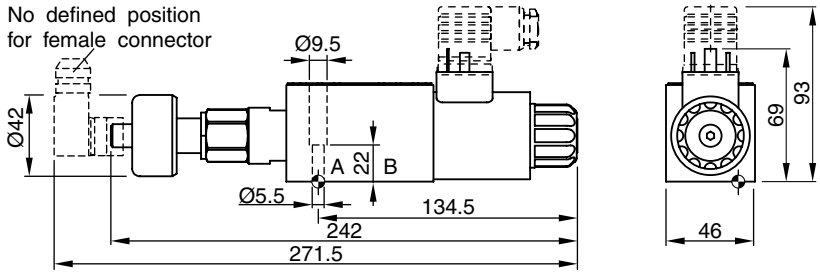

Interface EN 175301-803, DC solenoid, without plug M12x1[2)]
C, D -style

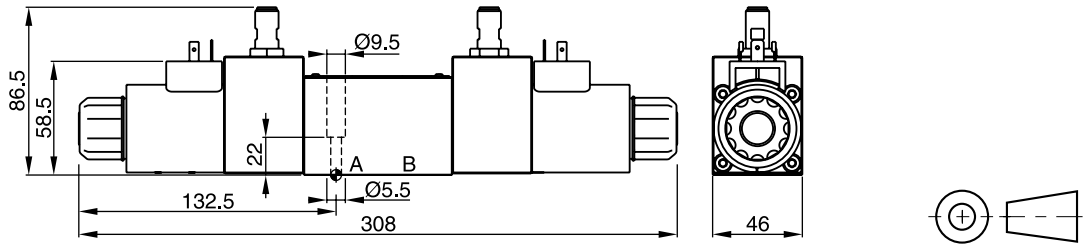

Surface finish	Kit			Kit
$R_{max}6.3$ 0.01/100	BK375	4x M5x30 ISO 4762-12.9	7.6 Nm ±15 %	**NBR: SK-D1VW-N-91** FPM: SK-D1VW-V-91

The space necessary to remove the plug per EN 175301-803, design type AF is at least 15 mm.
The torque for the screw M3 of the plug has to be 0.5 to 0.6 Nm.
The space necessary to remove the M12x1 female connector is at least 22 mm.

Attention:

The adjustment of the position control is factory set and sealed. Replacement and repairs can only be undertaken by the manufacturer.

[1)] Please order plug M12x1 separately (see accessories, plug M12x1; order no.: 5004109).

[2)] Please order plug M12x1 separately. Straight plug recommended – no defined position possible for angled plug.

2

The D1VW with explosion proof solenoids is based on the standard D1VW series. The specific solenoid design allows the usage in hazardous environments.

The explosion proof class is

CE Ex II 2 G
Ex e mb IIC T4 Gb

for use in zone 1 and 2 (according to ATEX). Additionally the solenoids are IECEx compliant.

All explosion proof solenoids are DC design. The valves for AC operate with integrated rectifier.

For further explosion proof valves please refer to catalogue MSG11-3343/UK.

Download of the PDF file at www.parker.com/ISDE, see “Support”.

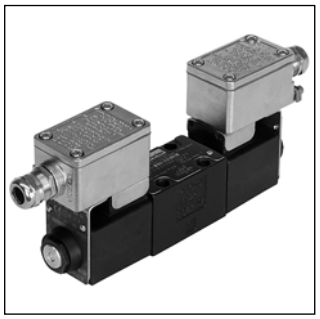

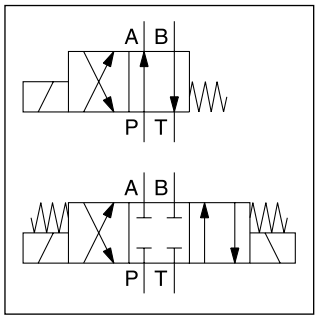

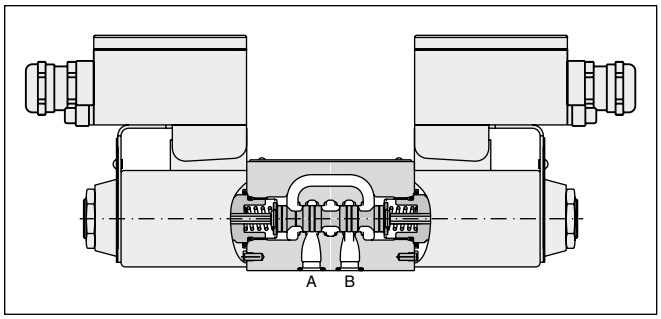

Technical data

General				
Design		Directional spool valve		
Actuation		Solenoid		
Size		DIN NG06 / CETOP 03 / NFPA D03		
Mounting interface		DIN 24340 A6 / ISO 4401 / CETOP RP 121-H / NFPA D03		
Mounting position		unrestricted, preferably horizontal		
Ambient temperature	[°C]	-20 ... +60		
$MTTF_D$	[years]	150		
Weight	[kg]	1.8 (1 solenoid), 2.7 (2 solenoids)		
Hydraulic				
Max. operating pressure	[bar]	P, A B: 350; T: 210		
Fluid		Hydraulic oil according to DIN 51524		
Fluid temperature	[°C]	-20 ... +60		
Viscosity permitted	[cSt] / [mm²/s]	2.8 ... 400		
Viscosity recommended	[cSt] / [mm²/s]	30 ... 80		
Filtration		ISO 4406 (1999); 18/16/13		
Flow max.	[l/min]	60 (see shift limits)		
Leakage at 50 bar	[ml/min]	Up to 10 per flow path, depending on spool		
Static / Dynamic				
Step response at 95 %	[ms]	Energized: 32 (DC), 40 (AC) De-energized: 40 (DC), 75 (AC)		
Electrical characteristics				
Duty ratio		100 % ED; CAUTION: coil temperature up to 135 °C possible		
Max. switching frequency	[1/h]	15000 (DC), 7200 (AC)		
Protection class		CE Ex II 2 G , Ex e mb IIC T4 Gb, IP66 (plugged and mounted correctly)		
	Code	J	N	P
Supply voltage / ripple	[V]	24 V =	230/50 Hz	110/50 Hz
Tolerance supply voltage	[%]	±10	±10	±10
Current consumption	[A]	1.0	0.12	0.25
Power consumption	[W]	24	24	24
Solenoid connection		Box with M20x1.5 entry for cable glands. Solenoid identification as per ISO 9461.		
Wiring min.	[mm²]	3 x 1.5 recommended		
Wiring length max.	[m]	50 recommended		

With electrical connections the protective conductor (PE ⏚) must be connected according to the relevant regulations.

D	1	V	W					E	E	
Directional control valve	**Size DIN NG06 CETOP 03 NFPA D03**	**3-chamber valve**	**Wet pin solenoid**	**Spool type**	**Spool position**	**Seals**	**Solenoid voltage**	**Connection: Explosion proof with cable glands**	**Solenoid options: Explosion proof Ex e mb IIC and IECEx conformity**	**Design series** (not required for ordering)

3 position spools	
Code	Spool type a 0 b
001	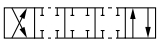
002	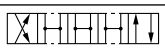
003	
004	
005	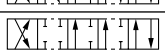
006	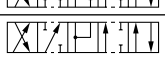
007	
008 [1]	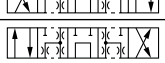
009 [1]	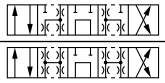
010	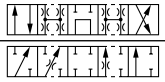
011	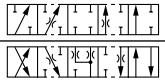
014	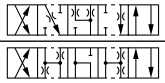
015	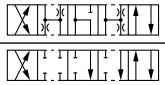
016	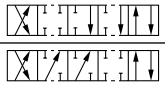
021	
022	
081	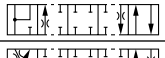
082	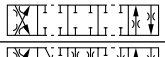
102	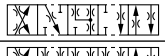

2 position spools	
Code	Spool type a b
020	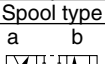
026	
030	
101	

Code	Voltage
J	24 V=
P	110 V 50 Hz
N	230 V 50 Hz

Code	Seals
N	NBR
V	FPM

3 position spools			
Code	Spool position		
C	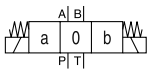		3 positions. Spring offset in position “0“. Operated in position “a“ or “b“.
	Standard	Spool type 008, 009	
E	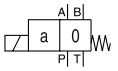 Operated in position “a“.	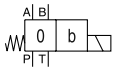 Operated in position “b“.	2 positions. Spring offset in position “0“.
K	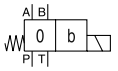 Operated in position “b“.	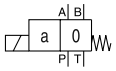 Operated in position “a“.	2 positions. Spring offset in position “0“.

2 position spools		
Code	Spool position	
B	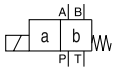	2 positions. Spring offset in position “b“. Operated in position “a“.
D	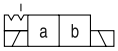	2 positions. Operated in position “a“ or “b“. No center or offset position.
H	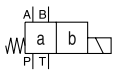	2 positions. Spring offset in position “a“. Operated in position “b“.

Further spool types, styles, and combinations on request.

[1] Consider specific spool position.

2

The flow curve diagram shows the flow versus pressure drop curves for all spool types. The relevant curve number for each spool type, operating position and flow direction is given in the table below.

	Position "b"			Position "a"			Position "0"				
Spool	P-A	B-T	P-B	P-B	A-T	P-A	P-A	P-B	A-T	B-T	P-T
001	2	2		2	2						
002	1	4		1	4		1	1	5	5	2
003	3	4		3	6				7		
004	2	3		2	3				7	7	
005	2	2		2	2		12				
006	1	4		1	4		7	7			
007	3	2		2	2			3		2	7
010	3			3							
011	2	2		2	2				14	14	
014	3	2		2	2		3		2		7
015	3	6		3	4					7	
016	2	2		2	2			12			
020B	4	4		2	3						
026B	4			4							
030B	2	3		1	2						
081	13	13		13	13						
082	13	13		13	13				1)	1)	
101B	11	10		10	9						
102	1	4		1	4		5	5	8	8	6
	P-B	A-T		P-A	B-T		P-A	P-B	A-T	B-T	P-T
008	4	5		4	5						9
009	5	5		6	7						7

	Position "b"			Position "a"		
Spool	P-A	P-B	A-B	P-B	A-T	
021	2	4		4	2	
	P-A	B-T		P-A	P-B	A-B
022	6	2		5	2	

Flow curve diagram

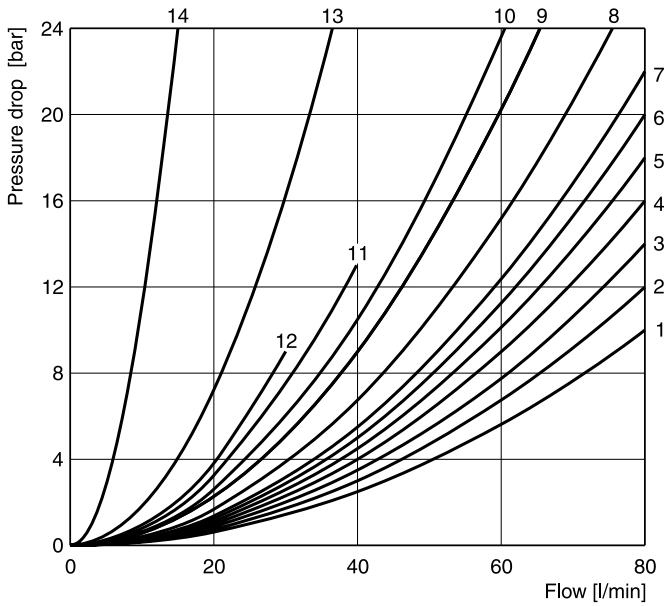

All characteristic curves measured with HLP46 at 50 °C.

1) Only for pressure compensation, no high flow possible.

The diagram below specifies the shift limits for valves with AC and DC solenoids. The specifications apply to a viscosity of 40 mm^2/s and balanced flow conditions. The shift limits can be considerably lower at unbalanced flow conditions. To avoid flow rates beyond the shift limits, a plug-in orifice can be inserted in the P-port.

Shift limit diagram with DC solenoid

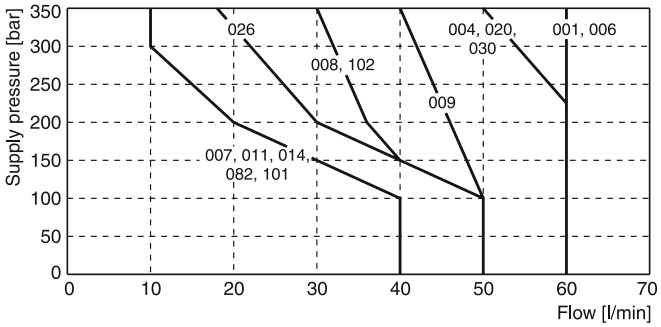

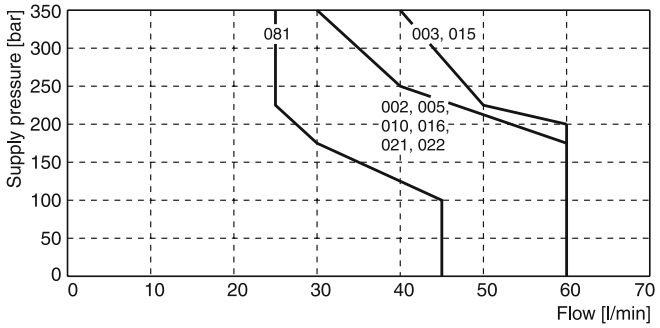

Measured with HLP46 at 50 °C, 90 % U_{nom} and warm solenoids

Shift limit diagram with AC solenoid

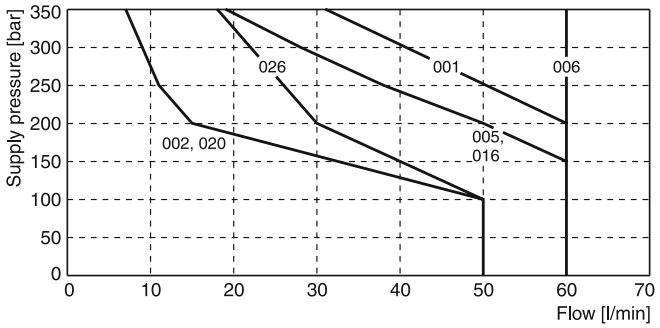

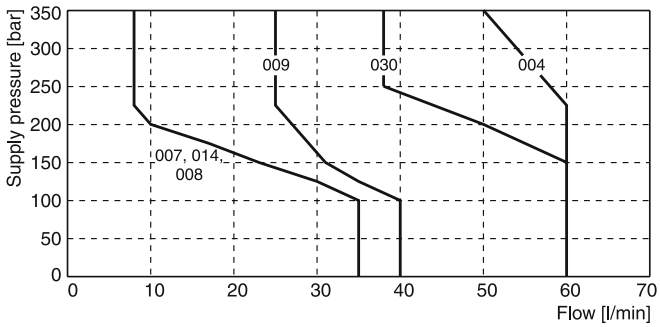

Measured with HLP46 at 50 °C, 95 % U_{nom} and warm solenoids

2

Dimensions

B, E -style

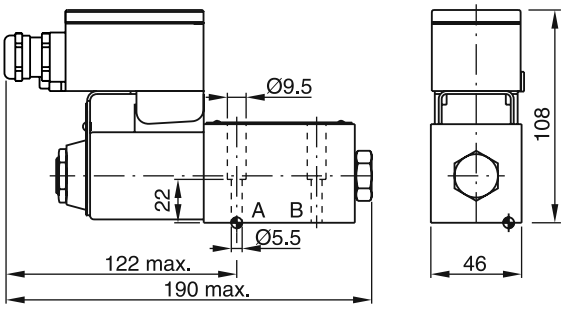

H, K -style

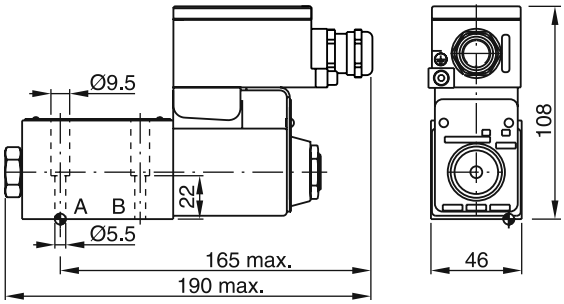

C, D -style

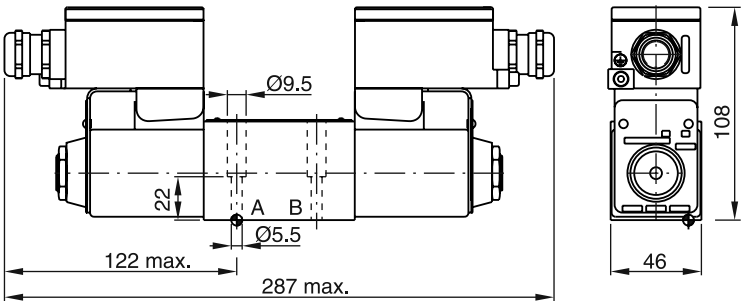

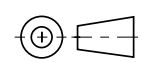

Surface finish	Kit			Kit NBR
R_{max}6.3 0.01/100	BK375	4x M5x30 ISO 4762-12.9	7.6 Nm ±15 %	**NBR: SK-D1VW-N-91** FPM: SK-D1VW-V-91

The D1MW is based on the D1VW series of directional control valves size NG06, but offers additional corrosion protection of the valve body, the solenoid coil and the anchor tube as well as the typical solenoid connections for the mobile market such as AMP Junior Timer and DT04-2P “Deutsch”.



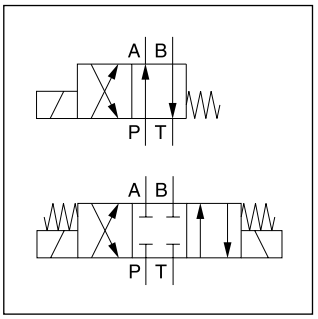

With AMP Junior Timer

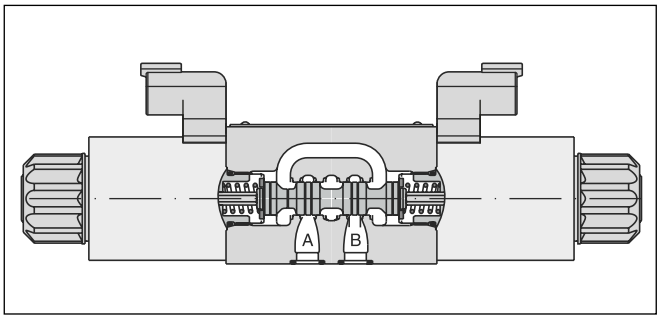

Connector DT04-2P “Deutsch”

Technical features

- High corrosion protection (optional)
- Solenoid connection:
  - Standard (as per EN175301-803)
  - AMP Junior Timer
  - DT04-2P “Deutsch”
- Robust design for rough applications
- Extended manual override with rubber cover (optional)

Technical data

General			
Design		Directional spool valve	
Actuation		Solenoid	
Size		DIN NG06 / CETOP 03 / NFPA D03	
Mounting interface		DIN 24340 A6 / ISO 4401 / CETOP RP 121-H / NFPA D03	
Mounting position		Unrestricted, preferably horizontal	
Ambient temperature	[°C]	-25...+60	
$MTTF_D$ value	[years]	150	
Weight	[kg]	1.5 (1 solenoid), 2.1 (2 solenoids)	
Vibration resistance	[g]	10 Sinus 5...2000 Hz acc. IEC 68-2-6 30 Random noise 20...2000 Hz acc. IEC 68-2-36 15 Shock acc. IEC 68-2-27	
Hydraulic			
Max. operating pressure	[bar]	P, A B: 350; T: 210	
Fluid		Hydraulic oil according to DIN 51524	
Fluid temperature	[°C]	-20 ... +70 (NBR: -25...+70)	
Viscosity permitted	[cSt] / [mm²/s]	2.8...400	
Viscosity recommended	[cSt] / [mm²/s]	30...80	
Filtration		ISO 4406 (1999); 18/16/13	
Flow max.	[l/min]	80 (see shift limits)	
Leakage at 50 bar	[ml/min]	Up to 10 per flow path, depending on spool	
Static / Dynamic			
Step response at 95 %	[ms]	Energized: 32 De-energized: 40	
Electrical characteristics			
Duty ratio		100 % ED; CAUTION: coil temperature up to 150 °C possible	
Max. switching frequency	[1/h]	15000	
Protection class		Standard (as per EN175301-803) IP65 acc. EN60529 (w. corr. mount. plug-in connector) AMP Junior Timer IP67 in acc. with EN60529 (with correctly mounted plug-in connector) DT04-2P “Deutsch” IP69K (with correctly mounted plug-in connector)	
	Code	K	J
Supply voltage	[V]	12 V =	24 V =
Tolerance supply voltage	[%]	±10	±10
Current consumption hold	[A]	2.72	1.29
Power consumption hold	[W]	32.7	31
Solenoid connection		Connector as per EN 175301-803 (code W), AMP Junior Timer (code A), DT04-2P “Deutsch“ connector (code J). Solenoid identification as per ISO 9461.	
Wiring min.	[mm²]	3 x 1.5 recommended	
Wiring length max.	[m]	50 recommended	

With electrical connections the protective conductor (PE ⏚) must be connected according to the relevant regulations.

2

D	1	M	W		
Directional control valve	**Size DIN NG06 CETOP 03 NFPA D03**	**3-chamber valve for mobile and marine applications**	**Wet pin armature solenoid, threaded in tube**	**Spool type**	**Spool position**

3 position spools	
Code	Spool type a 0 b
001	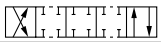
002	
003	
004	
005	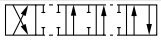
006	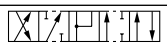
007	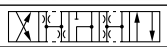
008 [1]	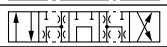
009 [1]	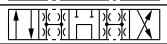
010	
011	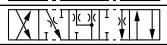
014	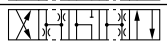
015	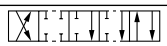
016	
021	
022	
031	
032	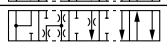
034	
035	
061	
081	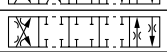
082	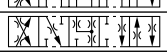
102	
204 [1]	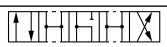
205 [1]	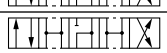

2 position spools	
Code	Spool type a b
020	
026	
030	
083 [1]	
101	
208	

3 position spools			
Code	Spool position		
C	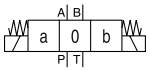		3 positions. Spring offset in position “0“. Operated in position “a“ or “b“.
	Standard	Spool type 008, 009, 204, 205	
E	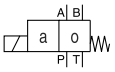 Operated in position “a“.	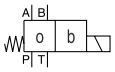 Operated in position “b“.	2 positions. Spring offset in position “0“.
F	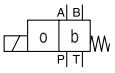 Spring offset in position “b“.	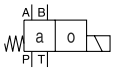 Spring offset in position “a“.	2 positions. Operated in position “0“.
K	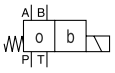 Operated in position “b“.	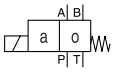 Operated in position “a“.	2 positions. Spring offset in position “0“.
M	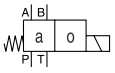 Spring offset in position “a“.	 Spring offset in position “b“.	2 positions. Operated in position “0“.

2 position spools			
Code	Spool position		
	Standard	Spool type 083	
B			2 positions. Spring offset in position “b“. Operated in position “a“.
D		—	2 positions. Operated in position “a“ or “b“. No center or offset position.
H			2 positions. Spring offset in position “a“. Operated in position “b“.

[1] Consider specific spool position.

[2] Please order plug separately.

[3] Only in combination with connection “J” and “W”.

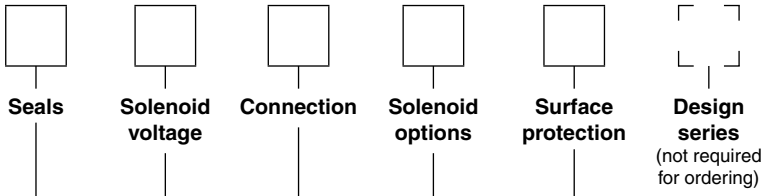

Code	Surface protection
omit	Standard, only for connection “J“ and “A“
1P [3]	Anti corrosion coating acc. to DIN EN ISO 9227 NSS, 200 h for extreme conditions.

Code	Solenoid option
omit	manual override (Standard)
T	without manual override
W	extended manual override with rubber cover

Code	Connection
W [2]	Connector as per EN 175301-803
J [2]	Connector DT04-2P “Deutsch“
A [2]	2-pin AMP Junior Timer

Code	Solenoid voltage
K	12 V =
J	24 V =

Code	Seals
N	NBR
V	FPM

Other spool types on request.

2

Flow curves

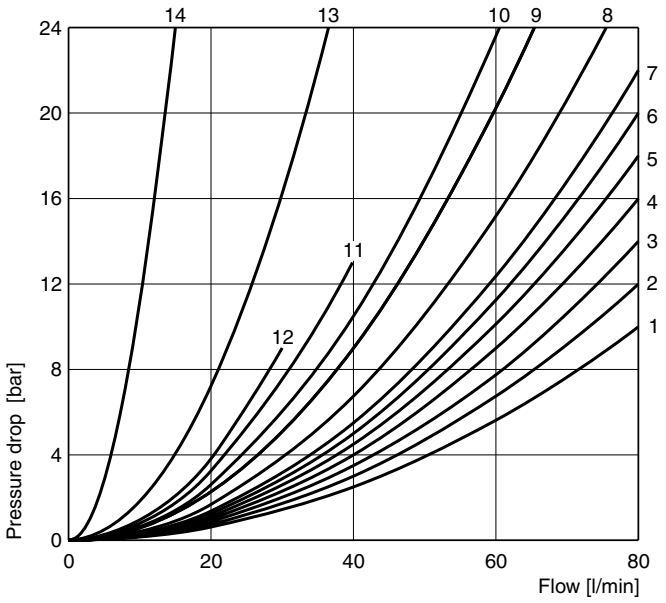

All characteristic curves measured with HLP46 at 50 °C.

	Position "b"			Position "a"			Position "0"				
Spool	P-A	B-T	P-B	P-B	A-T	P-A	P-A	P-B	A-T	B-T	P-T
001	2	2		2	2						
002	1	4		1	4		1	1	5	5	2
003	3	4		3	6				7		
004	2	3		2	3				7	7	
005	2	2		2	2		12				
006	1	4		1	4		7	7			
007	3	2		2	2			3		2	7
010	3			3							
011	2	2		2	2				14	14	
014	3	2		2	2		3		2		7
015	3	6		3	4					7	
016	2	2		2	2			12			
020B	4	4		2	3						
026B	4			4							
030B	2	3		1	2						
034	4		8	3	3				5	7	
035	3	3		4		8			7	5	
081	13	13		13	13						
082	13	13		13	13				[1]	[1]	
101B	11	10		10	9						
102	1	4		1	4		5	5	8	8	6
61	1	3		1	3		3	2			
83H	5	2		5	2						
208	3			2							
	P-B	A-T		P-A	B-T		P-A	P-B	A-T	B-T	P-T
008	4	5		4	5						9
009	5	5		6	7						7
83B	5	2		5	2						
204	1	3		4	3		7		4		7
205	4	3		1	3			7		4	5

	Position "b"			Position "a"		
Spool	P-A	P-B	A-B	P-B	A-T	
021	2	4		4	2	
	P-A	B-T		P-A	P-B	A-B
022	6	2		5	2	

[1] Only for pressure compensation, no high flow possible.

Shift limits, DC voltage

The diagram below specifies the shift limits for valves with DC & AC solenoids. Valves with spool position “F” or “M” can only be operated up to 70 % of the limits. The specifications apply to a viscosity of 40 mm²/s and balanced flow conditions. The shift limits can be considerably lower at unbalanced flow conditions. To avoid flow rates beyond the shift limits, a plug-in orifice can be inserted in the P-port.

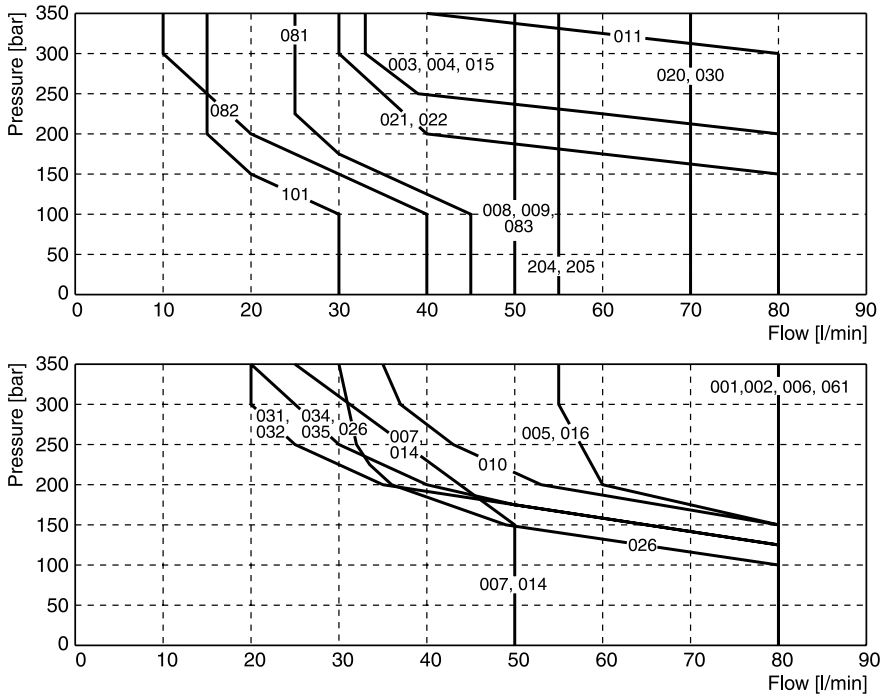

Measured with HLP46 at 50 °C, 90 % U_{nom} and warm solenoids

2

Dimensions with EN 175301-803 Connector

B, E, F -style

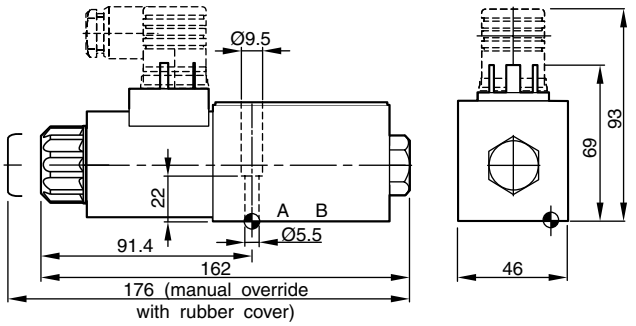

H, K, M -style

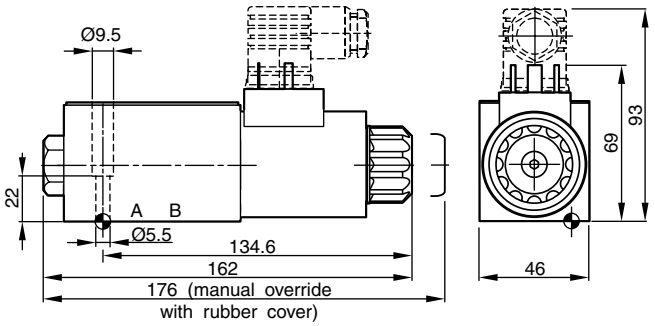

C and D -style

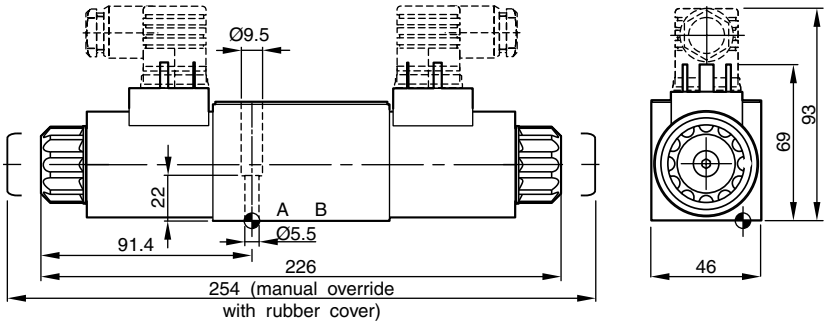

Dimensions with 2pin AMP Junior Timer Connector (only C and D -style shown)

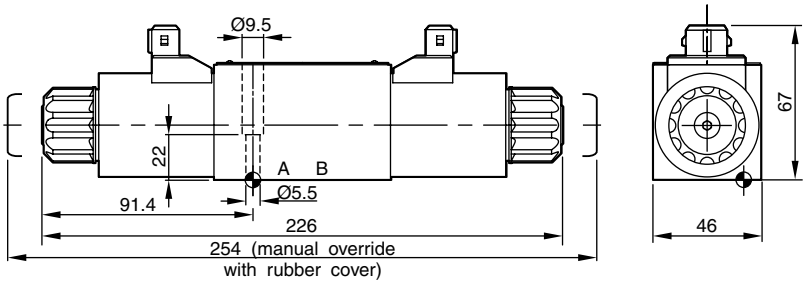

Dimensions with "Deutsch" DT04-2P Connector (only C and D -style shown)

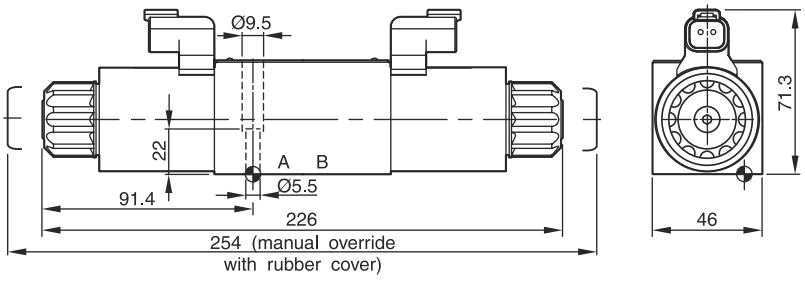

Surface finish	Kit			Kit
$\sqrt{R_{max}6.3}$ 0.01/100	BK375	4x M5x30 ISO 4762-12.9	7.6 Nm ±15 %	**NBR: SK-D1VW-N-91** FPM: SK-D1VW-V-91

The space necessary to remove the plug per EN 175301-803, design type AF is at least 15 mm.
The torque for the screw M3 of the plug has to be 0.5 to 0.6 Nm.

The NG10 direct operated directional control valve series D3W provides high functional limits up to 150 l/min in combination with a low, energy saving pressure drop.

The wide variety of options includes soft shift anchor tubes for smooth operation.

Versions with position control, additional surface protection and connector variants are shown in the following chapters.



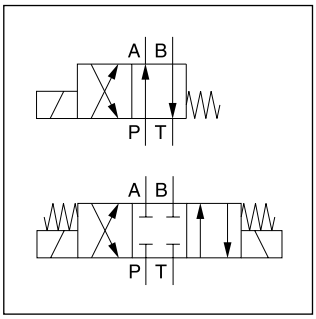

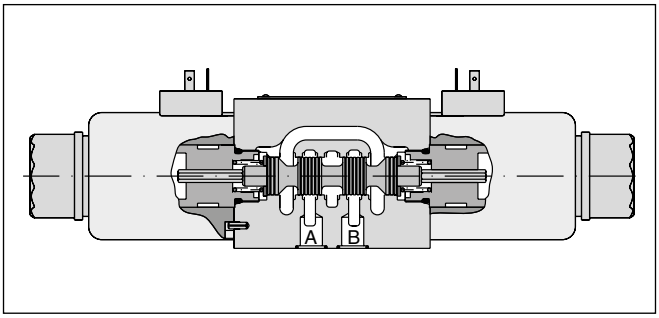

Technical data

General							
Design		Directional spool valve					
Actuation		Solenoid					
Size		DIN NG10 / CETOP 05 / NFPA D05					
Mounting interface		DIN 24340 A10 / ISO 4401 / CETOP RP 121-H / NFPA D05					
Mounting position		unrestricted, preferably horizontal					
Ambient temperature	[°C]	-25...+60					
$MTTF_D$ value	[years]	150					
Weight	[kg]	4.8 (1 solenoid), 6.3 (2 solenoids)					
Vibration resistance	[g]	10 Sinus 5...2000 Hz acc. IEC 68-2-6 30 Random noise 20...2000 Hz acc. IEC 68-2-36 15 Shock acc. IEC 68-2-27					
Hydraulic							
Max. operating pressure	[bar]	P, A B: 350; T: 210 (DC), 105 (AC)					
Fluid		Hydraulic oil according to DIN 51524					
Fluid temperature	[°C]	-20 ... +70 (NBR: -25...+70)					
Viscosity permitted	[cSt] / [mm²/s]	2.8...400					
Viscosity recommended	[cSt] / [mm²/s]	30...80					
Filtration		ISO 4406 (1999); 18/16/13					
Flow max.	[l/min]	150 (DC); 115 (AC) (see shift limits)					
Leakage at 50 bar	[ml/min]	Up to 20 per flow path, depending on spool					
Static / Dynamic							
Step response		see table response times					
Electrical characteristics							
Duty ratio		100 % ED; CAUTION: coil temperature up to 150 °C possible					
Max. switching frequency	[1/h]	10000					
Protection class		IP65 in accordance with EN 60529 (with correctly mounted plug-in connector)					
	Code	K	J	U	G	Y	T
Supply voltage / ripple	[V]	12 V =	24 V =	98 V =	205 V =	110 V at 50 Hz/ 120 V at 60 Hz	230 V at 50 Hz/ 240 V at 60 Hz
Tolerance supply voltage	[%]	±10	±10	±10	±10	±5	±5
Current consumption hold	[A]	3	1.5	0.35	0.18	0.8 / 0.72	0.4 / 0.36
Current consumption in rush	[A]	3	1.5	0.35	0.18	3.41 / 3.31	1.75 / 1.7
Power consumption hold	[W]	36	36	34	36	88 / 86	88 / 86
Power consumption in rush	[W]	36	36	34	36	375 / 397	385 / 408
Solenoid connection		Connector as per EN 175301-803, solenoid identification as per ISO 9461.					
Wiring min.	[mm²]	3 x 1.5 recommended					
Wiring length max.	[m]	50 recommended					

With electrical connections the protective conductor (PE ⏚) must be connected according to the relevant regulations.

2

D	3	W		
Directional control valve	**Size DIN NG10 CETOP 05 NFPA D05**	**Wet pin solenoid**	**Spool type**	**Spool position**

3 position spools	
Code	Spool type a 0 b
001	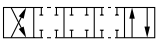
002	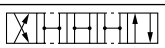
003	
004	
005	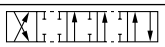
006	
007	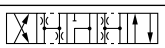
008 [1]	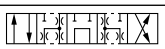
009 [1]	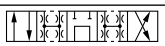
010 [2]	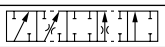
011	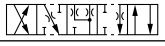
012	
014	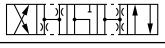
015	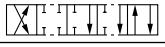
016	
021 [2]	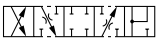
022 [2]	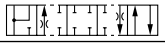
031 [2]	
032 [2]	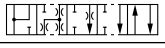
081 [2]	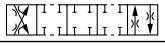
082 [2]	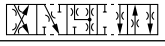
102 [2]	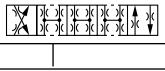

2 position spools	
Code	Spool type a b
020	
026	
030	
101 [2]	

3 position spools			
Code	Spool position		
C	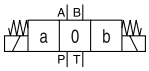		**3 positions.** **Spring offset in position “0“.** **Operated in position “a“ or “b“.**
	Standard	Spool type 008, 009	
E	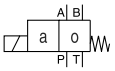 Operated in position “a“.	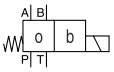 Operated in position “b“.	**2 positions.** **Spring offset in position “0“.**
F	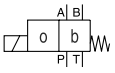 Spring offset in position “b“.	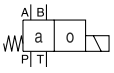 Spring offset in position “a“.	2 positions. Operated in position “0“.
K	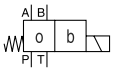 Operated in position “b“.	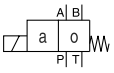 Operated in position “a“.	**2 positions.** **Spring offset in position “0“.**
M	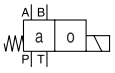 Spring offset in position “a“.	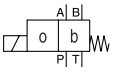 Spring offset in position “b“.	2 positions. Operated in position “0“.

2 position spools		
Code	Spool position	
B	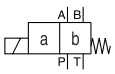	**2 positions.** **Spring offset in position “b“.** **Operated in position “a“.**
D	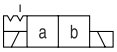	**2 positions.** **Operated in position “a“ or “b“.** **No center or offset position.**
H	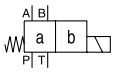	**2 positions.** **Spring offset in position “a“.** **Operated in position “b“.**

[1] Consider specific spool position.

[2] Only available for DC voltage.

[3] To be used in combination with rectifier plugs at 120 VAC / 230 VAC power supply.

[4] DC only.

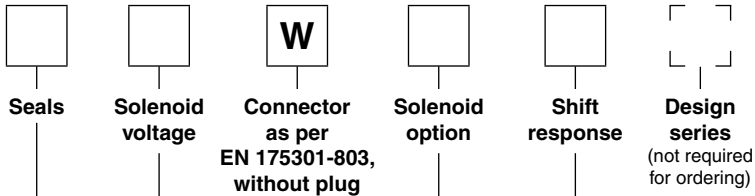

Code	Shift response
omit	**Standard response**
S4 [4]	orifice diameter 1.0 mm
S7 [4]	orifice diameter 1.75 mm

Code	Solenoid option
omit	**manual override (Standard)**
T [4]	without manual override

Code	Solenoid voltage
K	**12 V =**
J	**24 V =**
U [3]	98 V =
G [3]	205 V =
Y	110 V 50 Hz / 120 V 60 Hz
T	230 V 50 Hz / 240 V 60 Hz

Code	Seals
N	**NBR**
V	FPM

Bold letters =
Short-term availability

Further spool types and solenoid voltages on request.

2

The flow curve diagram shows the flow versus pressure drop curves for all spool types. For each spool type, operating position and flow direction the relevant curve number is given in the table below.

	Position b		Position a		Position 0					
Spool	P->A	B->T	P->B	A->T	P->A	P->B	A->T	B->T	P->T	A->B
001	6	5	6	6	–	–	–	–	–	–
002	3	5	3	3	1	1	4	5	1	6
003	2	2	3	1	–	–	3	–	–	–
004	5	4	4	4	–	–	8	8	–	9
005	2	2	2	2	3	–	–	–	–	–
006	1	2	1	3	2	2	–	–	–	3
007	2	1	2	2	–	1	–	2	3	–
010	2	–	2	–	–	–	–	–	–	–
011	2	2	2	2	–	–	11	11	–	11
012	1	2	2	2	10	10	10	10	11	11
014	1	2	2	2	1	–	2	–	3	–
015	2	1	2	2	–	–	–	3	–	–
016	2	2	1	2	–	2	–	–	–	–
020	6	6	5	7	–	–	–	–	–	–
026	5	–	5	–	–	–	–	–	–	–
030	4	5	3	5	–	–	–	–	–	–
	P->B	A->T	P->A	B->T	P->A	P->B	A->T	B->T	P->T	A->B
008	8	7	7	6	–	–	–	–	9	–
009	4	4	5	8	–	–	–	–	9	–

	Position b			Position a		
	P->A	P->B	A->B	P->B	A->T	
021	2	4	8	3	2	
	P->A	B->T		P->A	P->B	A->B
022	3	2		3	2	8

Flow curve diagram

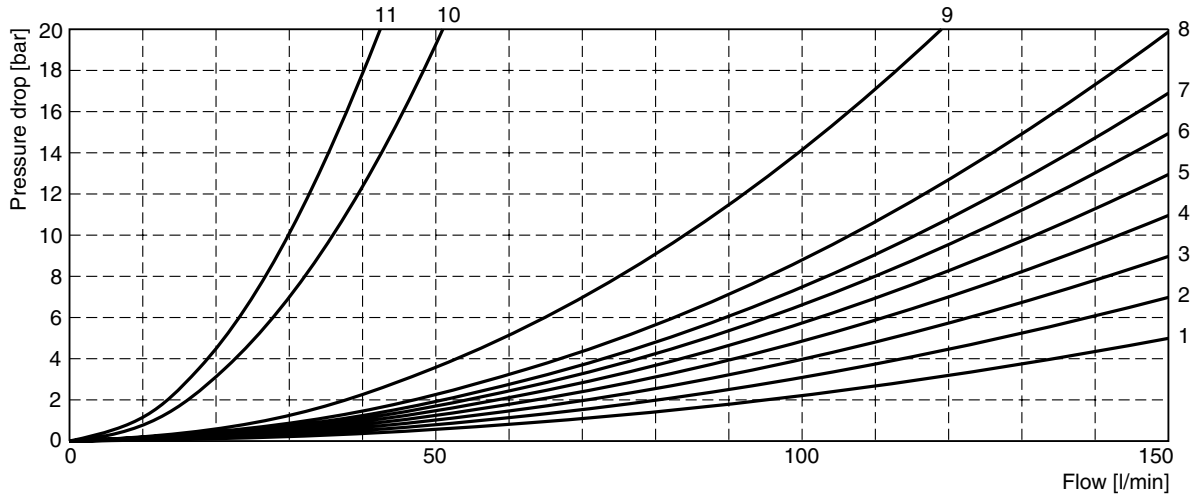

All characteristic curves measured with HLP46 at 50 °C.

The diagrams below specify the shift limits for valves with DC and AC solenoids. Valves with spool position “F” or “M” can only be operated up to 70 % of the limits. The specifications apply to a viscosity of 40 mm²/s and balanced flow conditions. The shift limits can be considerably lower at unbalanced flow conditions. To avoid flow rates beyond the shift limits, a plug-in orifice can be inserted in the P-port.

Shift limits, DC voltage

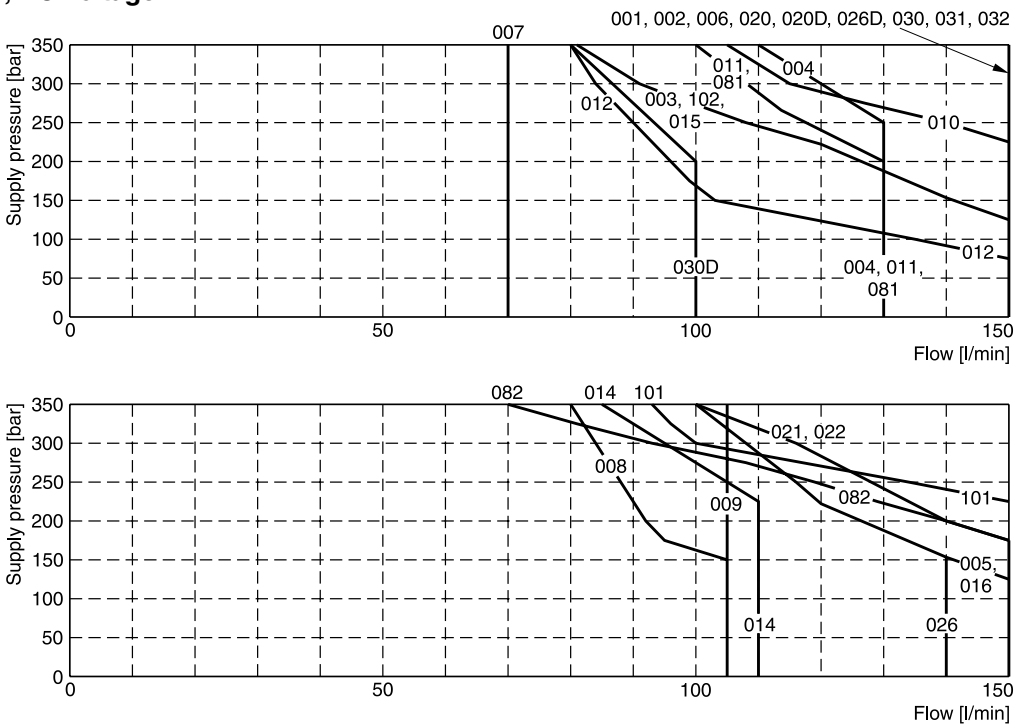

Measured with HLP46 at 50 °C, 90 % U_{nom} and warm solenoids.

Shift limits, AC voltage

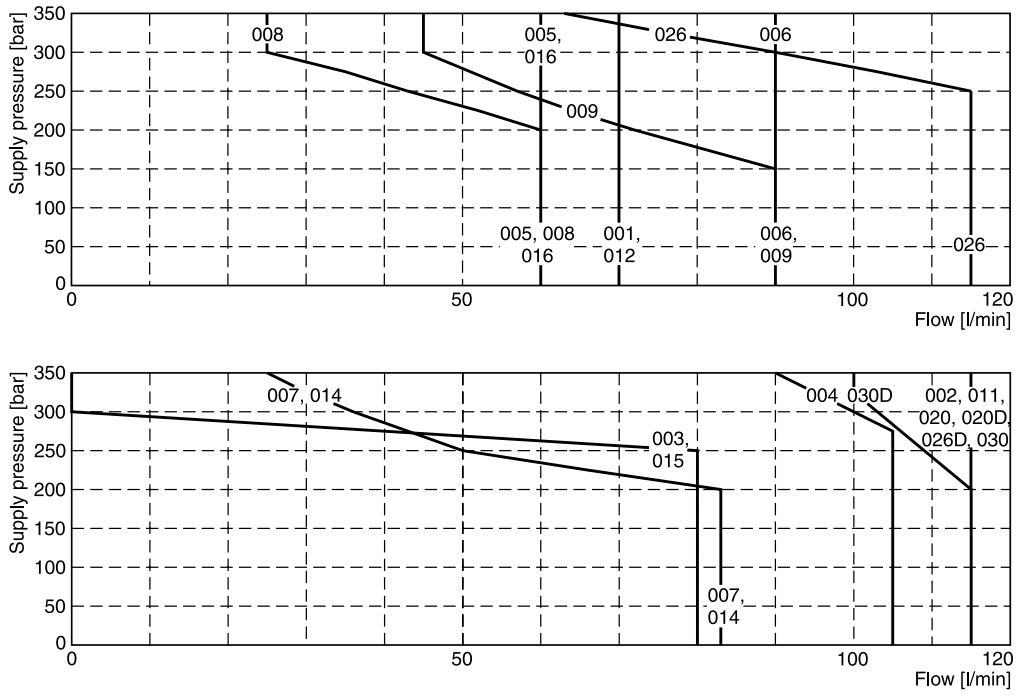

Measured with HLP46 at 50 °C, 95 % U_{nom} and warm solenoids.

2

Shift limits soft shift

The diagrams below specify the shift limits. Valves with spool position “F” or “M” can only be operated up to 70 % of the limits. The specifications apply to a viscosity of 40 mm²/s and balanced flow conditions. The shift limits can be considerably lower at unbalanced flow conditions. To avoid flow rates beyond the shift limits, a plug-in orifice can be inserted in the P-port.

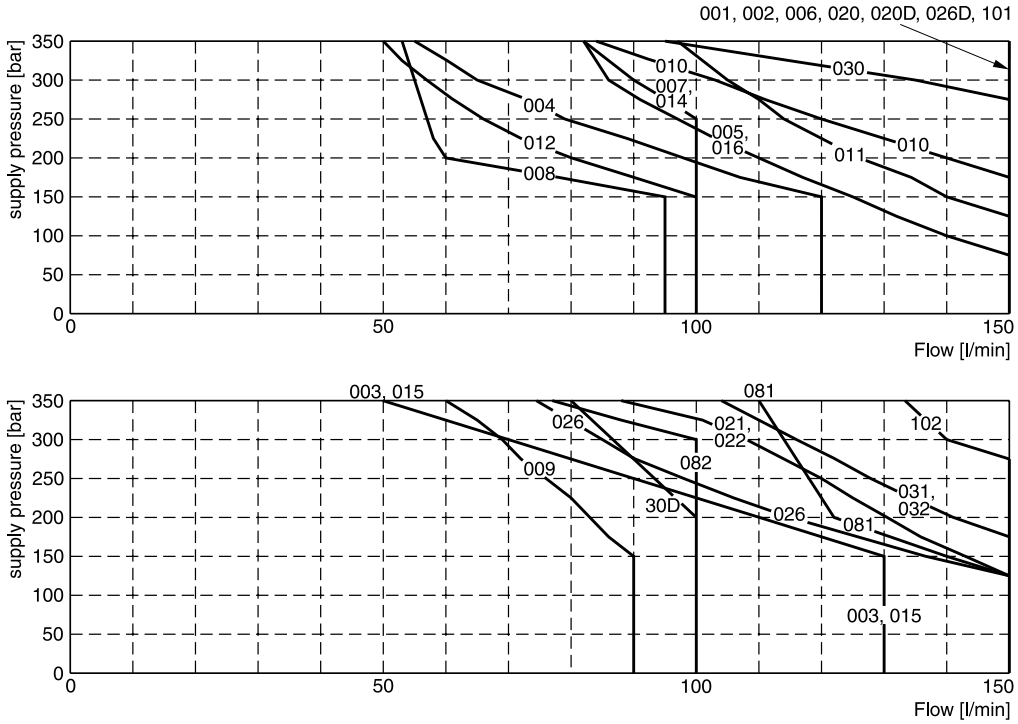

Measured with HLP46 at 50 °C, 90 % U_{nom} and warm solenoids.

Response times D3W Soft Shift

Code	Orifice size	Energize	De-energize
(Standard)	–	105 ms (DC) 21 ms (AC)*	85 ms (DC) 35 ms (AC)*
S4	1.0 mm	320 ms	550 ms
S7	1.75 mm	160 ms	370 ms

Step response times were obtained under the following conditions: HLP46 at 50 °C with the valve operating at 175 bar and 65 l/min.
Published response times are nominal and may vary with spool, flow, pressure and temperature.

Acceleration for different orifice sizes (archived against a valve without soft shift)

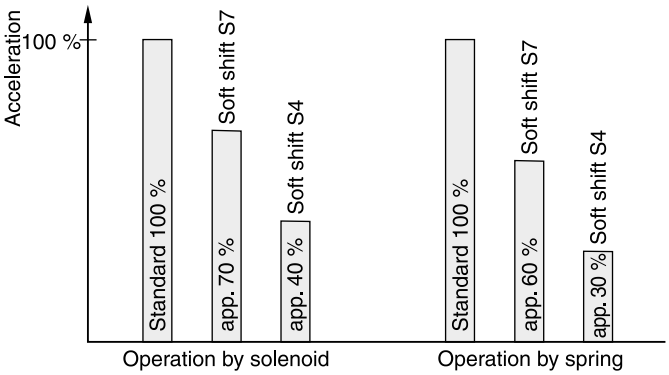

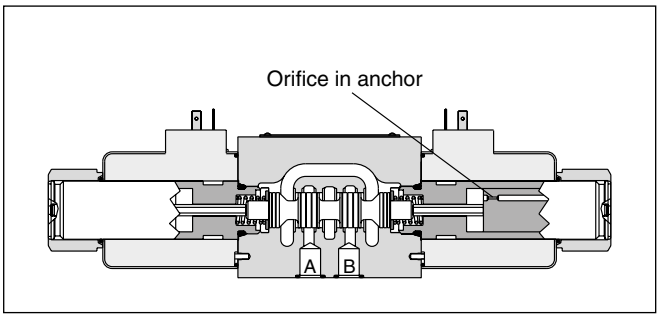

For even softer shifting, the proportional spools 081, 082, 101 and 102 can be used.

* For AC input and soft shift use rectifier plug.

Interface EN 175301-803, DC solenoid

B, E, F -style

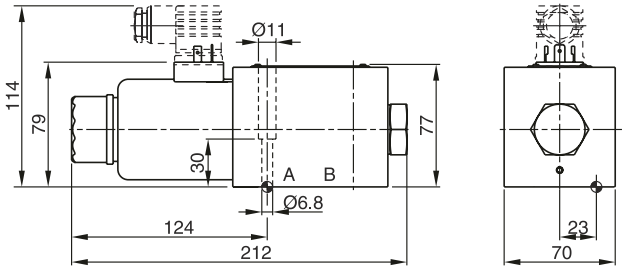

H, K, M -style

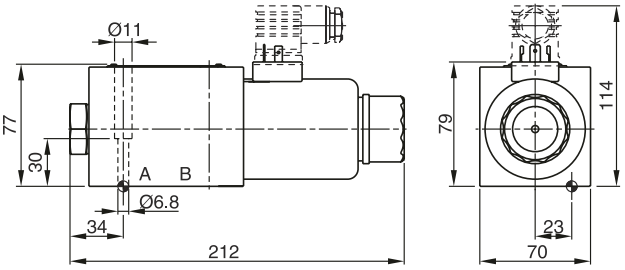

C, D -style

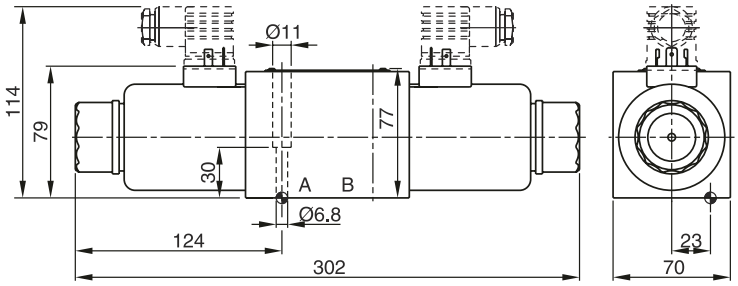

Interface EN 175301-803, AC solenoid

B, E, F -style

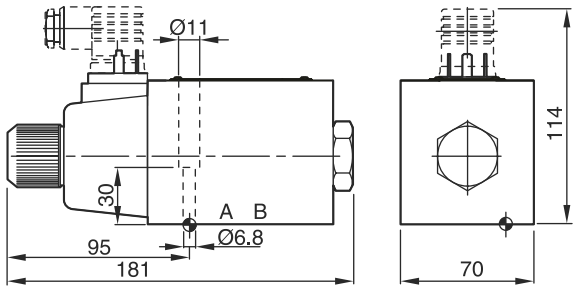

H, K, M -style

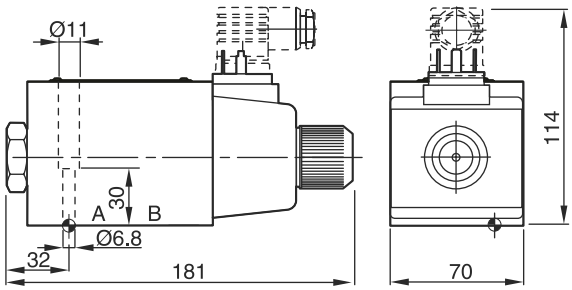

C, D -style

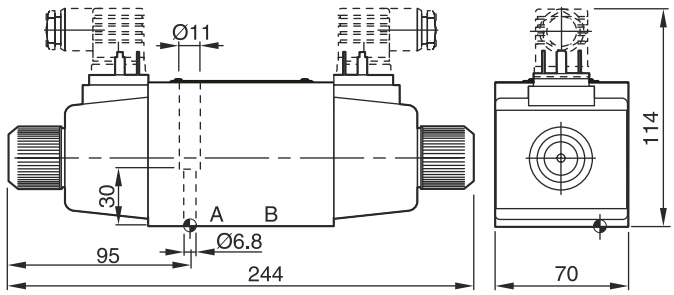

Surface finish	Kit			Kit
R_{max}6.3 ⏥ 0.01/100	BK385	4x M6x40 ISO 4762-12.9	13.2 Nm ±15 %	**NBR: SK-D3W-30** FPM: SK-D3W-V-30

The space necessary to remove the plug per EN 175301-803, design type AF is at least 15 mm.
The torque for the screw M3 of the plug has to be 0.5 to 0.6 Nm.

2

The direct operated valves series D3W with inductive position control are typically used in safety relevant applications. The start or the end position can be monitored.

The fail-safe position of the directional valve during power failure is the spring offset position.

Please find detailed information on the machine directive in the position paper in chapter 1.



D3W*B



D3W*C

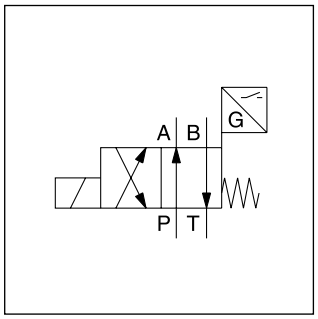

D3W*B

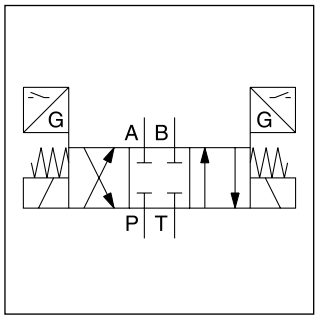

D3W*C

Attention:

The adjustment of the position control is factory set and sealed. Replacement and repairs can only be undertaken by the manufacturer.

D3W*B

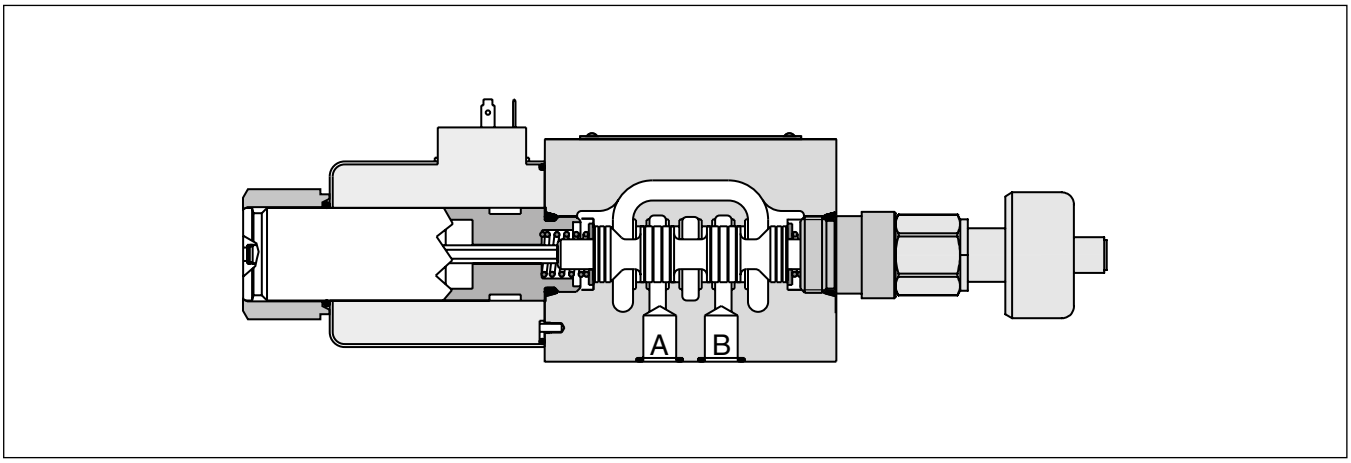

D3W*C

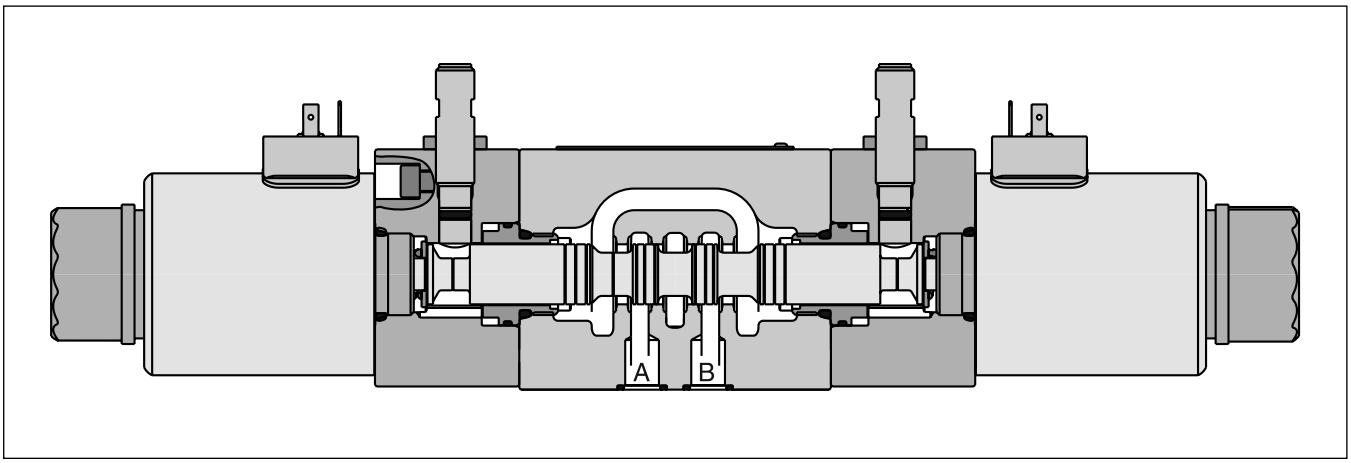

General					
Design		Directional spool valve			
Actuation		Solenoid			
Size		DIN NG10 / CETOP 05 / NFPA D05			
Mounting interface		DIN 24340 A10 / ISO 4401 / CETOP RP 121-H / NFPA D05			
Mounting position		unrestricted, preferably horizontal			
Ambient temperature	[°C]	-20...+60			
$MTTF_D$ value	[years]	150			
Weight	[kg]	5.2			
Hydraulic					
Max. operating pressure	[bar]	P, A, B: 350; T: 210			
Fluid		Hydraulic oil according to DIN 51524			
Fluid temperature	[°C]	-20 ... +70			
Viscosity permitted	[cSt] / [mm²/s]	2.8...400			
Viscosity recommended	[cSt] / [mm²/s]	30...80			
Filtration		ISO 4406 (1999); 18/16/13			
Flow max.	[l/min]	150 (see shift limits)			
Leakage at 50 bar	[ml/min]	Up to 20 per flow path, depending on spool			
Static / Dynamic					
Step response at 95 %		Energized: 105; de-energized: 85			
Electrical characteristics					
Duty ratio		100 % ED; CAUTION: coil temperature up to 150 °C possible			
Max. switching frequency	[1/h]	10000			
Protection class		IP65 in accordance with EN 60529 (with correctly mounted plug-in connector)			
	Code	K	J	U	G
Supply voltage / ripple	[V]	12 V =	24 V =	98 V =	205 V =
Tolerance supply voltage	[%]	±10	±10	±10	±10
Current consumption hold	[A]	3	1.5	0.35	0.18
Power consumption hold	[W]	36	36	34	36
Solenoid connection		Connector as per EN 175301-803, solenoid identification as per ISO 9461.			
Wiring min.	[mm²]	3 x 1.5 recommended			
Wiring length max.	[m]	50 recommended			

With electrical connections the protective conductor (PE ⏚) must be connected according to the relevant regulations.

2

D	3	W		
Directional control valve	**Size DIN NG10 CETOP 05 NFPA D05**	**Wet pin solenoid**	**Spool type**	**Spool position**

3 position spools	
Code	Spool type
	a 0 b
001	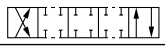
002	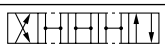
003 [1]	
004	
005 [2]	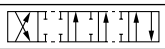
015 [2]	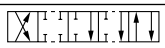
016 [1]	
021 [1]	
022 [2]	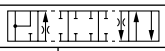

2 position spools	
Code	Spool type
	a b
020	
026	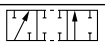
030	

3 position spools		
Code	Spool position	
E	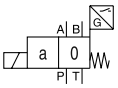	2 positions. Spring offset in position “0“. Operated in position “a“.
F	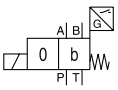	2 positions. Spring offset in position “b“. Operated in position “0“.
K	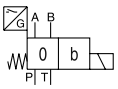	2 positions. Spring offset in position “0“. Operated in position “b“.
M	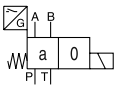	2 positions. Spring offset in position “a“. Operated in position “0“.

2 position spools		
Code	Spool position	
B	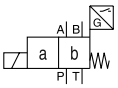	2 positions. Spring offset in position “b“. Operated in position “a“.
H	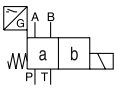	2 positions. Spring offset in position “a“. Operated in position “b“.

[1] Only available for spool pos. “K“ and “M“.

[2] Only available for spool pos. “E“ and “F“.

[3] To be used in combination with rectifier plugs at 120 VAC / 230 VAC power supply.

[4] Please order female connector M12x1 separately (see accessories, female connector M12x1 (order no.: 5004109).

[5] For hydraulic presses according to the safety regulations EN 693, solenoid option “T” (without manual override) and accessories “I4” or “I5” (start position monitored) are required.

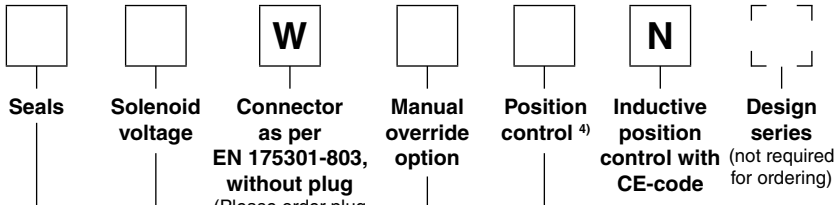

Code	Position control	Spool position
I2	End position monitored side B	E, F, B (Solenoid on a-side)
I5 5)	Start position monitored side B	
I1	End position monitored side A	K, M, H (Solenoid on b-side)
I4 5)	Start position monitored side A	

Code	Solenoid option
omit	manual override (Standard)
T 5)	without manual override

Code	Solenoid voltage
K	12 V =
J	24 V =
U 3)	98 V =
G 3)	205 V =

Code	Seals
N	NBR
V	FPM

Further spool types and solenoid voltages on request.

2

D	3	W					W			N	
Directional control valve	**Size DIN NG10 CETOP 05 NFPA D05**	**Wet pin solenoid**	**Spool type**	**Spool position**	**Seals**	**Solenoid voltage**	**Connector as per EN 175301-803, without plug** (Please order plug separately)	**Manual override option**	**Position control** [3]	**Inductive position control with CE-code**	**Design series** (not required for ordering)

3 position spools		
Code	Spool type	
	a 0 b	
001		
002		
004	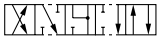	

2 position spools		
Code	Spool type	
	a b	
020 [1]		
026 [1]	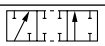	

3 position spools		
Code	Spool position	
C	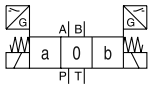	3 positions. Spring offset in position “0“. Operated in position “a“ or “b“.

2 position spools		
Code	Spool position	
D	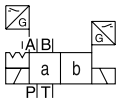	2 positions. Spring offset in position “a“. Operated in position “b“.

Code	Position control	Spool position
I3	End positions	C, D
I6 [4]	Start positions	C

Code	Solenoid option
omit	manual override (Standard)
T [4]	without manual override

Code	Solenoid voltage
K	12 V=
J	24 V=
U [2]	98 V=
G [2]	205 V=

Code	Seals
N	NBR
V	FPM

Further spool types and solenoid voltages on request.

[1] Only available for end position control code “I3“.

[2] To be used in combination with rectifier plugs at 120 VAC / 230 VAC power supply.

[3] Please order plug M12 x 1 separately. Straight plug recommended – no defined position possible for angled plug.

[4] For hydraulic presses according to the safety regulations EN 693, solenoid option “T” (without manual override) and accessory “I6” (start positions) is required.

Single solenoid valve

Electrical characteristics of position control as per IEC 61076-2-101 (M12x1)

Supply voltage	[VDC]	24
Tolernace supply voltage	[%]	±20
Ripple supply voltage	[%]	≤10
Polarity protection	[V]	300
Current consumption without load	[mA]	≤20
Switching hysteresis	[mm]	<0.06
Max. output current per channel, ohmic	[mA]	250
Ambient temperature	[°C]	-20 … +60
Protection		IP65 acc. EN 60529 (with correctly mounted plug-in connector)
Min. distance to next AC solenoid	[m]	0.1
Interface		M12x1 to IEC 61076-2-101
CE conform		EN 61000-4-2 / EN 61000-4-4 / EN 61000-4-6 [1] / ENV 50140 / ENV 50204

[1] Only guaranted with screened cable and female connector

M12 pin assignment

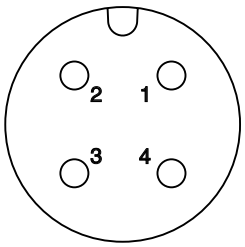

1 + U_S 19.2...28.8 V
2 Out B: normally open
3 0V
4 Out A: normally closed

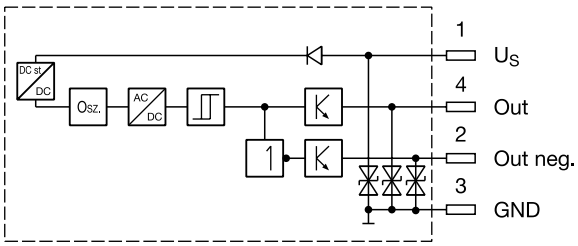

Outputs: Open collector

Definitions

Start position monitored:

The valve is de-energized. The inductive switch gives a signal at the moment when the spool leaves the spring offset position (below 15 % spool stroke).
At the switching point the spool is located within the closed position. It is secured that only the flow paths of the offset position are granted.

End position monitored:

The inductive switch gives a signal before the end position is reached (above 85 % spool stroke).

The switch can only be located on the opposite side of the solenoid for direct operated valves.
Please order plug M12x1 separately (see accessories, plug M12x1; order no.: 5004109).

2

Double solenoid valves

Electrical characteristics of position control as per IEC 61076-2-101 (M12x1)

Protection class		IP65 in accordance with EN 60529 (with correctly mounted plug-in connector)
Ambient temperature	[°C]	-20...+60
Supply voltage Us / ripple	[V]	10...30 / ±10 %
Current consumption without load	[mA]	≤ 10
Max. output current per channel, ohmic	[mA]	200
Min. output load per channel, ohmic	[kOhm]	100
Max. output drop at 0.2 A	[V]	≤ 2
EMC		EN61000-6-4 / EN61000-6-2
Min. distance to next AC solenoid	[m]	>0.1
Interface		M12x1 acc. to IEC 61076-2-101
Wiring min.	[mm²]	3 x 0.14 brad shield recommended
Wiring length max.	[m]	50 recommended

M12 pin assignment

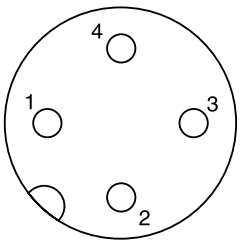

1 Us 10...30 V
2 not connected
3 0 V
4 Out A: normally open

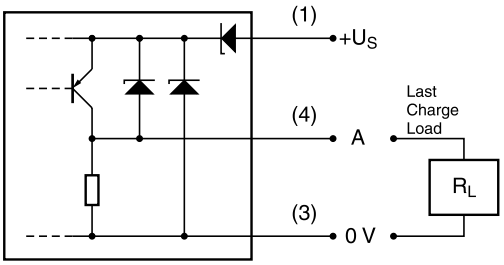

Definitions

Start position monitored:

The valve is de-energized. The inductive switch gives a signal at the moment when the spool leaves the center position (below 15 % spool stroke).
At the switching point the spool is located within the closed position. It is secured that only the flow paths of the offset position are granted.

End position monitored:

The inductive switch gives a signal before the end position is reached (above 85 % spool stroke).

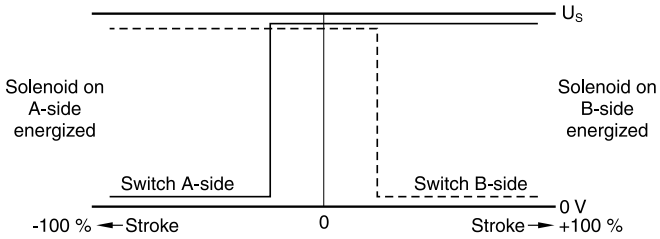

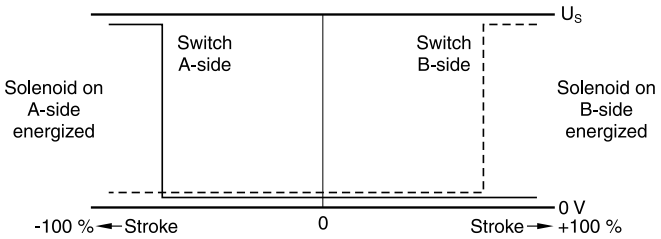

Please order plug M12 x 1 separately. Straight plug recommended – no defined position possible for angled plug.

The flow curve diagram shows the flow versus pressure drop curves for all spool types. The relevant curve number for each spool type, operating position and flow direction is given in the table below.

	Position b		Position a		Position 0					
Spool	P->A	B->T	P->B	A->T	P->A	P->B	A->T	B->T	P->T	A->B
001	6	5	6	6	–	–	–	–	–	–
002	3	5	3	3	1	1	4	5	1	6
003	2	2	3	1	–	–	3	–	–	
004	5	4	4	4	–	–	8	8	–	9
005	2	2	2	2	3	–	–	–	–	–
015	2	1	2	2	–	–	–	3	–	–
016	2	2	1	2	–	2	–	–	–	–
020	6	6	5	7	–	–	–	–	–	–
026	5	–	5	–	–	–	–	–	–	–
030	4	5	3	5	–	–	–	–	–	–

	Position b			Position a		
	P->A	P->B	A->B	P->B	A->T	
021	2	4	8	3	2	
	P->A	B->T		P->A	P->B	A->B
022	3	2		3	2	8

Flow curve diagram

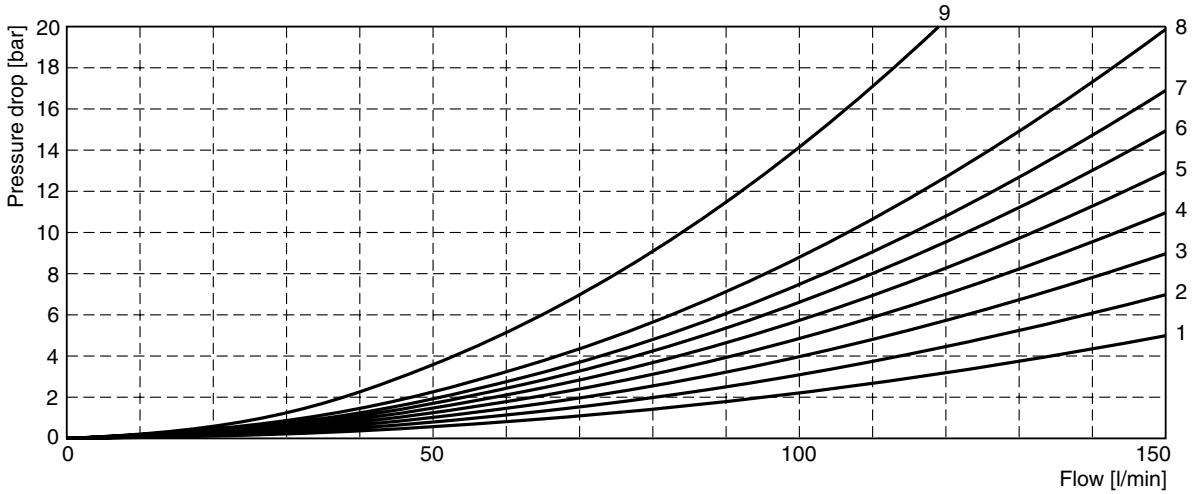

All characteristic curves measured with HLP46 at 50 °C.

Shift limit diagram

The diagram below specifies the shift limits. Valves with spool position “F” or “M” can only be operated up to 70 % of the limits. The specifications apply to a viscosity of 40 mm^2/s and balanced flow conditions. The shift limits can be considerably lower at unbalanced flow conditions. To avoid flow rates beyond the shift limits, a plug-in orifice can be inserted in the P-port.

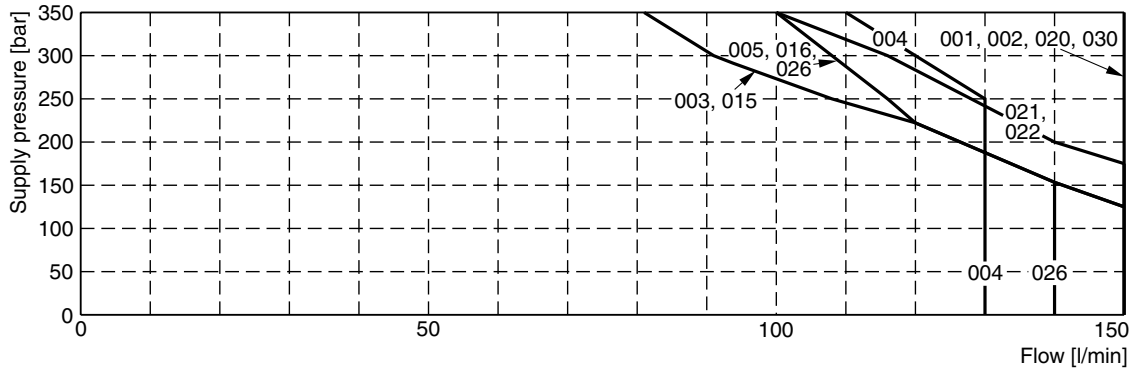

Measured with HLP46 at 50 °C, 90 % U_{nom} and warm solenoids.

2

Interface EN 175301-803, DC solenoid, without plug M12x1[1)]
B, E, F -style

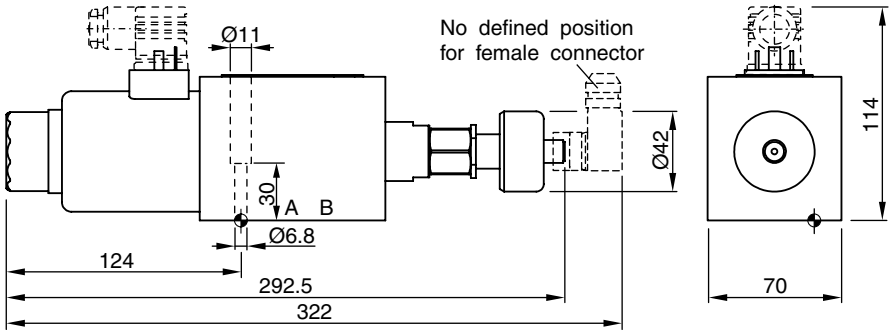

H, K, M -style

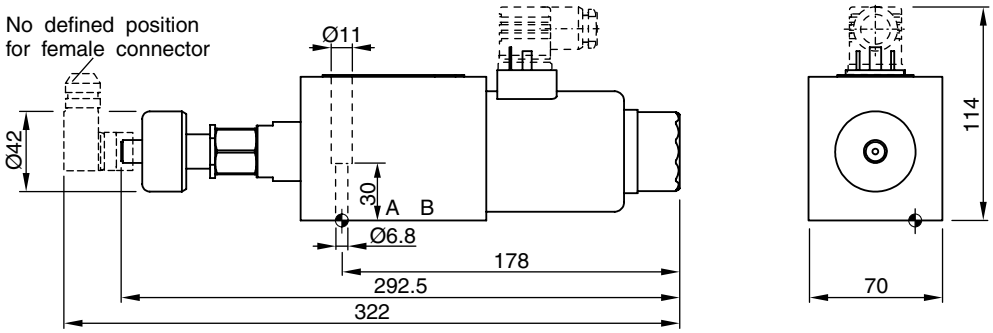

Interface EN175301-803, DC solenoid, without plug M12x1 [2)]
C, D -style

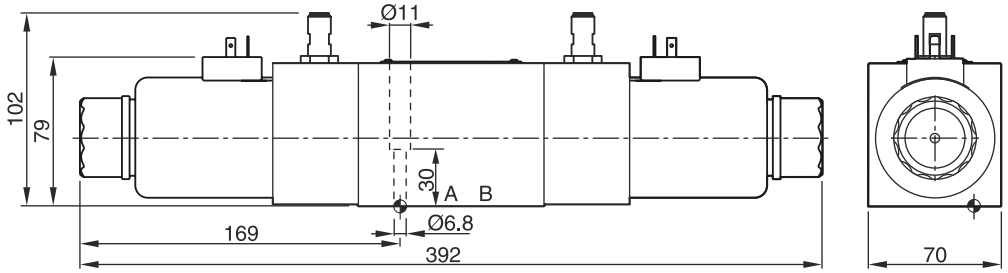

Surface finish	Kit			Kit
$\sqrt{R_{max}6.3}$ 0.01/100	BK385	4x M6x40 ISO 4762-12.9	13.2 Nm ±15 %	**NBR: SK-D3W-30** FPM: SK-D3W-V-30

The space necessary to remove the plug per EN 175301-803, design type AF is at least 15 mm.
The torque for the screw M3 of the plug has to be 0.5 to 0.6 Nm.
The space necessary to remove the M12x1 female connector is at least 22 mm.

Attention:

The adjustment of the position control is factory set and sealed. Replacement and repairs can only be undertaken by the manufacturer.

[1)] Please order plug M12x1 separately (see accessories, plug M12x1; order no.: 5004109).
[2)] Please order plug M12x1 separately. Straight plug recommended - no defined position possible for angled plug.

The D3MW is a solenoid operated directional control valve size NG10 in 3-chamber design. It is direct operated by wet pin solenoids.

The D3MW is designed for mobile and marine applications.

It is based on the D3W series, but offers additional corrosion protection of the valve body, the solenoid coil and the anchor tube as well as the typical solenoid connections for the mobile market such as AMP Junior Timer.



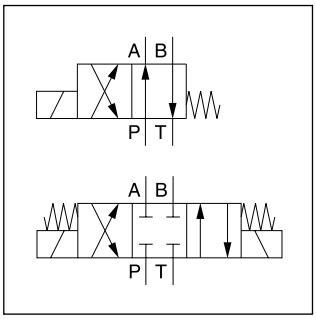

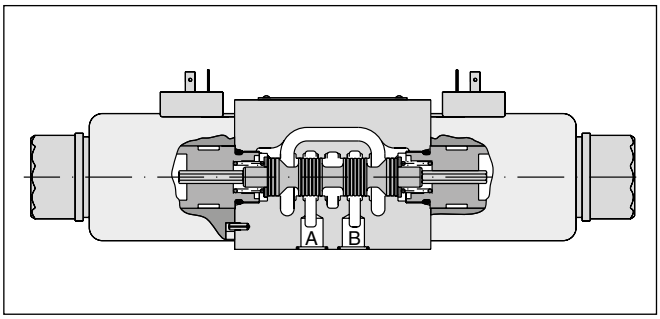

Features:

- High corrosion protection (optional)
- Solenoid connection:
  - Standard (as per EN175301-803)
  - AMP Junior Timer
  - DT04-2P “Deutsch”
- Robust design for rough applications

Technical data

General			
Design		Directional spool valve	
Actuation		Solenoid	
Size		DIN NG10 / CETOP 05 / NFPA D05	
Mounting interface		DIN 24340 A10 / ISO 4401 / CETOP RP 121-H / NFPA D05	
Mounting position		unrestricted, preferably horizontal	
Ambient temperature	[°C]	-25...+60	
$MTTF_D$ value	[years]	150	
Weight	[kg]	4.8 (1 solenoid), 6.3 (2 solenoids)	
Vibration resistance	[g]	10 Sinus 5...2000 Hz acc. IEC 68-2-6 30 Random noise 20...2000 Hz acc. IEC 68-2-36 15 Shock acc. IEC 68-2-27	
Hydraulic			
Max. operating pressure	[bar]	P, A B: 350; T: 210	
Fluid		Hydraulic oil according to DIN 51524	
Fluid temperature	[°C]	-20 ... +70 (NBR: -25...+70)	
Viscosity permitted	[cSt] / [mm²/s]	2.8...400	
Viscosity recommended	[cSt] / [mm²/s]	30...80	
Filtration		ISO 4406 (1999); 18/16/13	
Flow max.	[l/min]	150 (see shift limits)	
Leakage at 50 bar	[ml/min]	Up to 20 per flow path, depending on spool	
Static / Dynamic			
Step response at 95 %	[ms]	Energized: 105 De-energized: 85	
Electrical characteristics			
Duty ratio		100 % ED; CAUTION: coil temperature up to 150 °C possible	
Max. switching frequency	[1/h]	10000	
Protection class		Standard (as per EN175301-803) IP65 in acc. with EN60529 (with correctly mounted plug-in connector) AMP Junior Timer IP67 in acc. with EN60529 (with correctly mounted plug-in connector) DT04-P2 “Deutsch” IP69K (with correctly mounted plug-in connector)	
	Code	K	J
Supply voltage / ripple	[V]	12 V =	24 V =
Tolerance supply voltage	[%]	±10	±10
Current consumption	[A]	3	1.5
Power consumption	[W]	36	36
Solenoid connection		Connector as per EN 175301-803 (code W), AMP Junior Timer (code A), DT04-2P “Deutsch” connector (code J). Solenoid ident. as per ISO 9461.	
Wiring min.	[mm²]	3 x 1.5 recommended	
Wiring length max.	[m]	50 recommended	

With electrical connections the protective conductor (PE ⏚) must be connected according to the relevant regulations.

2

D	3	M	W		
Directional control valve	**Size DIN NG10 CETOP 05 NFPA D05**	**3-chamber valve for mobile and marine applications**	**Wet pin solenoid**	**Spool type**	**Spool position**

3 position spools	
Code	Spool type a 0 b
001	
002	
003	
004	
005	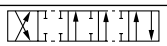
006	
007	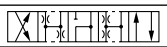
008 [1]	
009 [1]	
010	
011	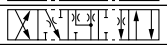
012	
014	
015	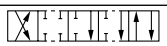
016	
021	
022	
031	
032	
081	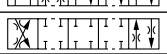
082	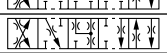
102	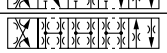

2 position spools	
Code	Spool type a b
020	
026	
030	
101	

3 position spools			
Code	Spool position		
C	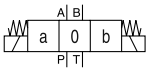		3 positions. Spring offset in position “0“. Operated in position “a“ or “b“.
	Standard	Spool type 008, 009	
E	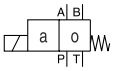 Operated in position “a“.	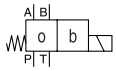 Operated in position “b“.	2 positions. Spring offset in position “0“.
F	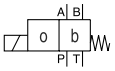 Spring offset in position “b“.	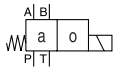 Spring offset in position “a“.	2 positions. Operated in position “0“.
K	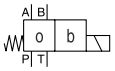 Operated in position “b“.	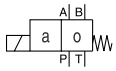 Operated in position “a“.	2 positions. Spring offset in position “0“.
M	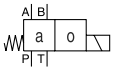 Spring offset in position “a“.	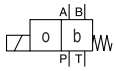 Spring offset in position “b“.	2 positions. Operated in position “0“.

2 position spools		
Code	Spool position	
B	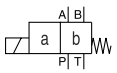	2 positions. Spring offset in position “b“. Operated in position “a“.
D	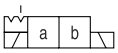	2 positions. Operated in position “a“ or “b“. No center or offset position.
H	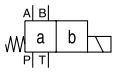	2 positions. Spring offset in position “a“. Operated in position “b“.

[1] Consider specific spool position.
[2] Please order plug separately.
[3] Only for voltage 24 V=.

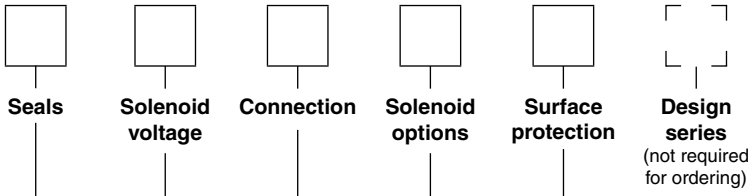

Code	Surface protection
omit	Standard, only for connection “J“ and “A“
1P	Anti corrosion coating acc. to DIN EN ISO 9227 NSS, 200 h for extreme conditions.

Code	Solenoid option
omit	manual override (Standard)
T	without manual override

Code	Connection
W [2)]	Connector as per EN 175301-803
A [2) 3)]	2-pin AMP Junior Timer
J [2) 3)]	Connector DT04-P2 “Deutsch“

Code	Voltage
K	12 V=
J	24 V=

Code	Seals
N	NBR
V	FPM

Further spool types on request.

2

Flow curves

The flow curve diagram shows the flow versus pressure drop curves for all spool types. For each spool type, operating position and flow direction the relevant curve number is given in the table below.

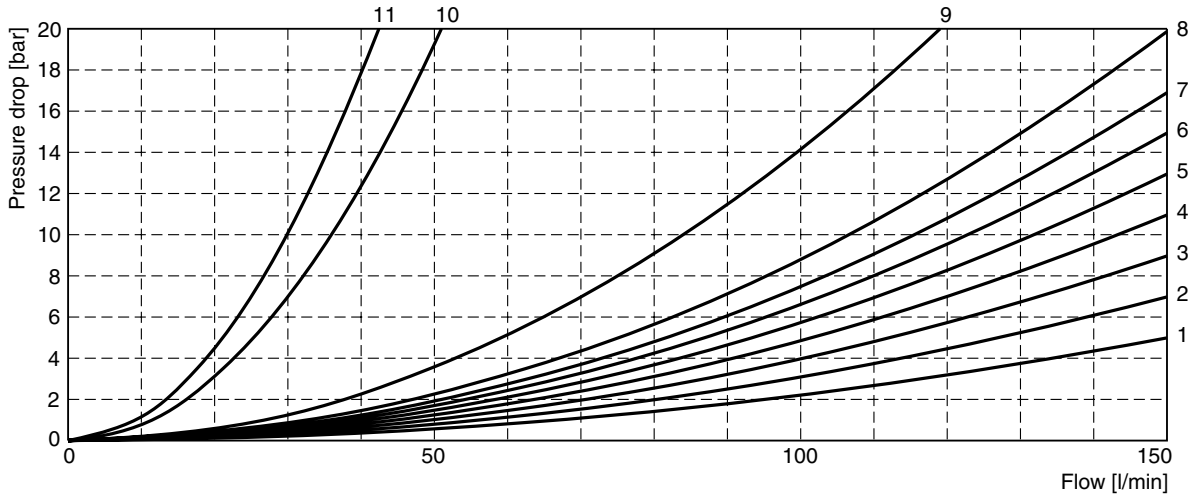

All characteristic curves measured with HLP46 at 50 °C.

	Position b		Position a		Position 0					
Spool	P->A	B->T	P->B	A->T	P->A	P->B	A->T	B->T	P->T	A->B
001	6	5	6	6	–	–	–	–	–	–
002	3	5	3	3	1	1	4	5	1	6
003	2	2	3	1	–	–	3	–	–	–
004	5	4	4	4	–	–	8	8	–	9
005	2	2	2	2	3	–	–	–	–	–
006	1	2	1	3	2	2	–	–	–	3
007	2	1	2	2	–	1	–	2	3	–
010	2	–	2	–	–	–	–	–	–	–
011	2	2	2	2	–	–	11	11	–	11
012	1	2	2	2	10	10	10	10	11	11
014	1	2	2	2	1	–	2	–	3	–
015	2	1	2	2	–	–	–	3	–	–
016	2	2	1	2	–	2	–	–	–	–
020	6	6	5	7	–	–	–	–	–	–
026	5	–	5	–	–	–	–	–	–	–
030	4	5	3	5	–	–	–	–	–	–
	P->B	A->T	P->A	B->T	P->A	P->B	A->T	B->T	P->T	A->B
008	8	7	7	6	–	–	–	–	9	–
009	4	4	5	8	–	–	–	–	9	–

	Position b			Position a		
	P->A	P->B	A->B	P->B	A->T	
021	2	4	8	3	2	
	P->A	B->T		P->A	P->B	A->B
022	3	2		3	2	8

Shift limits, DC voltage

The diagrams below specify the shift limits for valves with DC and AC solenoids. Valves with spool position “F” or “M” can only be operated up to 70 % of the limits. The specifications apply to a viscosity of 40 mm²/s and balanced flow conditions. The shift limits can be considerably lower at unbalanced flow conditions. To avoid flow rates beyond the shift limits, a plug-in orifice can be inserted in the P-port.

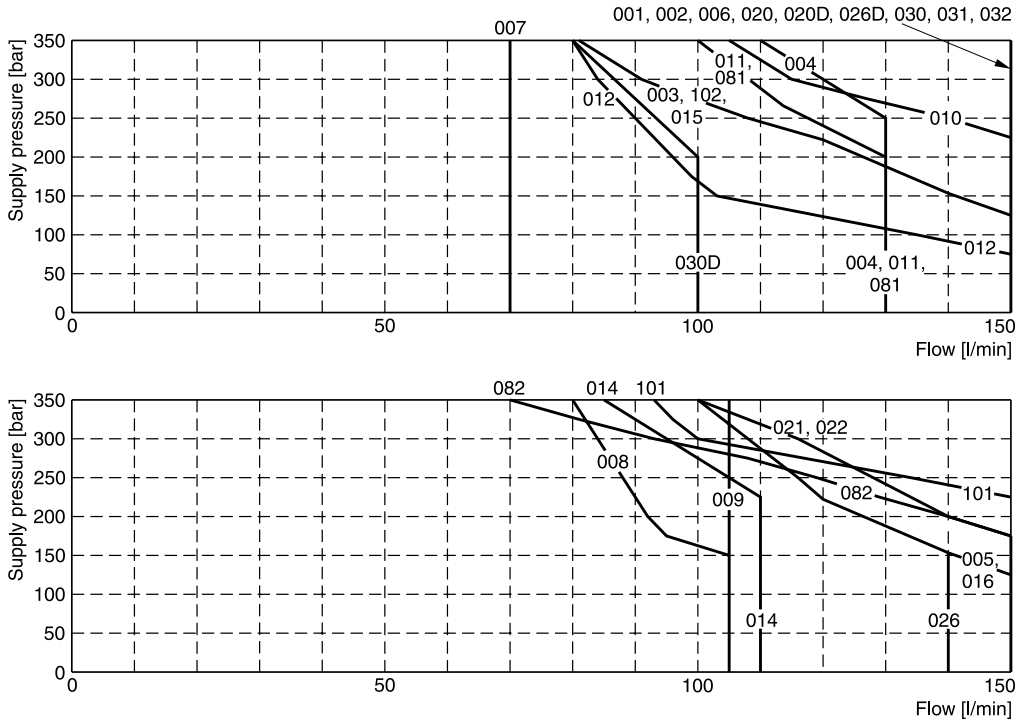

Measured with HLP46 at 50 °C, 90 % U_{nom} and warm solenoids.

2

Interface EN 175301-803

B, E, F -style

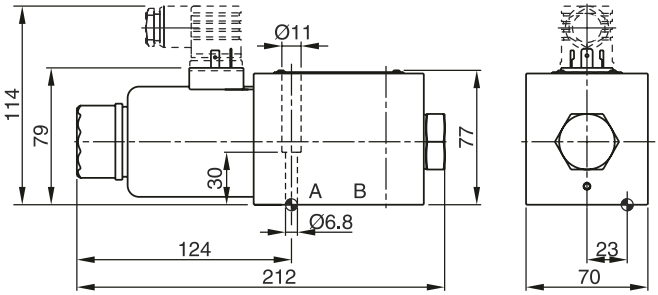

H, K, M -style

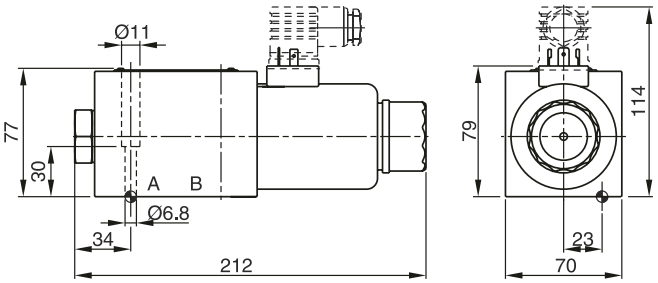

C, D -style

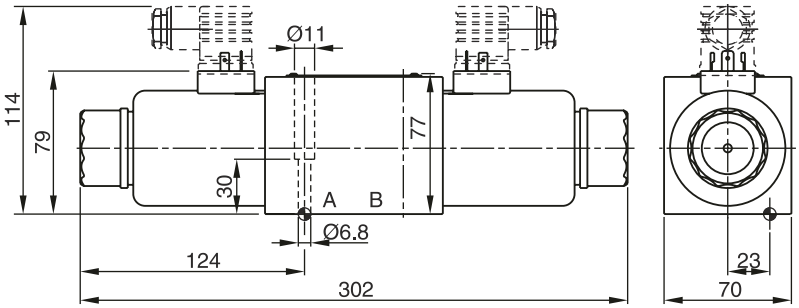

Dimensions with AMP Connector (only C and D -style shown)

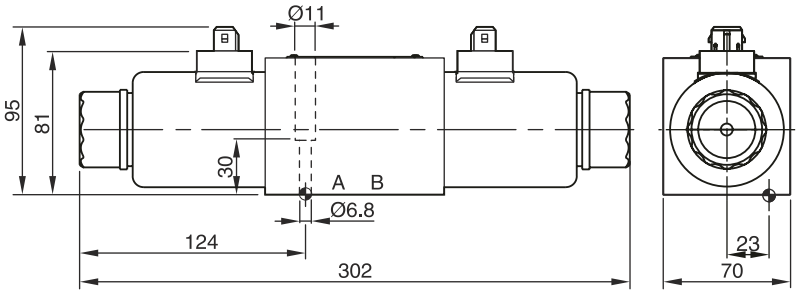

Dimensions with DT04-P2 “Deutsch“ Connector (only C and D -style shown)

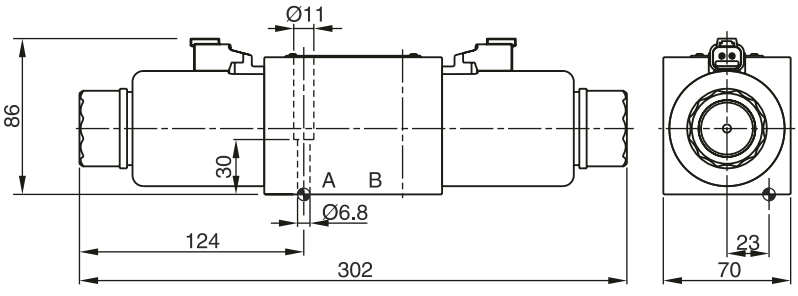

Surface finish	Kit			Kit
R_{max}6.3 ⏥ 0.01/100	BK385	4x M6x40 ISO 4762-12.9	13.2 Nm ±15 %	**NBR: SK-D3W-N-30** FPM: SK-D3W-V-30

The space necessary to remove the plug per EN 175301-803, design type AF is at least 15 mm.
The torque for the screw M3 of the plug has to be 0.5 to 0.6 Nm.

The pilot operated valves are available in 4 sizes:

D31DW	NG10 (standard)
D31NW	NG10 (high flow)
D41VW	NG16
D81VW	NG25 (for port diameter up to 26 mm)
D91VW	NG25 (for port diameter up to 32 mm)
D111VW	NG32

All valves are piloted by a D1VW valve. Please see the separate ordering code for valves with position control.

The minimum pilot pressure must be ensured for all operating conditions of the directional valve.

Additionally spools with a P to T connection in the de-energized position need an external pressure supply (external inlet) or an integral check valve.

Valves with explosion proof solenoids Ex e mb II see catalogue MSG11-3343/UK.

Download of the PDF file at www.parker.com/ISDE, see “Support”.



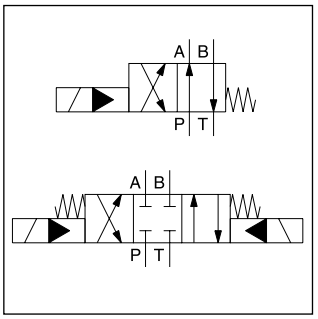

D31DW



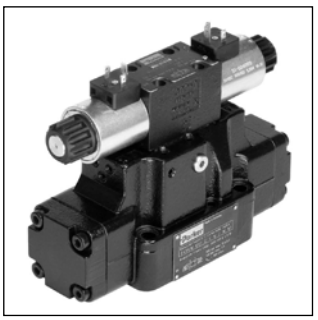

D31NW

D41VW



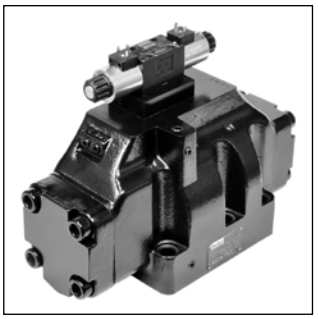

D81VW

D111VW

D81VW

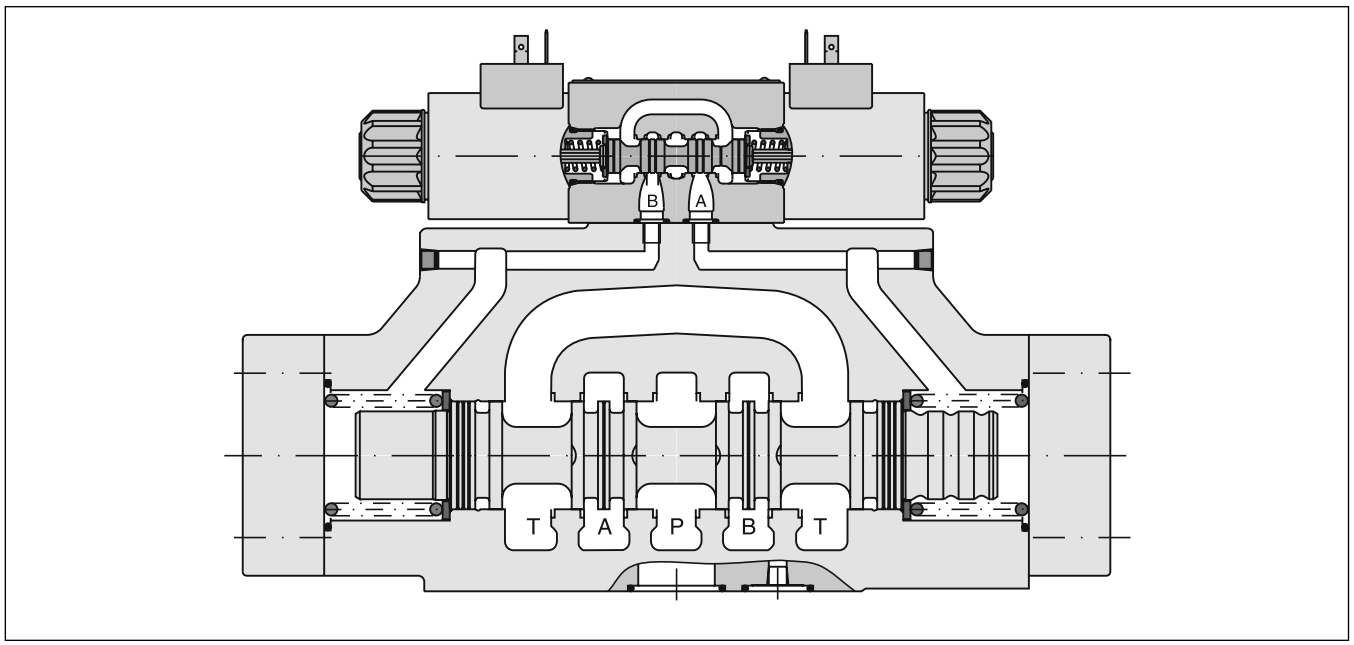

2

Series | **Spool type** | **Spool position**

Code	Bore	Size	Feature
D31DW	Ø11 mm	NG10	
D31NW	Ø11 mm	NG10	High flow
D41VW	Ø20 mm	NG16	
D81VW	Ø26 mm	NG25	
D91VW	Ø32 mm	NG25	High flow
D111VW	Ø50 mm	NG32	

3 position spools		D31D	D31N	D41	D81/91	D111
Code	Spool type a 0 b					
001	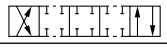	•	•	•	•	•
002	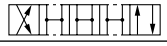	•	•	•	•	•
003		•	•	•	•	
004		•	•	•	•	•
005		•	•	•	•	
006		•	•	•	•	
007	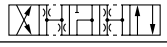	•		•	•	
009[1]	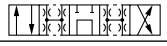	•	•	•	•	•
011		•	•	•	•	
014	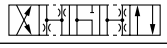	•		•	•	
015	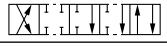	•	•	•	•	
016		•	•	•	•	
021		•	•	•	•	
022	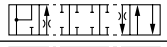	•	•	•	•	
031		•			•	
032	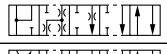	•			•	
054	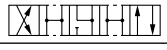			•	•	•
081	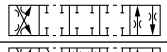	•	•	•	•	•
082	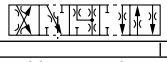	•		•	•	•

2 position spools						
Code	Spool type a b					
020		•	•	•	•	•
026		•		•	•	
030		•	•	•	•	•

3 position spools			
Code	Spool position		
C	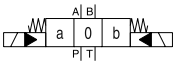		**3 positions. Spring offset in position “0“. Operated in position “a“ or “b“.**
	Standard	Spool type 009	
E	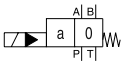 Operated in position “a“.	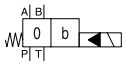 Operated in position “b“.	2 positions. Spring offset in position “0“.
F	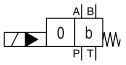 Spring offset in position “b“.	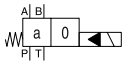 Spring offset in position “a“.	2 positions. Operated in position “0“.
K	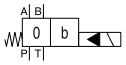 Operated in position “b“.	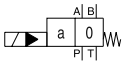 Operated in position “a“.	2 positions. Spring offset in position “0“.
M	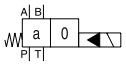 Spring offset in position “a“.	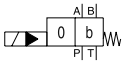 Spring offset in position “b“.	2 positions. Operated in position “0“.
R [2)3)]	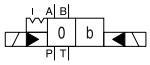 No center in offset position.	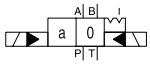 No center in offset position.	2 positions, detent. Operated in position “0“ or “b“.
S [2)3)]	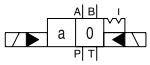 No center in offset position.	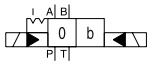 No center in offset position.	2 positions, detent. Operated in position “0“ or “a“. No center in offset position.

2 position spools		
Code	Spool position	
B	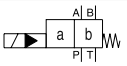	**Spring offset in position “b“. Operated in position “a“.**
D [2)3)]	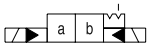	Detent, operated in position “a“ or “b“. No center or offset position.
H	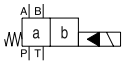	Spring offset in position “a“. Operated in position “b“.

[1)] Consider specific spool position.
[2)] For D31NW and D111VW only pilot valve with detent available.
[3)] D31DW*D/R/S is not available with accessories 3D, 3E or 3F.
[4)] Not for D31DW, D91VW and D111VW available.
[5)] Not for spools 002, 007, 009, 014, 030, 031, 032, 054 available.
[6)] To be used in combination with rectifier plugs at 120 VAC / 230 VAC power supply.
[7)] Only D31, D41, D81, D91 available.

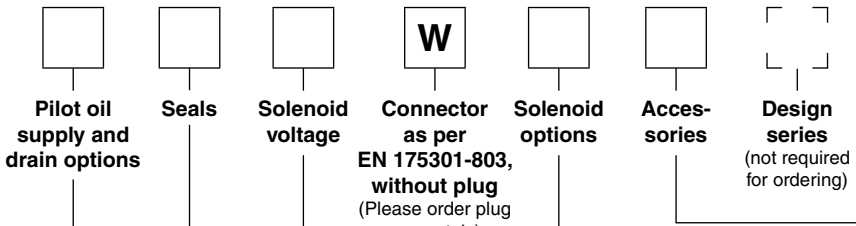

Code	Accessories
omit	**Standard valve w/o accessories**
3A	Pilot choke, meter-out
3B	Pilot choke, meter-in
3C	Pilot with pressure reducing valve
3D [3)7)]	Stroke adjustment side B
3E [3)7)]	Stroke adjustment side A
3F [3)7)]	Stroke adjustment side A and B
3R	meter-out + pressure reducing valve
1T	meter-in + pressure reducing valve

Code	Solenoid option
omit	**manual override (Standard)**
T	without manual override

Code	Solenoid voltage
K	12 V =
J	**24 V =**
U [6)]	98 V =
G [6)]	205 V =
Y	110 V 50 Hz / 120 V 60 Hz
T	230 V 50 Hz / 240 V 60 Hz

Code	Seals
N	**NBR**
V	FPM

Code	Inlet	Outlet
1	**Internal**	**External**
2	External	External
3 [4)]	Integral check valve	External
4 [5)]	**Internal**	**Internal**
5	External	Internal
6 [4)]	Integral check valve	Internal

Bold letters =
Short-term availability

Further spool types and solenoid voltages on request.
Explosion proof solenoids Ex e mb II see catalogue MSG11-3343/UK.
Download of the PDF file at www.parker.com/ISDE, see „Support“.

2

Series | **Spool type** | **Spool position**

Code	Bore	Size	Feature
D31DW	Ø11 mm	NG10	
D31NW	Ø11 mm	NG10	High flow
D41VW	Ø20 mm	NG16	
D81VW	Ø26 mm	NG25	
D91VW	Ø32 mm	NG25	High flow
D111VW	Ø50 mm	NG32	

3 position spools		D31D	D31N	D41	D81/91	D111
Code	Spool type					
	a 0 b					
001	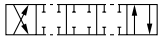	•	•	•	•	•
002	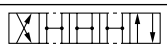	•	•	•	•	•
003		•	•	•	•	
004		•	•	•	•	•
005			•	•	•	
006			•	•	•	
007				•	•	
009[1)]	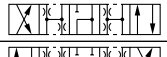	•	•	•	•	•
011	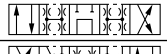	•	•	•	•	
014				•	•	
015		•	•	•	•	
016	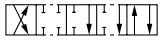		•	•	•	
021		•	•	•	•	
022		•	•	•	•	
031	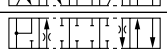				•	
032					•	
054	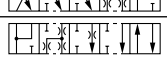			•	•	•
081	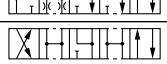			•	•	•
082				•	•	•

2 position spools						
Code	Spool type					
	a b					
020		•	•	•	•	•
026		•		•	•	
030		•	•	•	•	•

3 position spools		
Code	Spool position	
C	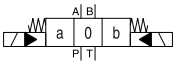	3 positions. Spring offset in position “0“. Operated in position “a“ or “b“.
	Standard / Spool type 009	
E	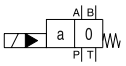 Operated in position “a“. / 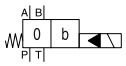 Operated in position “b“.	2 positions. Spring offset in position “0“.
F [2)]	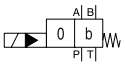 Spring offset in position “b“. / 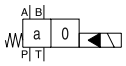 Spring offset in position “a“.	2 positions. Operated in position “0“.
K	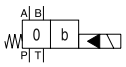 Operated in position “b“. / 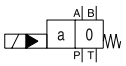 Operated in position “a“.	2 positions. Spring offset in position “0“.
M [2)]	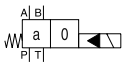 Spring offset in position “a“. / 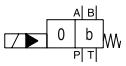 Spring offset in position “b“.	2 positions. Operated in position “0“.

2 position spools	
Code	Spool position
B	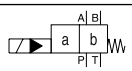 Spring offset in position “b“. Operated in position “a“.
H	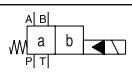 Spring offset in position “a“. Operated in position “b“.

Attention:

The adjustment of the position control is factory set and sealed.
Replacement and repairs can only be undertaken by the manufacturer.

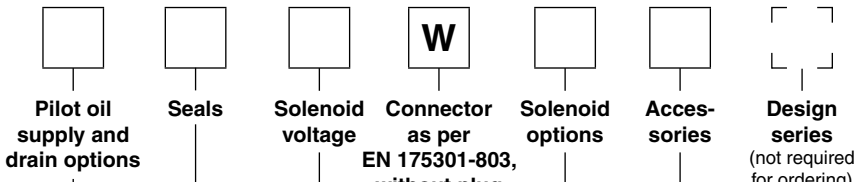

Code	Spool position	Position control
I3N [7]	C	End position monitored, side A and B
I6N [7]		Start position monitored, side A and B
I2N [7]	C, B, E, F (all spools) C, K, M (spool 009)	End position monitored, side B
I5N [7]		Start position monitored, side B
I1N [7]	C, H, K, M (all spools) C, E, F (spool 009)	End position monitored, side A
I4N [7]		Start position monitored, side A

Code	Solenoid option
omit	manual override (Standard)
T [6]	without manual override

Code	Solenoid voltage
K	12 V =
J	24 V =
U [5]	98 V =
G [5]	205 V =

Code	Seals
N	NBR
V	FPM

Code	Inlet	Outlet
1	Internal	External
2	External	External
3 [3]	Integral check valve	External
4 [4]	Internal	Internal
5	External	Internal
6 [3]	Integral check valve	Internal

[1] Consider specific spool position.
[2] Not for D31NW.
[3] Not for D31DW, D91VW and D111VW available.
[4] Not for spools 002, 007, 009, 014, 030 available.
[5] To be used in combination with rectifier plugs at 120 VAC / 230 VAC power supply.
[6] For hydraulic presses according to the safety regulations EN 693, solenoid option “T“ (without manual override) and accessories “I4N“, “I5N“ or “I6N“ (start position monitored) are required.
[7] Please order female connector M12x1 separately (see accessories, female connector M12x1 (order no.: 5004109). The monitor switch has to be located on the side to which the spool moves from the spring offset position. For 4/3-way valves two switches are required.

2

General							
Design			Directional spool valve				
Actuation			Solenoid				
Series			D31DW	D31NW	D41VW	D81/91VW	D111VW
Size			NG10	NG10	NG16	NG25	NG32
Weight (1/ 2 solenoids)		[kg]	6.0 / 6.6	7.6 / 8.1	9.7 / 10.3	17.9 / 18.6	67.4 / 68.0
Mounting interface			DIN 24340 A10 ISO 4401 NFPA D05	DIN 24340 A10 ISO 4401 NFPA D05	DIN 24340 A16 ISO 4401 NFPA D07	DIN 24340 A25 ISO 4401 NFPA D08	DIN 24340 A32 ISO 4401 NFPA D10
			CETOP RP 121-H				
Mounting position			unrestricted, preferably horizontal				
Ambient temperature		[°C] [°C]	-25...+60 (without inductive position control) -20...+60 (with inductive position control)				
$MTTF_D$ value		[years]	75				
Hydraulic							
Max. operating pressure		[bar] [bar]	Pilot drain internal: P, A B, X: 350; T, Y: 105 Pilot drain external: P, A B, T, X: 350; Y: 105				
Fluid			Hydraulic oil according to DIN 51524				
Fluid temperature		[°C] [°C]	-20 ... +70 (NBR: -25...+70), (without inductive position control) -20...+70 (with inductive position control)				
Viscosity permitted		[cSt] / [mm²/s]	2.8...400				
Viscosity recommended		[cSt] / [mm²/s]	30...80				
Filtration			ISO 4406 (1999); 18/16/13				
Flow max.		[l/min]	150	170	300	700	2000
Leakage at 350 bar (per flow path) *depending on spool		[ml/min]	up to 100*	72...422*	up to 200*	up to 800*	up to 5000*
Opening pressure integral check valve		[bar]	n.a.	see p/Q diagram	see p/Q diagram	see p/Q diagram	n.a.
Minimum pilot supply pressure		[bar]	5	7	5		
Static / Dynamic							
Step response at 95 %		[ms]	Energized / De-energized				
DC solenoids	Pilot pressure	50 bar	60 / 40	50 / 60	95 / 65	150 / 170	470 / 390
		100 bar	55 / 40	50 / 60	75 / 65	110 / 170	320 / 390
		250 bar	55 / 40	50 / 50	60 / 65	90 / 170	210 / 390
		350 bar	55 / 40	50 / 50	60 / 65	85 / 170	200 / 390
AC solenoids	Pilot pressure	50 bar	40 / 30	30 / 50	75 / 55	130 / 155	450 / 375
		100 bar	35 / 30	30 / 50	65 / 55	90 / 155	300 / 375
		250 bar	35 / 30	30 / 50	40 / 55	70 / 155	190 / 375
		350 bar	35 / 30	30 / 50	40 / 55	65 / 155	180 / 375
Electrical characteristics							
Duty ratio			100 % ED; CAUTION: coil temperature up to 150 °C possible				
Protection class			IP65 in accordance with EN 60529 (with correctly mounted plug-in connector)				
		Code	K	J	U	G	Y	T
Supply voltage / ripple		[V]	12 V =	24 V =	98 V =	205 V =	110 V at 50 Hz/ 120 V at 60 Hz	230 V at 50 Hz/ 240 V at 60 Hz
Tolerance supply voltage		[%]	±10	±10	±10	±10	±5	±5
Current consumption	hold	[A]	2.72	1.29	0.33	0.13	0.58 / 0.49	0.31 / 0.26
Current consumption	in rush	[A]	2.72	1.29	0.33	0.13	2.1 / 2.0	1.05 / 1.0
Power consumption	hold		32.7 W	31 W	31.9 W	28.2 W	64 / 59 VA	68 / 62 VA
Power consumption	in rush		32.7 W	31 W	31.9 W	28.2 W	231 / 240 VA	231 / 240 VA
Solenoid connection			Connector as per EN 175301-803, solenoid identification as per ISO 9461.					
Wiring min.		[mm²]	3 x 1.5 recommended					
Wiring length max.		[m]	50 recommended					

With electrical connections the protective conductor (PE ⏚) must be connected according to the relevant regulations.

Electrical characteristics of position control as per IEC 61076-2-101 (M12x1), NG16/NG25/NG32

Supply voltage	[VDC]	24
Tolernace supply voltage	[%]	±20
Ripple supply voltage	[%]	≤10
Polarity protection	[V]	300
Current consumption without load	[mA]	≤20
Switching hysteresis	[mm]	<0.06
Max. output current per channel, ohmic	[mA]	250
Ambient temperature	[°C]	-20 … +60
Protection		IP65 acc. EN 60529 (with correctly mounted plug-in connector)
Min. distance to next AC solenoid	[m]	0.1
Interface		M12x1 to IEC 61076-2-101
CE conform		EN 61000-4-2 / EN 61000-4-4 / EN 61000-4-6 [1] / ENV 50140 / ENV 50204

M12 pin assignment

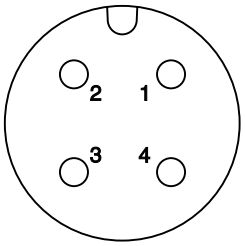

1 + US 19.2...28.8 V
2 Out B: normally open
3 0 V
4 Out A. normally closed

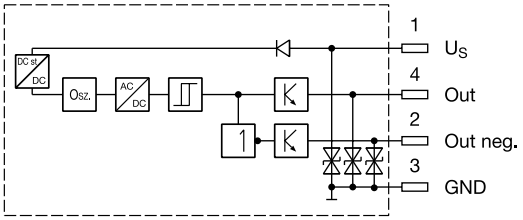

Outputs: Open collector

Definitions

Start position monitored:

The valve is de-energized. The inductive switch gives a signal at the moment when the spool leaves the spring offset position (below 15 % spool stroke).
At the switching point the spool is located within the closed position. It is secured that only the flow paths of the offset position are granted.

End position monitored:

The inductive switch gives a signal before the end position is reached (above 85 % spool stroke).

Please order plug M12x1 separately (see accessories, plug M12x1; order no.: 5004109).

[1] Only guaranteed with screened cable and female connector

2

The flow curve diagrams show the flow versus pressure drop curves for all spool types. The relevant curve number for each spool type, operating position and flow direction is given in the tables below.

D31DW and D31NW

Spool Code	Curve number									
	P-A		P-B		P-T		A-T		B-T	
	*DW	*NW	*DW	*NW	*DW	*NW	*DW	*NW	*DW	*NW
001	4	3	4	3	–	–	3	2	3	5
002	2	3	3	3	3	7	3	4	4	3
003	2	2	4	3	–	–	1	4	2	4
004	4	2	3	3	–	–	2	4	3	4
005	1	2	4	4	–	–	2	1	3	4
006	2	8	3	9	–	–	3	7	4	9
007	4	–	2	–	5	–	2	–	2	–
009	2	4	2	6	8	6	5	4	6	10
011	3	3	2	3	–	–	3	2	3	4
014	2	–	4	–	5	–	2	–	3	–
015	4	2	2	2	–	–	2	1	2	4
016	4	4	1	3	–	–	1	2	2	4
020	4	6	4	4	–	–	4	3	4	6
021	3	–	4	7	–	–	2	8	–	–
022	5	4	2	–	–	–	–	9	4	–
026	3	–	3	–	–	–	–	–	–	–
030	4	5	3	3	–	–	3	2	3	5
031	3	–	4	–	–	–	1	–	–	–
032	5	–	2	–	–	–	–	–	2	–
081	6	–	6	–	–	–	7	–	7	–
082	7	–	6	–	–	–	5	–	7	–

D31DW

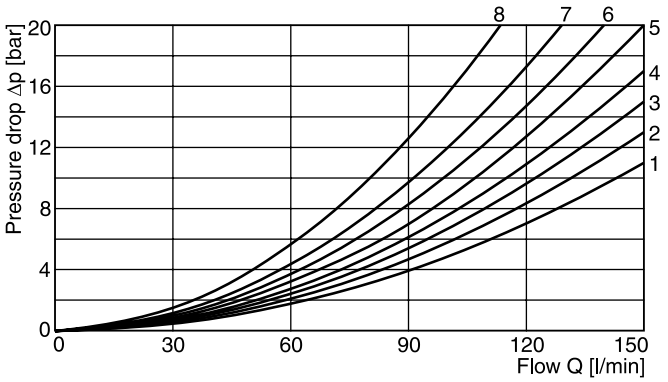

D31NW

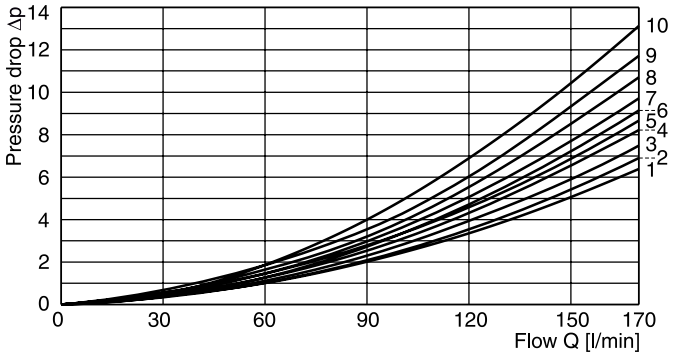

D41VW

Spool Code	Curve number				
	P-A	P-B	P-T	A-T	B-T
001	1	1	–	4	5
002	1	2	6	4	6
003	1	2	–	5	6
004	1	1	–	5	5
005	2	2	–	3	5
006	1	2	–	3	6
007	1	1	6	4	5
009	2	9	8	7	10
011	1	1	–	4	5
014	1	1	6	4	5
015	1	2	–	4	6
016	2	2	–	3	5
020	3	5	–	3	5
021	2	8	–	2	–
022	8	2	–	–	3
026	3	5	–	–	–
030	2	3	–	6	7
031	–	–	–	–	–
032	–	–	–	–	–
054	2	3	–	6	7
081	–	–	–	–	–
082	–	–	–	–	–

D41VW

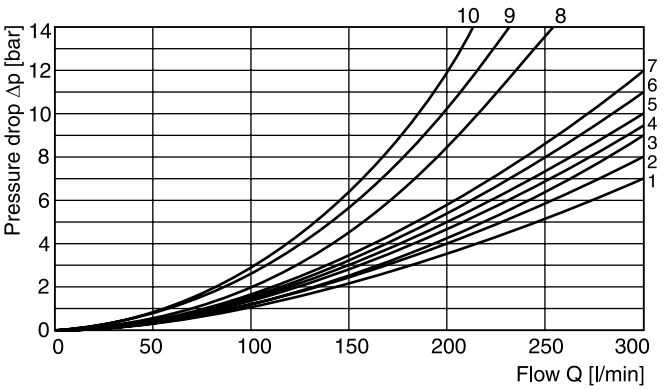

All characteristic curves measured with HLP46 at 50 °C.

D81/D91VW and D111VW

Spool Code	Curve number									
	P-A		P-B		P-T		A-T		B-T	
	D8/9	D11	D8/9	D11	D8/9	D11	D8/9	D11	D8/9	D11
001	3	5	2	5	–	–	3	4	5	1
002	2	5	1	5	1	5	3	4	5	1
003	4	–	2	–	–	–	3	–	6	–
004	4	5	3	5	–	–	3	4	5	1
005	1	–	2	–	–	–	4	–	5	–
006	2	–	2	–	–	–	4	–	6	–
007	3	–	1	–	7	–	3	–	5	–
009	4	3	8	3	9	2	4	3	10	1
011	3	–	2	–	–	–	3	–	5	–
014	1	–	2	–	8	–	3	–	5	–
015	3	–	3	–	–	–	4	–	5	–
016	3	–	3	–	–	–	4	–	5	–
020	6	5	5	5	–	–	6	3	8	1
021	5	–	10	–	–	–	3	–	–	–
022	10	–	5	–	–	–	–	–	5	–
026	6	–	5	–	–	–	–	–	–	–
030	3	5	2	5	–	–	3	4	5	1
054	4	5	3	5	–	–	3	4	5	1

D81/D91VW

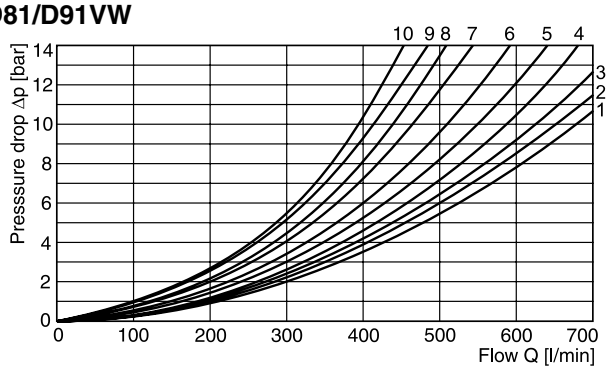

D111VW

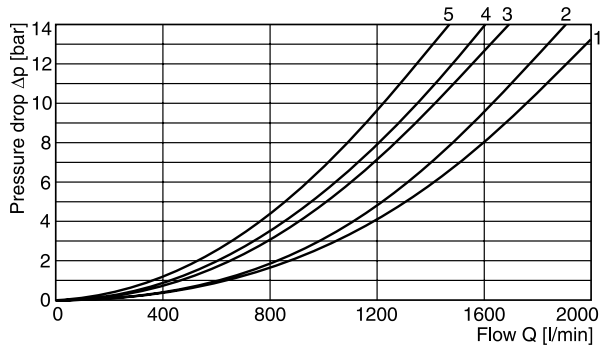

Integral check valve in the P port

Mounting an integral check valve in the P port is necessary to build up pilot pressure for valves with P to T connection and internal pilot oil supply. The pressure difference at the integral check valve (see performance curves) is to be added to all flow curves of the P-port of the main valve. Directional valves with an integral check valve are available for the series D31NW, D41VW and D81VW.

Flow curve D31NW

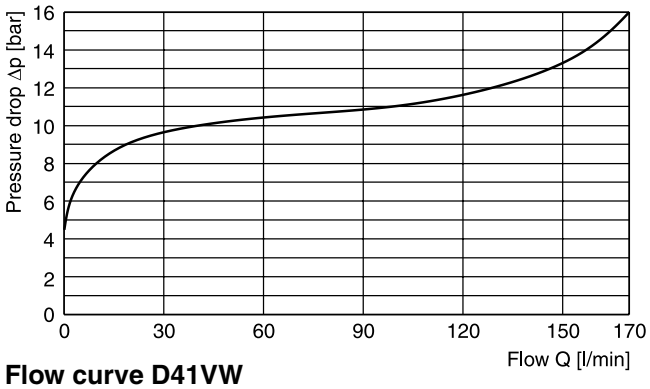

Flow curve D41VW

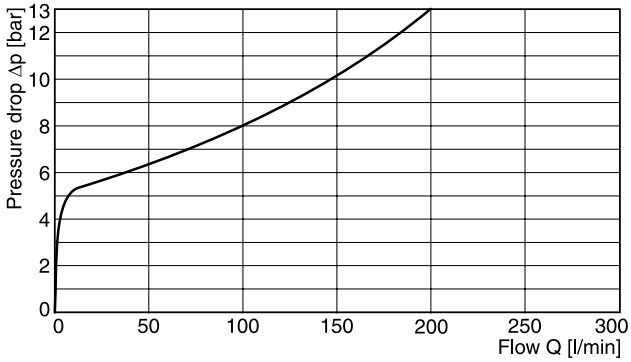

Flow curve D81VW

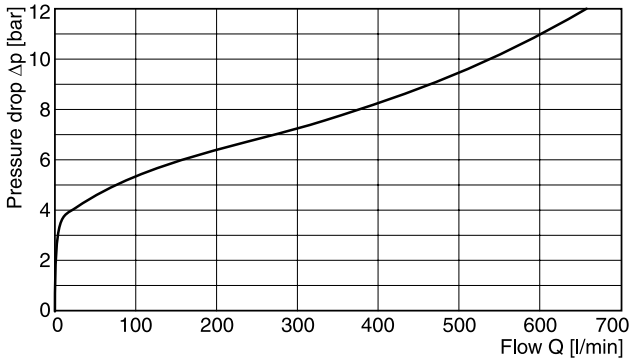

All characteristic curves measured with HLP46 at 50 °C.

2

D31DW

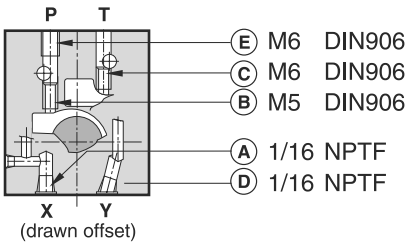

○ open, ● closed

Pilot oil Inlet	Outlet	A	B	C	D	E
internal	external	●	○	●	○	Orifice Ø1.2
external	external	○	●	●	○	Orifice Ø1.2
internal	internal	●	○	○	●	Orifice Ø1.2
external	internal	○	●	○	●	Orifice Ø1.2

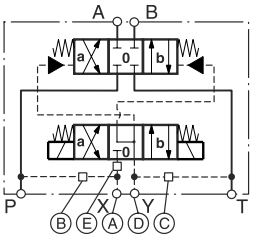

D31NW

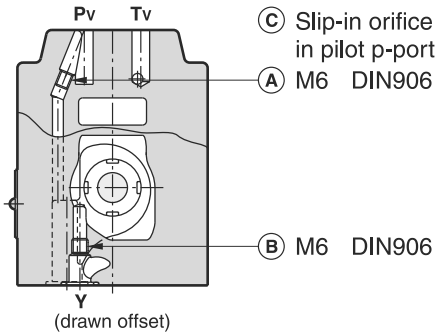

○ open, ● closed

Pilot oil Inlet	Outlet	A	B	C
internal	external	○	●	Orifice Ø1.0
external	external	●	●	Orifice Ø1.0
internal	internal	○	○	Orifice Ø1.0
external	internal	●	○	Orifice Ø1.0

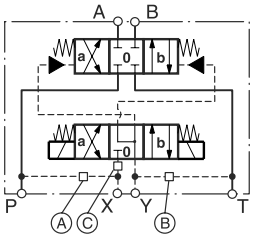

D41VW

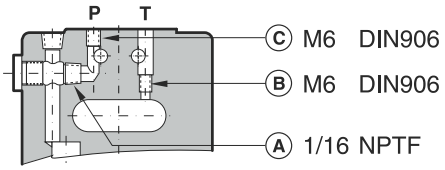

○ open, ● closed

Pilot oil Inlet	Outlet	A	B	C
internal	external	○	●	Orifice Ø1.5
external	external	●	●	Orifice Ø1.5
internal	internal	○	○	Orifice Ø1.5
external	internal	●	○	Orifice Ø1.5

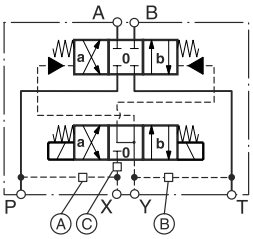

D81/91VW

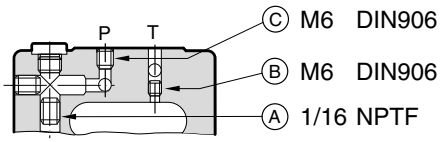

○ open, ● closed

Pilot oil Inlet	Outlet	A	B	C
internal	external	○	●	Orifice Ø1.5
external	external	●	●	Orifice Ø1.5
internal	internal	○	○	Orifice Ø1.5
external	internal	●	○	Orifice Ø1.5

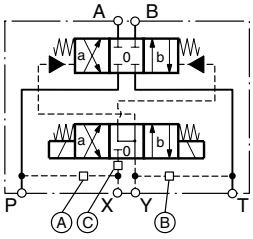

D111VW

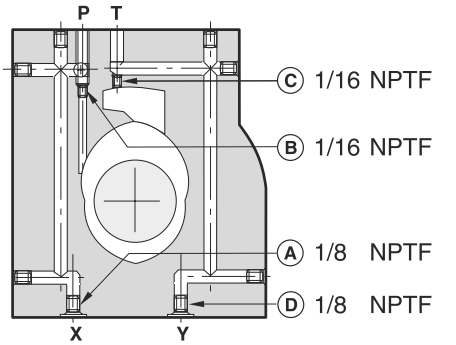

○ open, ● closed

Pilot oil Inlet	Outlet	A	B	C	D
internal	external	○	Orifice Ø1.5	●	○
external	external	Orifice Ø1.5	●	●	○
internal	internal	○	Orifice Ø1.5	○	○
external	internal	Orifice Ø1.5	●	○	○

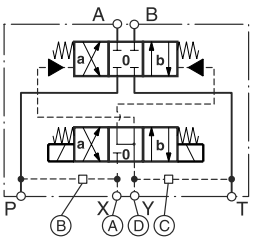

All orifice sizes for standard valves.

D31DW

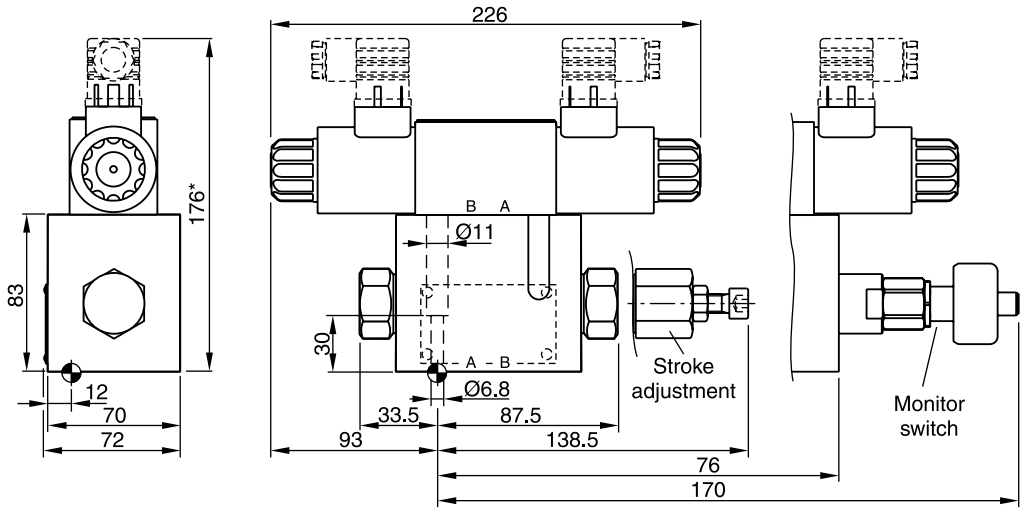

Surface finish	Kit			Kit
$R_{max}6.3$ 0.01/100	BK385	4x M6x40 ISO 4762-12.9	13.2 Nm ±15 %	**NBR: SK-D31DW-N-91** FPM: SK-D31DW-V-91

D31NW

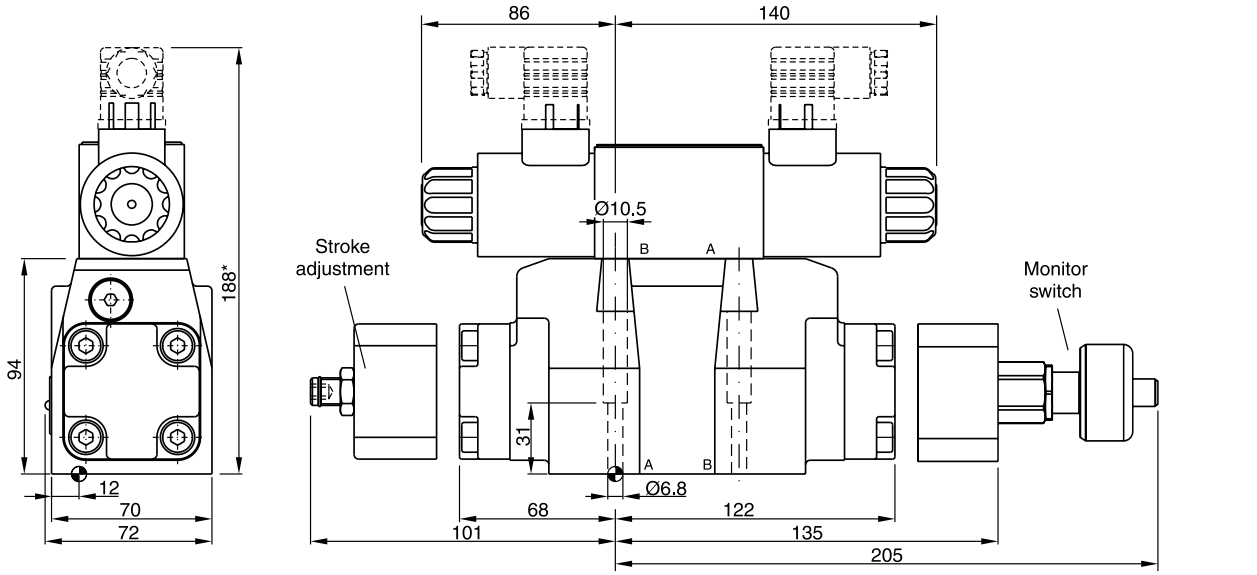

Surface finish	Kit			Kit
$R_{max}6.3$ 0.01/100	BK385	4x M6x40 ISO 4762-12.9	13.2 Nm ±15 %	**NBR: SK-D31NW-N-91** FPM: SK-D31NW-V-91

The space necessary to remove the plug per EN 175301-803, design type AF is at least 15 mm.
The torque for the screw M3 of the plug has to be 0.5 to 0.6 Nm.

* Please add for each sandwich plate +40 mm (pressure reducing valve, choke valve meter-in/-out).

2

D41VW

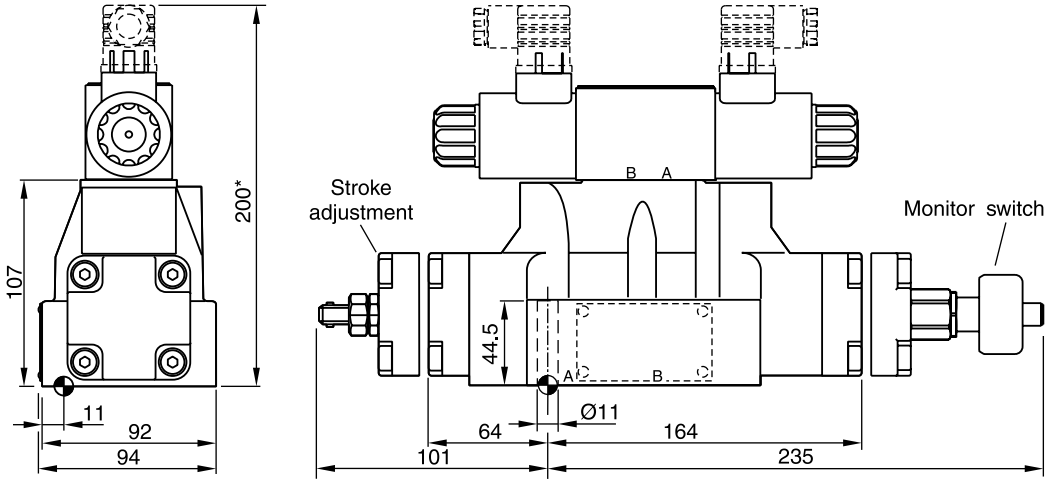

Surface finish	Kit			Kit
R_{max}6.3 ⏥ 0.01/100	BK320	4x M10x60 2x M6x55 ISO 4762-12.9	63 Nm ±15 % 13.2 Nm ±15 %	**NBR: SK-D41VW-N-91** FPM: SK-D41VW-V-91

D81VW, D91VW

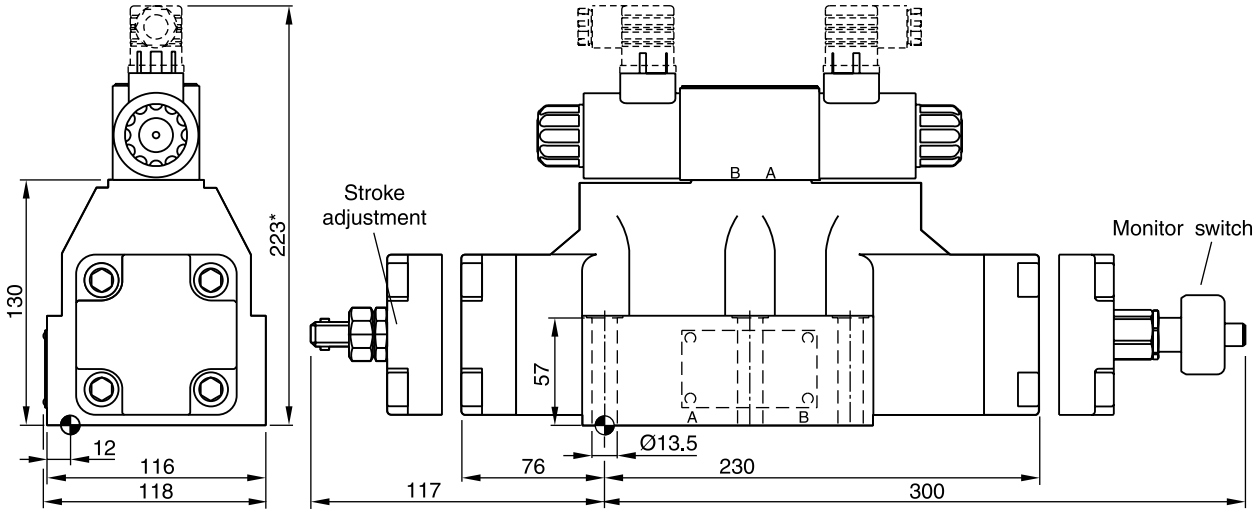

Surface finish	Kit			Kit
R_{max}6.3 ⏥ 0.01/100	BK360	6x M12x75 ISO 4762-12.9	108 Nm ±15 %	**NBR: SK-D81VW-N-91 / SK-D91VW-N-91** FPM: SK-D81VW-V-91 / SK-D91VW-V-91

The space necessary to remove the plug per EN 175301-803, design type AF is at least 15 mm.
The torque for the screw M3 of the plug has to be 0.5 to 0.6 Nm.

* Please add for each sandwich plate +40 mm (pressure reducing valve, choke valve meter-in/-out).

2

D111VW

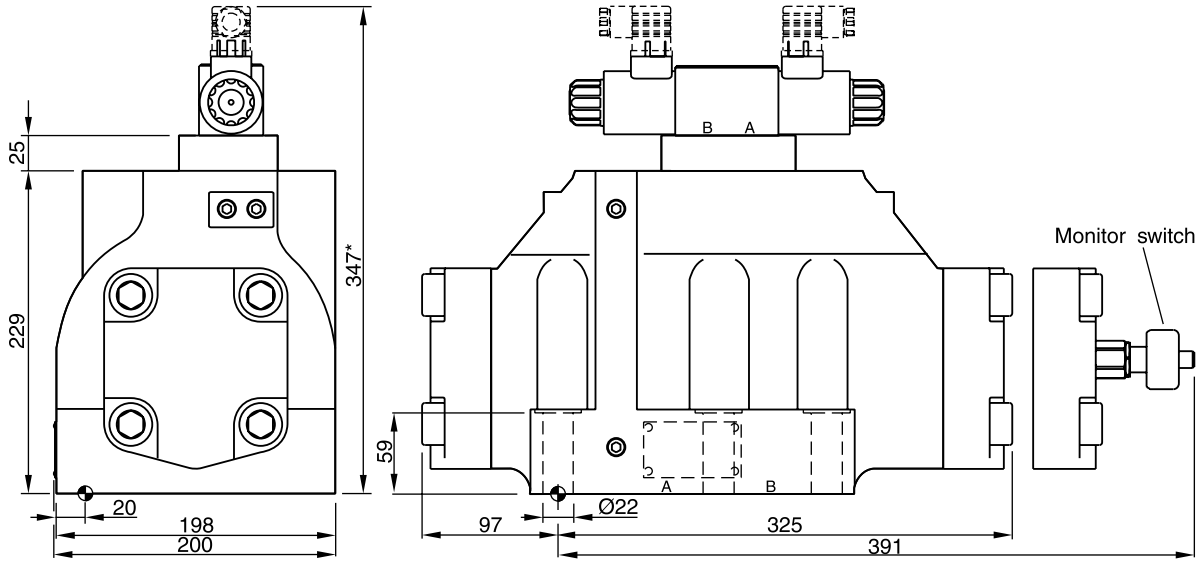

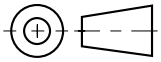

Surface finish	Kit			Kit
R_{max}6.3 0.01/100	BK386	6x M20x90 ISO 4762-12.9	517 Nm ±15 %	**NBR: SK-D111VW-N-91** FPM: SK-D111VW-V-91

The space necessary to remove the plug as per EN 175301-803, design type AF is at least 15 mm.
The torque for the screw M3 of the plug has to be 0.5 to 0.6 Nm.

* Please add for each sandwich plate +40 mm (pressure reducing valve, choke valve meter-in/-out).

2

The series of regenerative and hybrid directional control valves are available in four sizes:

Direct operated valve:

D3DWR	NG10	Hybrid function with adaptor plate (see chapter 12)

Pilot operated valves:

D31NWR	NG10	Hybrid function with adaptor plate (see chapter 12)
D41VWR, D41VWZ	NG16	
D91VWR, D91VWZ	NG25	
D111VWR, D111VWZ	NG32	

The innovative integrated regenerative function in the A-line allows energy saving circuits with differential cylinders. The hybrid version can switch between regenerative mode and standard mode.

Features

- Energy saving A-regeneration
- Switchable hybrid version



D41VWR



D41VWZ

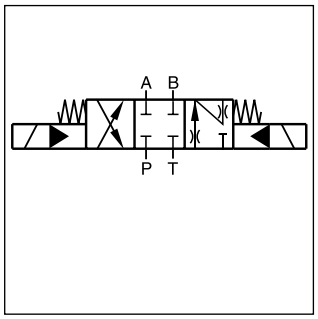

Regenerative D*1VWR

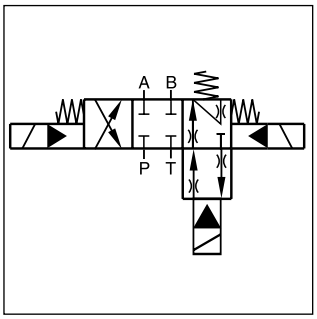

Hybrid D*1VWZ

Regenerative valve D*1VWR

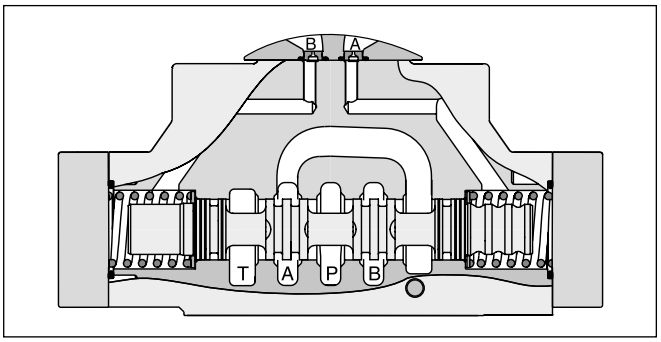

Hybrid valve D*1VWZ

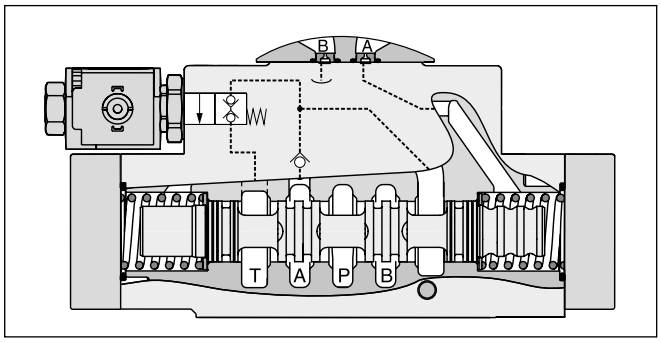

D*1VWR (regenerative valve)
Cylinder extending

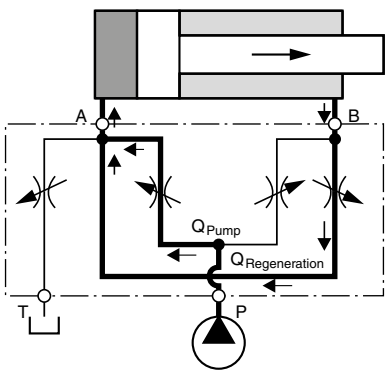

D*1VWZ (hybrid valve)
Cylinder extending
regenerative mode
(high speed)

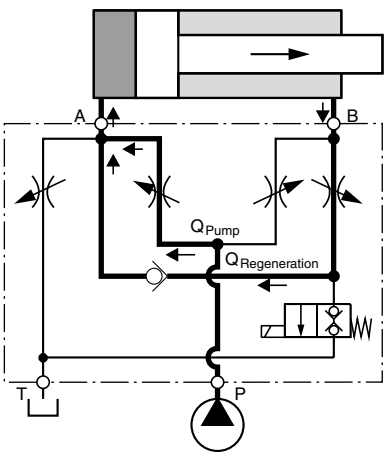

Cylinder extending
standard mode
(high force)

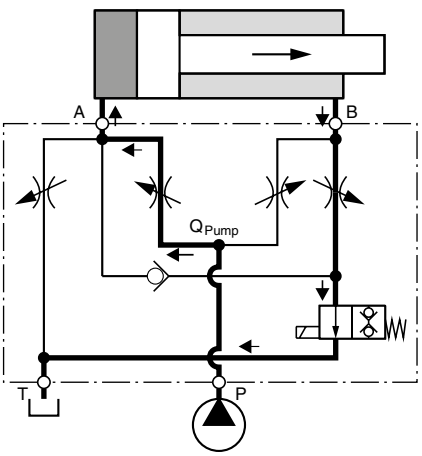

D3DWR

D3DW		C			J	W		
Direct operated valve NG10	**Spool type**	**3 spool position** Spring offset in position “0“. Operated in position “a“ or “b“. 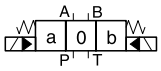	**Drain port**	**Seals**	**Solenoid voltage 24 V =**	**Connector as per EN 175301-803, without connector** (Please order plug separately)	**Solenoid options**	**Design series** (not required for ordering)

Regenerative function [1]	
Code	Spool type
R01	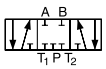
R04	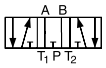
R81	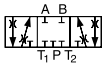
R82	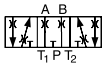

Code	Drain port
omit	Standard
9	for high pressure in the connection T1 (tank) or T2 (regenerative function) the connection X and Y can be used as drain port

Code	Solenoid option
omit	manual override (Standard)
T	without manual override

Code	Seals
N	NBR
V	FPM

[1] For regenerative and hybrid function please refer to solutions with sandwich- and adaptor plates "A10-1664 / A10-1665L / H10-1662 / H10-1666L" in chapter 12.

2

D31NWR, D*1VWR and D*1VWZ

		C			J	W			
Series	**Spool type**	**3 spool position** Spring offset in position “0“. Operated in position “a“ or “b“.	**Pilot oil supply and drain options**	**Seals**	**Solenoid voltage 24 V =**	**Connector as per EN 175301-803, without connector** (Please order plug separately)	**Solenoid options**	**Acces-sories**	**Design series** (not required for ordering)

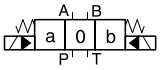

Code	Bore	Size
D31NW	Ø11 mm	NG10
D41VW	Ø20 mm	NG16
D91VW	Ø32 mm	NG25
D111VW	Ø50 mm	NG32

Regenerative function [2]		Hybrid function [1] [2]	
Code	Spool type	Code	Spool type
R01	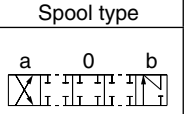	Z01	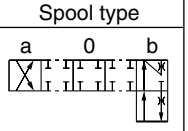
R04 [3]	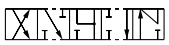	Z04 [3]	
R54 [4]		Z54 [4]	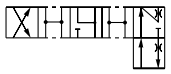
R81	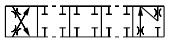	Z81	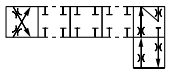
R82	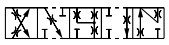	Z82	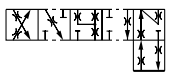

Code	Accessories
omit	Standard valve w/o accessories
3A	Pilot choke, meter-out
3B	Pilot choke, meter-in
3C	Pilot with pressure reducing valve
3D [3]	Stroke adjustment side B
3E [3]	Stroke adjustment side A
3F [3]	Stroke adjustment side A and B
3R	Meter-out + pressure reducing valve
1T	Meter-in + pressure reducing valve

Code	Solenoid option
omit	manual override (Standard)
T	without manual override

Code	Seals
N	NBR
V	FPM

Code	Inlet	Outlet
1	Internal	External
2	External	External
4	Internal	Internal
5	External	Internal

[1] Not for D31NW.

[2] For regenerative and hybrid function for D31NW (NG10) please refer to solutions with sandwich- and adaptor plates "A10-1664 / A10-1665L / H10-1662 / H10-1666L" in chapter 12.

D31NW spool type: R01 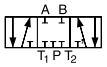 R04 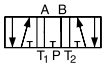

R81 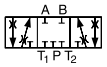 R82 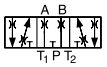

[3] Not for D111VW.

[4] Only for D111VW.

General						
Design		Directional spool valve				
Actuation		Solenoid				
Series		**D3DWR**	**D31NWR**	**D41VW**	**D81/91VW**	**D111VW**
Size		NG10	NG10	NG16	NG25	NG32
Weight	[kg]	6.3	8.1	10.3	18.6	68.0
Mounting interface		DIN 24340 A10 ISO 4401 NFPA D05	DIN 24340 A10 ISO 4401 NFPA D05	DIN 24340 A16 ISO 4401 NFPA D07	DIN 24340 A25 ISO 4401 NFPA D08	DIN 24340 A32 ISO 4401 NFPA D10
		CETOP RP 121-H				
Mounting position		unrestricted, preferably horizontal				
Ambient temperature	[°C]	-25...+60				
$MTTF_D$ value	[years]	75 / 150 (D3DWR)				
Hydraulic						
Max. operating pressure	[bar]	D3DWR: P, A B: 350; T: 210; option 9 [1] : P, A, B, T: 350; X, Y: 210 Pilot drain internal: P, A B, X: 350; T, Y: 105 Pilot drain external: P, A B, T, X: 350; Y: 105				
Fluid		Hydraulic oil according to DIN 51524				
Fluid temperature	[°C]	-20 ... +70 (NBR: -25...+70)				
Viscosity permitted	[cSt] / [mm²/s]	2.8...400				
Viscosity recommended	[cSt] / [mm²/s]	30...80				
Filtration		ISO 4406; 18/16/13				
Flow max.	[l/min]	150	170	300	700	2000
Leakage at 350 bar (per flow path) *depending on spool	[ml/min]	up to 20* (at 50 bar)	72...422*	up to 200*	up to 800*	up to 5000*
Minimum pilot supply pressure	[bar]	—	7	5		
Static / Dynamic						
Step response at 95 %	[ms]	Energized / de-energized				
DC solenoids at 65 l/min	175 bar	105 / 85	—	—	—	—
DC solenoids Pilot pressure	50 bar	—	50 / 60	95 / 65	150 / 170	470 / 390
	100 bar	—	50 / 60	75 / 65	110 / 170	320 / 390
	250 bar	—	50 / 50	60 / 65	90 / 170	210 / 390
	350 bar	—	50 / 50	60 / 65	85 / 170	200 / 390
Electrical characteristics						
Duty ratio		100 % ED; CAUTION: coil temperature up to 150 °C possible				
Protection class		IP65 in accordance with EN 60529 (with correctly mounted plug-in connector)				
		D3DWR		D31NWR / D41VW / D91VW / D111VW		
Supply voltage / ripple	[V]	24 V =		24 V =		
Tolerance supply voltage	[%]	±10		±10		
Current consumption hold	[A]	1.5		1.29		
Current consumption in rush	[A]	1.5		1.29		
Power consumption hold	[W]	36		31		
Power consumption in rush	[W]	36		31		
Solenoid connection		Connector as per EN 175301-803, solenoid identification as per ISO 9461.				
Wiring min.	[mm²]	3 x 1.5 recommended				
Wiring length max.	[m]	50 recommended				

Electrical characteristics hybrid option

Duty ratio		100 %		
Protection class		IP65 in accordance with EN 60529 (with correctly mounted plug-in connector)		
		D41	D91	D111
Supply voltage	[V]	24	24	24
Tolernace supply voltage	[%]	±10	±10	±10
Current consumption	[A]	1.21	0.96	1.29
Power consumption	[W]	29	23	31
Solenoid connection		Connector as per EN 175301-803		
Wiring min.	[mm²]	3 x 1.5 recommended		
Wiring length max.	[m]	50 recommended		

With electrical connections the protective conductor (PE ⏚) must be connected according to the relevant regulations.

[1] Bolts are not designed for simultaneous loading of all ports with maximum pressure.
The total pressure profile has to be adapted to the tensile strength of the bolts.

2

D3DWR

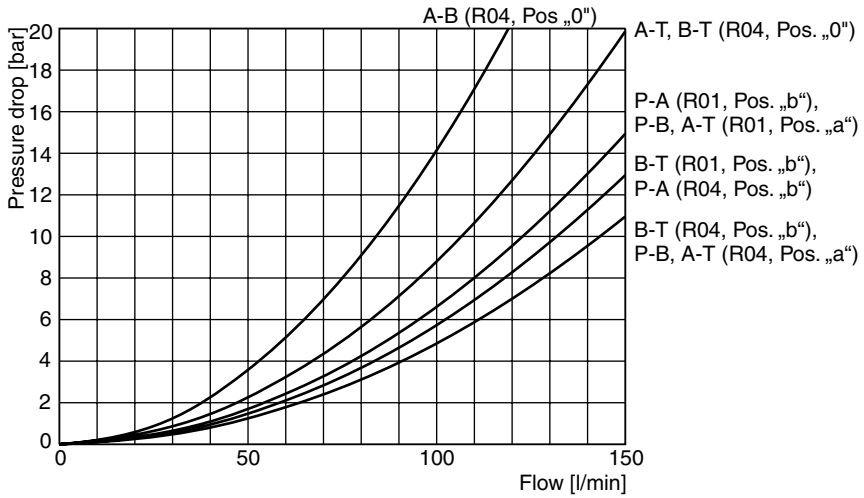

D31NWR

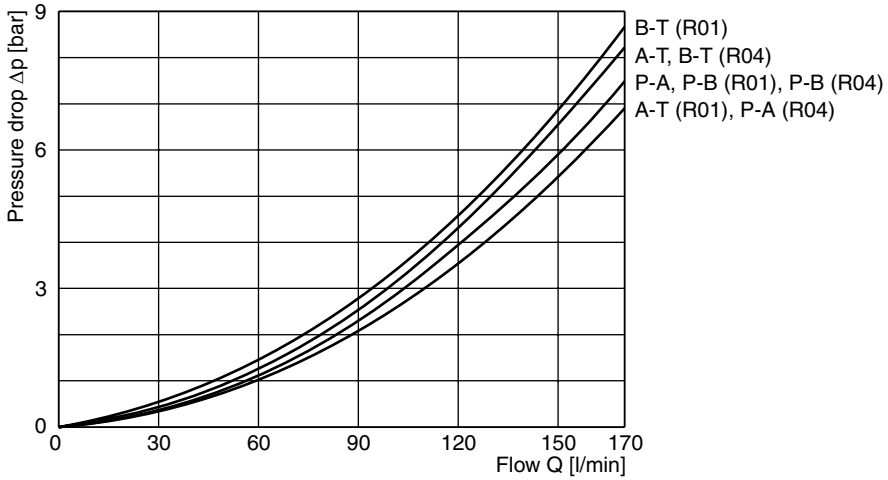

D41VW

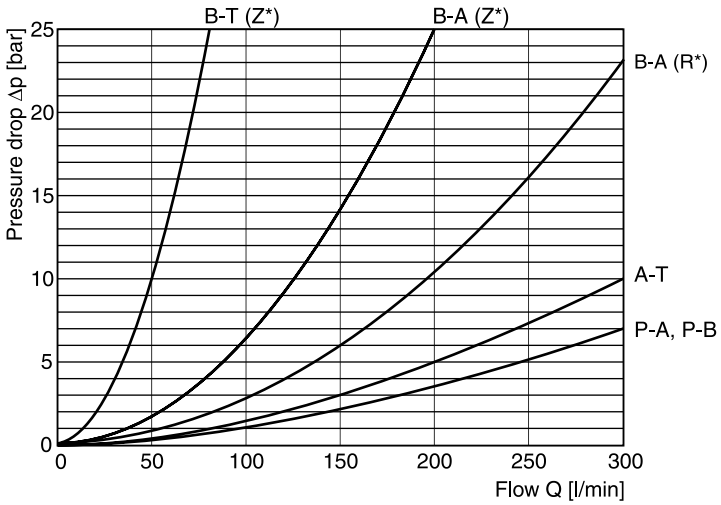

D91VW

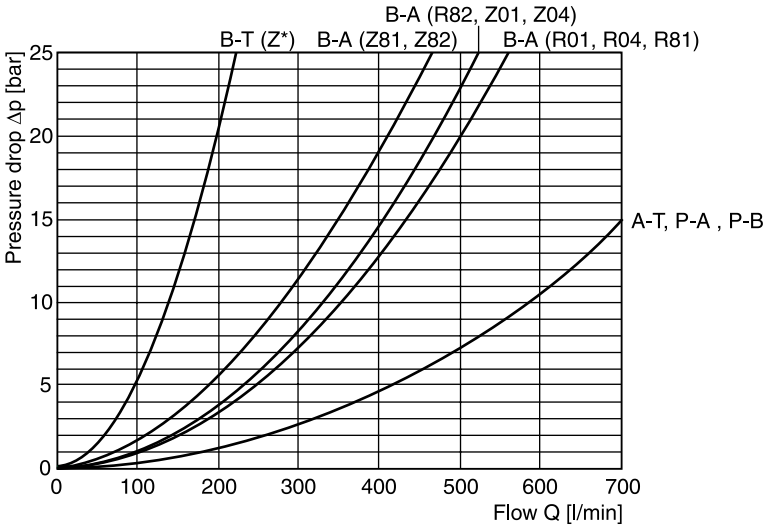

D111VW

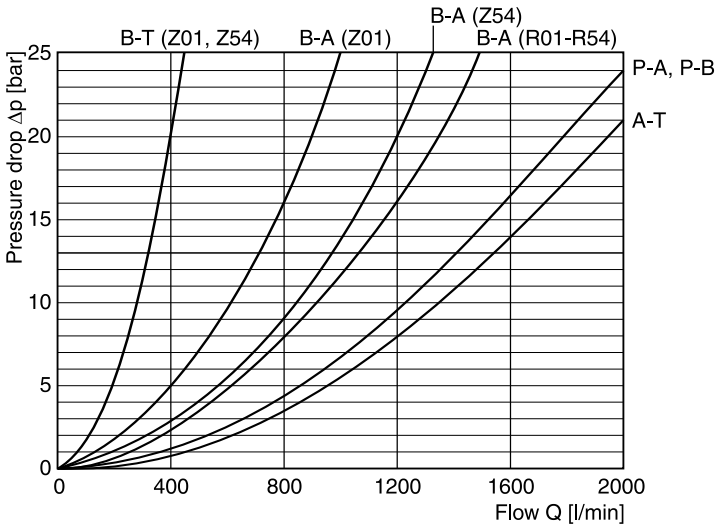

D31NW on request.

2

Pilot oil inlet (supply) and outlet (drain)

○ open, ● closed

Pilot oil Inlet	Drain	B	C
internal	external	○	●
external	external	●	●
internal	internal	○	○
external	internal	●	○

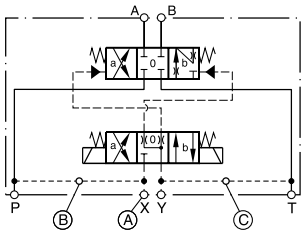

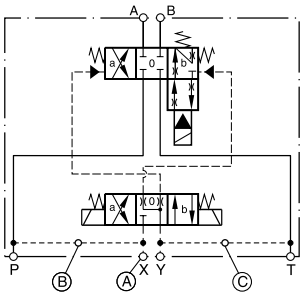

D31NWR

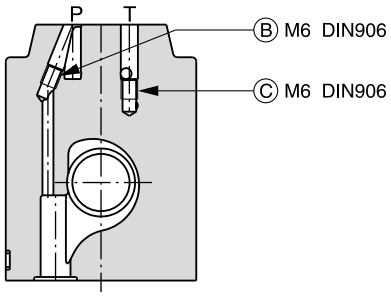

D41VWR

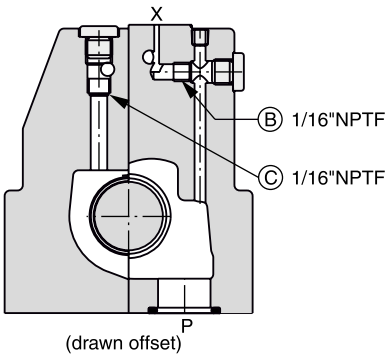

D41VWZ

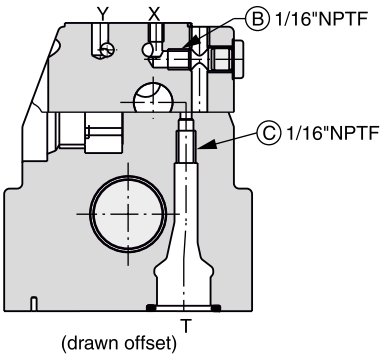

D91VWR

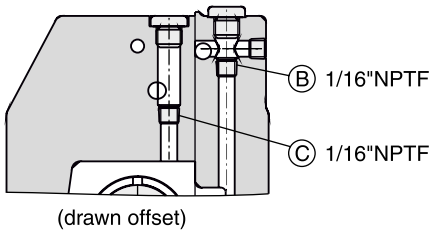

D91VWZ

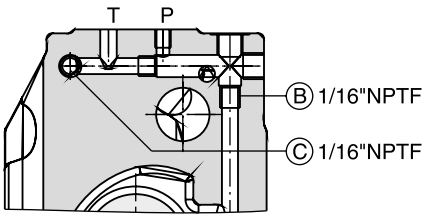

D111VWR

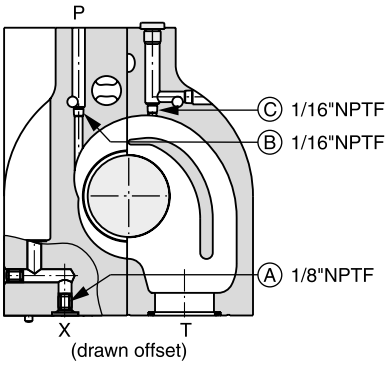

D111VWZ

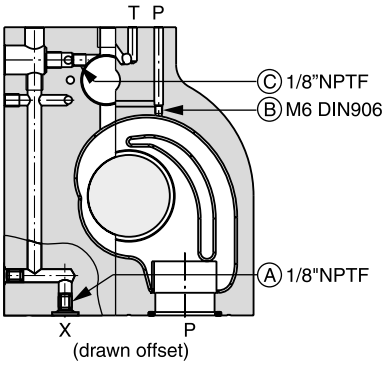

○ open, ● closed

Pilot oil Inlet	Outlet	A	B	C
internal	external	○	Orifice Ø1.5	●
external	external	Orifice Ø1.5	●	●
internal	internal	○	Orifice Ø1.5	○
external	internal	Orifice Ø1.5	●	○

D3DWR

Regenerative and hybrid function with additional plate ”H10-1666L / H10-1662 / A10-1664 / A10-1665L“, see chapter 12

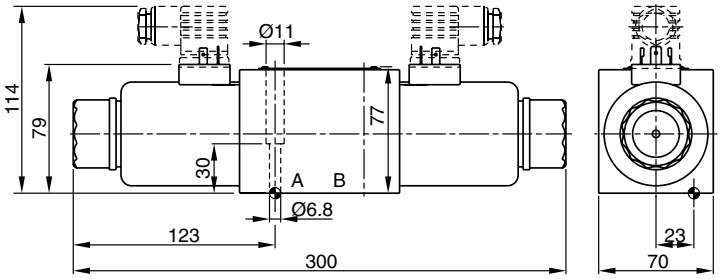

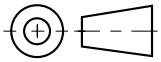

Surface finish	Kit			Kit
R_{max}6.3 0.01/100	BK385	4x M6x40 ISO 4762-12.9	13.2 Nm ±15 %	**NBR: SK-D3W-30** FPM: SK-D3W-V-30

The space necessary to remove the plug per EN 175301-803, design type AF is at least 15 mm.
The torque for the screw M3 of the plug has to be 0.5 to 0.6 Nm.

2

D31NWR

Regenerative and hybrid function with additional plate "H10-1666L / H10-1662 / A10-1664 / A10-1665L", see chapter 12

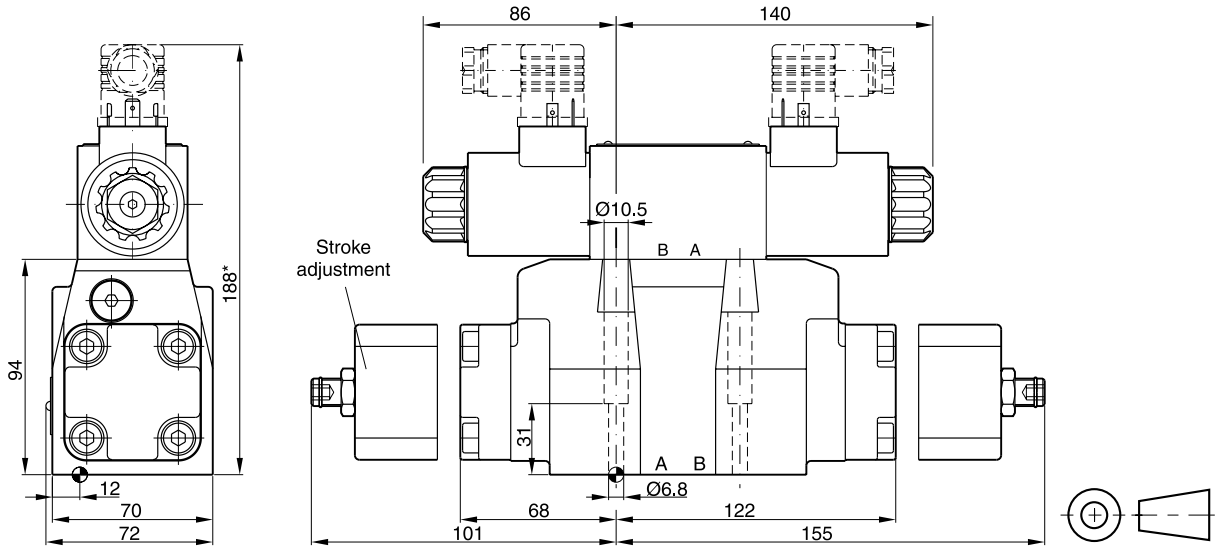

Surface finish	Kit			Kit
R_{max}6.3 / 0.01/100	BK385	4x M6x40 ISO 4762-12.9	13.2 Nm ±15 %	**NBR: SK-D31NW-N-91** FPM: SK-D31NW-V-91

D41VWR/Z

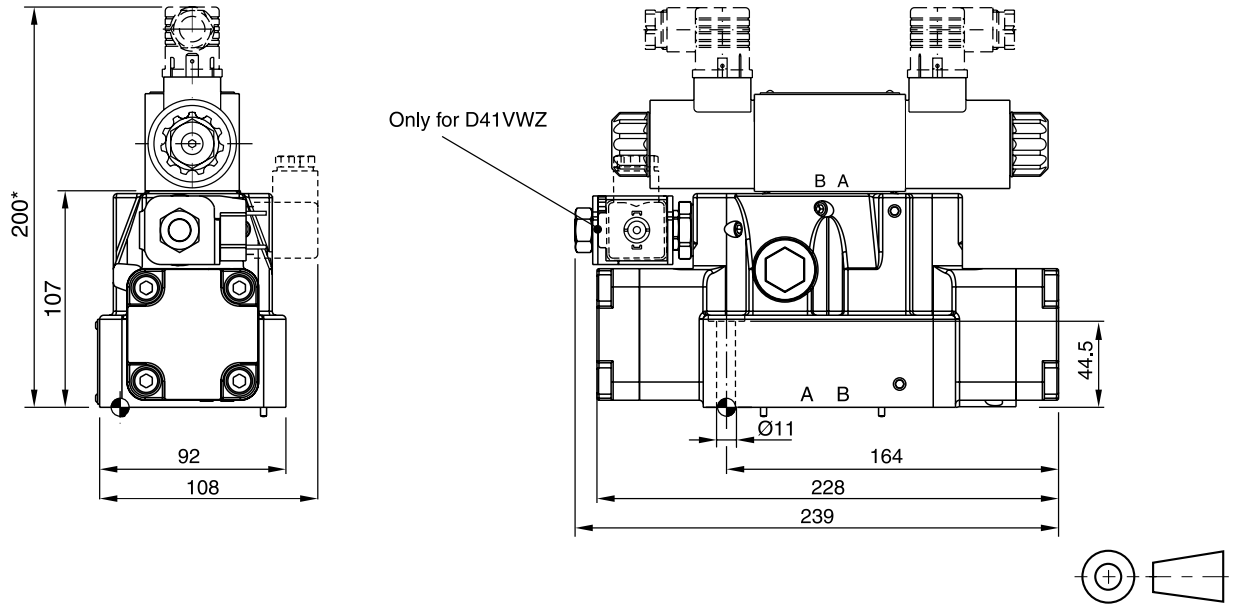

Surface finish	Kit			Kit
R_{max}6.3 / 0.01/100	BK320	4x M10x60 2x M6x55 ISO 4762-12.9	63 Nm ±15 % 13.2 Nm ±15 %	**NBR: SK-D41VW-N-91** FPM: SK-D41VW-V-91

The space necessary to remove the plug per EN 175301-803, design type AF is at least 15 mm.
The torque for the screw M3 of the plug has to be 0.5 to 0.6 Nm.

* Please add for each sandwich plate +40 mm (pressure reducing valve, choke valve meter-in/-out).

D91VWR/Z

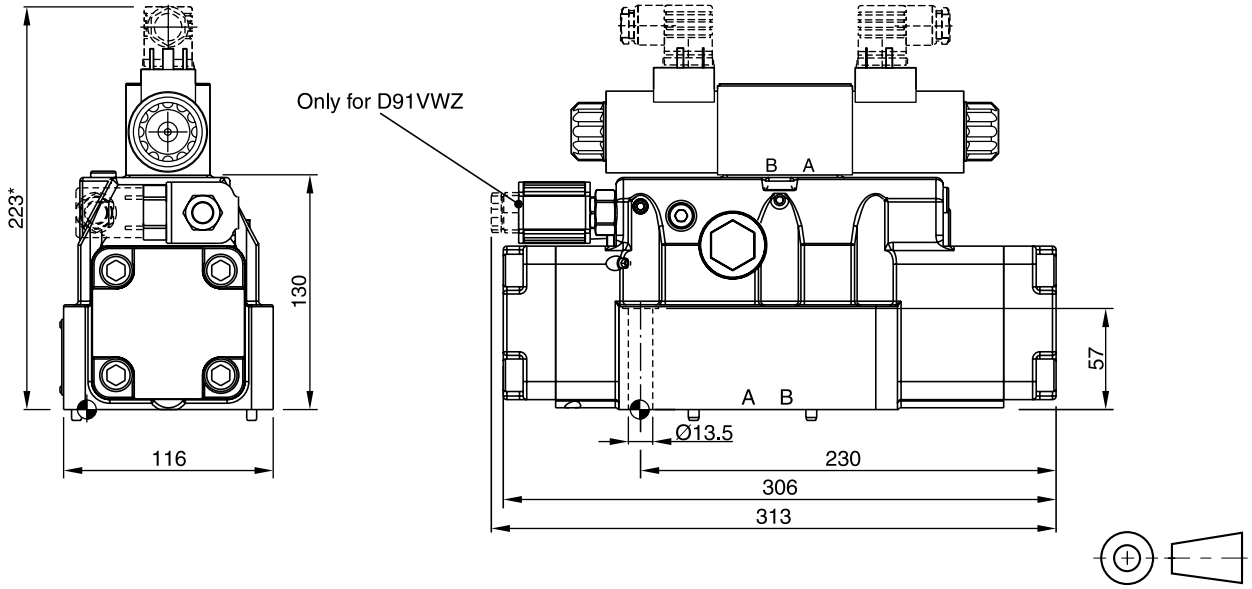

Surface finish	Kit			Kit
$R_{max}6.3$ 0.01/100	BK360	6x M12x75 ISO 4762-12.9	108 Nm ±15 %	**NBR: SK-D81VW-N-91 / SK-D91VW-N-91** FPM: SK-D81VW-V-91 / SK-D91VW-V-91

D111VW

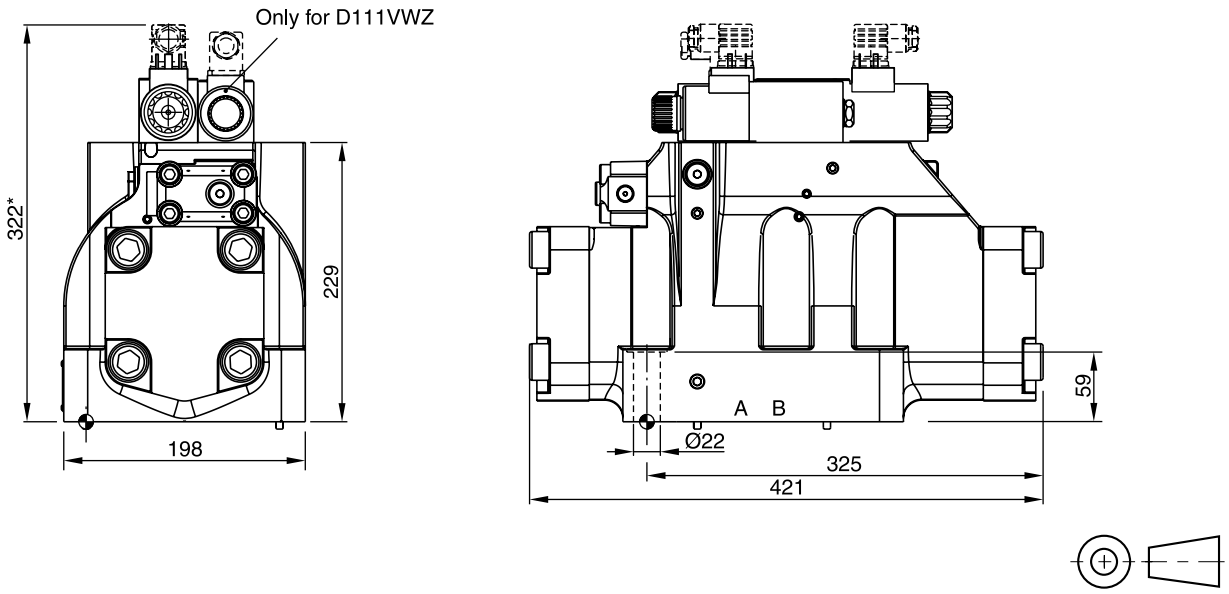

Surface finish	Kit			Kit
$R_{max}6.3$ 0.01/100	BK386	6x M20x90 ISO 4762-12.9	517 Nm ±15 %	**NBR: SK-D111VW-N-91** FPM: SK-D111VW-V-91

The space necessary to remove the plug per EN 175301-803, design type AF is at least 15 mm.
The torque for the screw M3 of the plug has to be 0.5 to 0.6 Nm.

* Please add for each sandwich plate +40 mm (pressure reducing valve, choke valve meter-in/-out).

Hydraulically operated directional control valves are available in 5 sizes:

D1VP*4L NG06 – operated via end caps
D1VP*90 NG06 – operated via end caps and mounting interface (X, Y)
D3DP NG10 – operated via mounting interface (X, Y)
D4P NG16 – operated via mounting interface (X, Y)
D9P NG25 – operated via mounting interface (X, Y)
D11P NG32 – operated via mounting interface (X, Y)

Size NG06 (D1VP) is available in two different designs:

- D1VP*4L for operating pressure >10 bar (over tank pressure) with control ports in the end caps.
- D1VP*90 for operating pressure >15 bar with control ports in the end caps and mounting interface (X, Y).

All other series are operated only via mounting interface (X, Y).

The shifting time is depending on the pilot pressure. For safe operation the minimum pilot pressure has to be ensured in all operating conditions. The maximum pilot pressure varies from the maximum operating pressure in some sizes.



D1VP*B*4L



D1VP*90

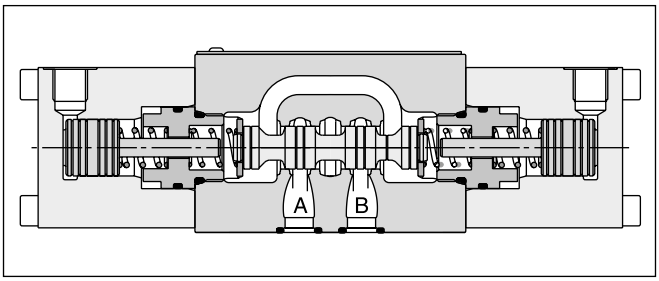

D1VP*C*4L

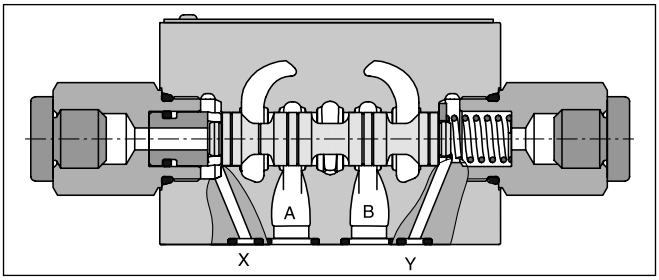

D1VP*90

Technical data

General							
Design		Directional spool valve					
Actuation		Hydraulic					
Series		**D1VP*4L**	**D1VP*90**	**D3DP**	**D4P**	**D9P**	**D11P**
Size		NG06	NG06	NG10	NG16	NG25	NG32
Weight	[kg]	1.3	1.3	3.7	9.0	17.0	66.0
Mounting interface		DIN 24340 A06 ISO 4401 NFPA D03	DIN 24340 A06 ISO 4401 NFPA D03	DIN 24340 A10 ISO 4401 NFPA D05	DIN 24340 A16 ISO 4401 NFPA D07	DIN 24340 A25 ISO 4401 NFPA D08	DIN 24340 A32 ISO 4401 NFPA D10
		CETOP RP 121-H					
Mounting position		unrestricted, preferably horizontal					
Ambient temperature	[°C]	-25...+60					
$MTTF_D$ value	[years]	150					
Hydraulic							
Max. operating pressure	[bar]	P, A B: 350; T: 140	P, A B; T: 350; X, Y: 210	P, A B, T: 350; X, Y: 210	P, A B, T: 350; X, Y: 350	P, A B, T: 350; X, Y: 350	P, A B, T: 350; X, Y: 350
Fluid		Hydraulic oil according to DIN 51524					
Fluid temperature	[°C]	-20 ... +70 (NBR: -25...+70)					
Viscosity permitted	[cSt] / [mm²/s]	2.8...400					
Viscosity recommended	[cSt] / [mm²/s]	30...80					
Filtration		ISO 4406 (1999); 18/16/13					
Flow max.	[l/min]	60 [1]	60 [1]	130	300	700	2000
Leakage at 350 bar (per flow path)	[ml/min]	up to 60 [2]	up to 60 [2]	up to 100 [2]	up to 200 [2]	up to 800 [2]	up to 5000 [2]
Operating pressure (min/max)	[bar]	10 [3] / 210	15 / 210	15 / 210	5 / 350	5 / 350	5 / 350
Pilot volume (start position to end position)	[cm³]	0.59	0.34	1.1	4.2	12.3	59.7
Static / Dynamic							
Step response		The response times depend on the pilot oil pressure and on the speed of the increase / decrease of the pilot pressure.					

[1] Depending on spool, see shift limits. [2] Depending on spool. [3] > tank pressure.

2

D	1	V	P					
Directional control valve	**Size DIN NG06 CETOP 03 NFPA D03**	**3-chamber design**	**Hydraulically operated**	**Spool type**	**Spool position**	**Seals**	**Pilot port**	**Design series** (not required for ordering)

3 position spools	
Code	Spool type
	a 0 b
001	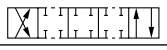
002	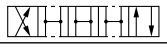
004	
006	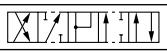
008 [1]	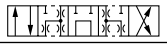
009 [1]	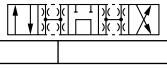

2 position spools	
Code	Spool type
	a b
020	
026	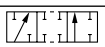
030	

Code	Pilot port
4L	High tank pressure, indirect via pilot spool
90	Direct via X, Y port or pipe thread G¼

Code	Seals
N	NBR
V	FPM

3 position spools [2]			
Code	Spool position		
C	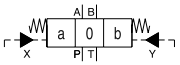		3 positions. Spring offset in position “0“. Operated in position “a“ or “b“.
	Standard	Spool type 008 and 009	
E	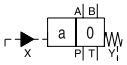 Operated in position “a“.	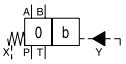 Operated in position “b“.	2 positions. Spring offset in position “0“.
F	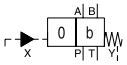 Spring offset in position “b“.	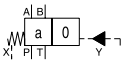 Spring offset in position “a“.	2 positions. Operated in position “0“.
K	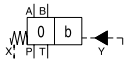 Operated in position “b“.	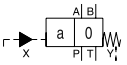 Operated in position “a“.	2 positions. Spring offset in position “0“.
M	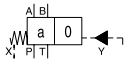 Spring offset in position “a“.	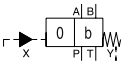 Spring offset in position “b“.	2 positions. Operated in position “0“.

2 position spools [2]		
Code	Spool position	
B	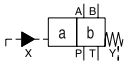	Spring offset in position “b“. Operated in position “a“.
D	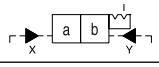	Detent, operated in position “a“ or “b“. No centre or offset position.
H	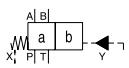	Spring offset in position “a“. Operated in position “b“.

[1] Consider specific spool position.
[2] Code 4L without ports X and Y.

Further spool types and styles on request.

D	3	D	P			2		
Directional control valve	**Size DIN NG10 CETOP 05 NFPA D05**	**5-chamber design**	**Hydraulically operated**	**Spool type**	**Spool position**	**Pilot oil supply and drain external/ external**	**Seals**	**Design series** (not required for ordering)

Code	Seals
N	NBR
V	FPM

3 position spools	
Code	Spool type a 0 b
001	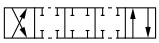
002	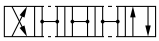
003	
004	
005	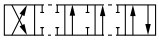
006	
007	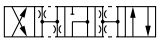
008 [1]	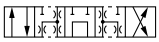
009 [1]	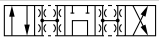
010	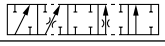
011	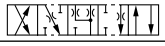
014	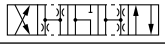
015	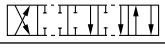
016	
021	
022	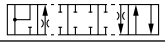
031	
032	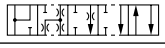
081	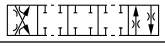
082	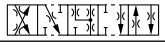
102	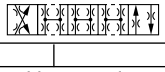

2 position spools	
Code	Spool type a b
020	
026	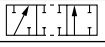
030	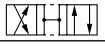
101	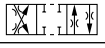

3 position spools			
Code	Spool position		
C			3 positions. Spring offset in position “0“. Operated in position “a“ or “b“.
	Standard	Spool type 008 and 009	
E	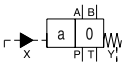 Operated in position “a“.	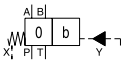 Operated in position “b“.	2 positions. Spring offset in position “0“.
F	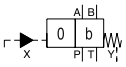 Spring offset in position “b“.	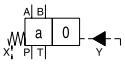 Spring offset in position “a“.	2 positions. Operated in position “0“.
K	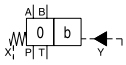 Operated in position “b“.	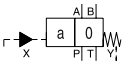 Operated in position “a“.	2 positions. Spring offset in position “0“.
M	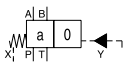 Spring offset in position “a“.	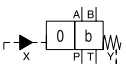 Spring offset in position “b“.	2 positions. Operated in position “0“.

2 position spools		
Code	Spool position	
B	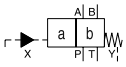	Spring offset in position “b“. Operated in position “a“.
D	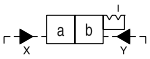	Detent, operated in position “a“ or “b“. No center or offset position.
H	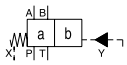	Spring offset in position “a“. Operated in position “b“.

[1] Consider specific spool position.

Further spool types and styles on request.

2

D		P		
Directional control valve	**Size**	**Hydraulically operated**	**Spool type**	**Spool position**

Code	Bore	Size
4	Ø20 mm	NG16
9	Ø32 mm	NG25
11	Ø50 mm	NG32

3 position spools		D4	D9	D11
Code	Spool type a 0 b			
001	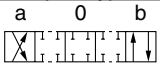	•	•	•
002		•	•	•
003		•	•	
004		•	•	•
005		•	•	
006	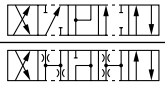	•	•	
007	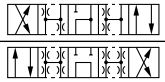	•	•	
009 [1]	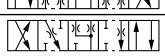	•	•	•
011	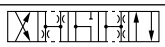	•	•	
014	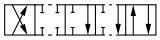	•	•	
015		•	•	
016	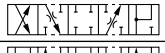	•	•	
021	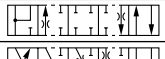	•	•	
022	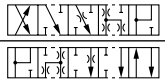	•	•	
031			•	
032	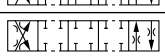		•	
054	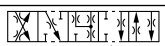	•	•	•
081	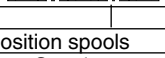	•	•	•
082	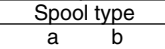	•	•	•

2 position spools		D4	D9	D11
Code	Spool type a b			
020		•	•	•
026	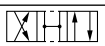	•	•	
030		•	•	•

3 position spools			
Code	Spool position		
C	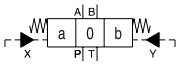		3 positions. Spring offset in position “0“. Operated in position “a“ or “b“.
	Standard	Spool type 009	
E	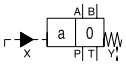 Operated in position “a“.	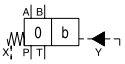 Operated in position “b“.	2 positions. Spring offset in position “0“.
F	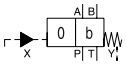 Spring offset in position “b“.	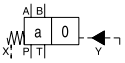 Spring offset in position “a“.	2 positions. Operated in position “0“.
K	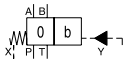 Operated in position “b“.	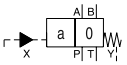 Operated in position “a“.	2 positions. Spring offset in position “0“.
M	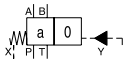 Spring offset in position “a“.	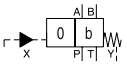 Spring offset in position “b“.	2 positions. Operated in position “0“.
R [2]	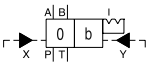 No centre in offset position.	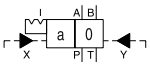 No centre in offset position.	2 positions detent. Operated in position “0“ or “b“.
S [2]	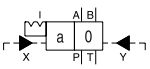 No centre in offset position.	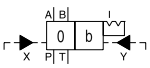 No centre in offset position.	2 positions detent. Operated in position “0“ or “a“. No center in offset position.

2 position spools		
Code	Spool position	
B	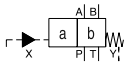	Spring offset in position “b“. Operated in position “a“.
D	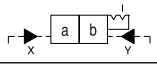	Detent, operated in position “a“ or “b“. No centre or offset position.
H	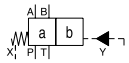	Spring offset in position “a“. Operated in position “b“.

[1] Consider specific spool position.

[2] Only D4 and D9 available.

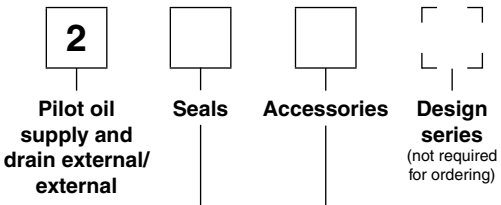

Code	Accessories
omit	Standard valve w/o accessories
3A	Pilot choke, meter-out
3B	Pilot choke, meter-in
3D [2)]	Stroke adjustment side B
3E [2)]	Stroke adjustment side A
3F [2)]	Stroke adjustment side A and B

Code	Seals
N	NBR
V	FPM

Further spool types, styles and position control on request.

2

The flow curve diagram shows the flow versus pressure drop curves for all spool types. The relevant curve number for each spool type, operating position and flow direction is given in the table below.

	Position „b“		Position „a“		Position „0“				
Spool	**P->A**	**B->T**	**P->B**	**A->T**	**P->A**	**P->B**	**A->T**	**B->T**	**P->T**
001	2	2	2	2	–	–	–	–	–
002	1	4	1	4	1	1	5	5	2
004	2	3	2	3	–	–	7	7	–
006	1	4	1	4	7	7	–	–	–
020	4	4	2	3	–	–	–	–	–
026	4	–	4	–	–	–	–	–	–
030	2	3	1	2	–	–	–	–	–
	P->B	A->T	P->A	B->T	P->A	P->B	A->T	B->T	P->T
008	4	5	4	5	–	–	–	–	8
009	5	5	6	7	–	–	–	–	7

Flow curves

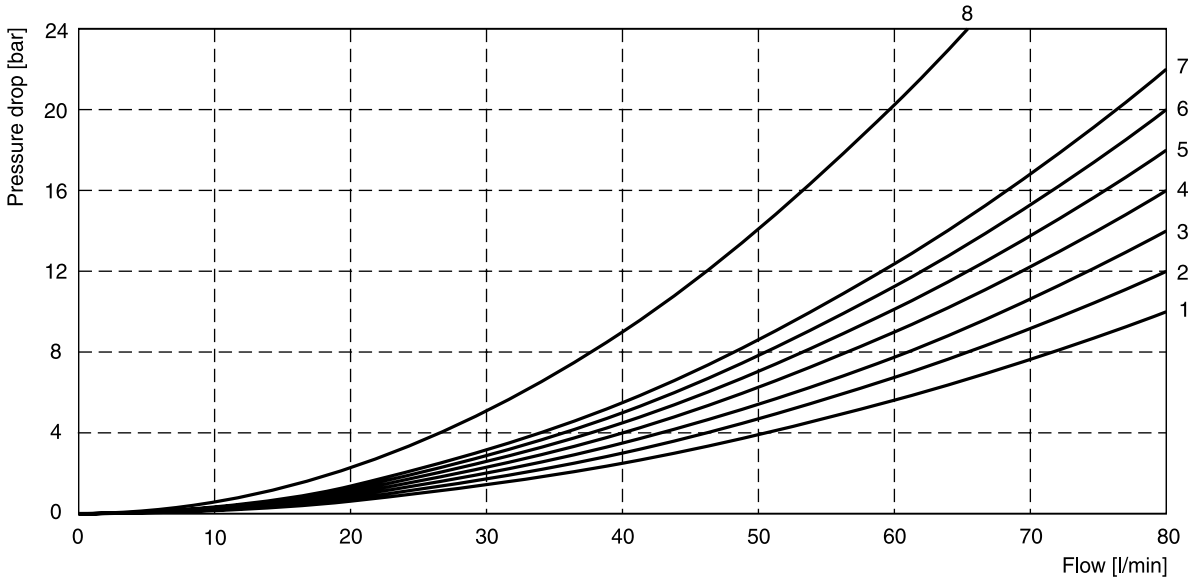

All characteristic curves measured with HLP46 at 50°C.

Shift limits

Spool	Shift limit [l/min]
001	60
002	
004	
006	
020	
030	
008	40
009	
026	20

The flow curve diagram shows the flow versus pressure drop curves for all spool types. The relevant curve number for each spool type, operating position and flow direction is given in the table below.

	Position „b“		Position „a“		Position „0“					
Spool	P-A	B-T	P-B	A-T	P-A	P-B	A-T	B-T	P-T	A-B
001	4	3	4	3	–	–	–	–	–	–
002	2	4	3	3	2	2	1	2	3	4
003	2	2	4	1	–	–	5	–	–	–
004	4	3	3	2	–	–	5	5	–	6
005	1	3	4	2	4	–	–	–	–	–
006	2	4	3	3	5	5	–	–	–	6
007	4	2	2	2	–	2	–	2	5	–
010	2	–	2	–	–	–	–	–	–	–
011	3	3	2	3	–	–	10	10	–	11
014	2	3	4	2	2	–	2	–	5	–
015	4	2	2	2	–	–	–	4	–	–
016	4	2	1	1	–	4	–	–	–	–
020	4	4	4	4	–	–	–	–	–	–
026	3	–	3	–	–	–	–	–	–	–
030	4	3	3	3	–	–	–	–	–	–
081	6	7	6	7	–	–	–	–	–	–
082	7	7	6	5	–	–	11	11	–	11
101	9	9	9	9	–	–	–	–	–	–
102	2	2	2	1	6	6	3	5	6	6
	P-B	A-T	P-A	B-T	P-A	P-B	A-T	B-T	P-T	A-B
008	4	2	5	6					8	
009	2	5	2	6	–	–	–	–	8	–

	Position „b“			Position „a“			Position „0“	
	P-A	B-T	A-B	P-B	A-T		A-T	
021	3	5	6	4	2	–	–	–
031	3	5	6	4	1	–	9	–
	P-A	B-T		P-A	P-B	A-B		B-T
022	5	4	–	5	2	6	–	–
032	5	2	–	5	2	6	–	9

Flow curves

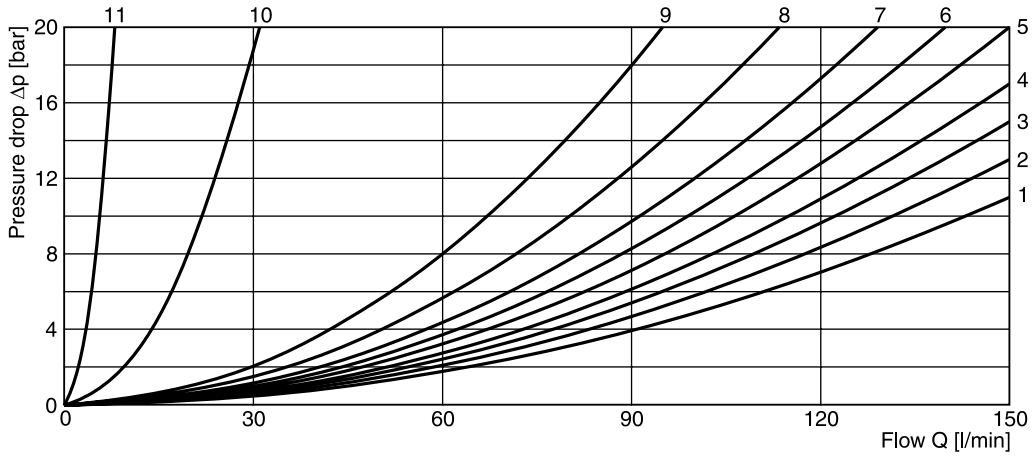

All characteristic curves measured with HLP46 at 50°C.

2

The flow curve diagram shows the flow versus pressure drop curves for all spool types. The relevant curve number for each spool type, operating position and flow direction is given in the table below.

D4P

Spool Code	Curve number				
	P-A	P-B	P-T	A-T	B-T
001	1	1	–	4	5
002	1	2	6	4	6
003	1	2	–	5	6
004	1	1	–	5	5
005	2	2	–	3	5
006	1	2	–	3	6
007	1	1	6	4	5
009	2	9	8	7	10
011	1	1	–	4	5
014	1	1	6	4	5
015	1	2	–	4	6
016	2	2	–	3	5
020	3	5	–	3	5
021	2	8	–	2	–
022	8	2	–	–	3
026	3	5	–	–	–
030	2	3	–	6	7
054	2	3	–	6	7

D4P

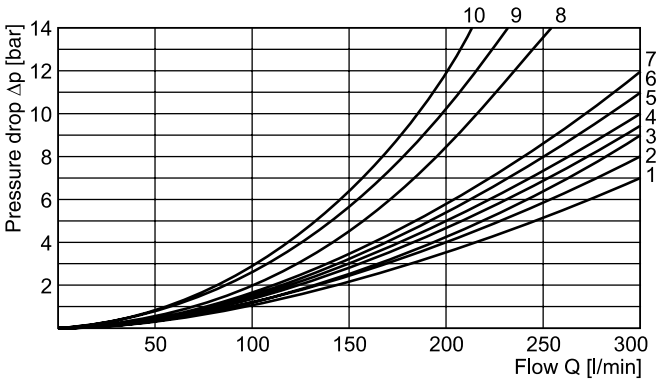

D9P and D11P

Spool Code	Curve number									
	P-A		P-B		P-T		A-T		B-T	
	D9	D11	D9	D11	D9	D11	D9	D11	D9	D11
001	3	5	2	5	–	–	3	4	5	1
002	2	5	1	5	1	5	3	4	5	1
003	4	–	2	–	–	–	3	–	6	–
004	4	5	3	5	–	–	3	4	5	1
005	1	–	2	–	–	–	4	–	5	–
006	2	–	2	–	–	–	4	–	6	–
007	3	–	1	–	7	–	3	–	5	–
009	4	3	8	3	9	2	4	3	10	1
011	3	–	2	–	–	–	3	–	5	–
014	1	–	2	–	8	–	3	–	5	–
015	3	–	3	–	–	–	4	–	5	–
016	3	–	3	–	–	–	4	–	5	–
020	6	5	5	5	–	–	6	3	8	1
021	5	–	10	–	–	–	3	–	–	–
022	10	–	5	–	–	–	–	–	5	–
026	6	–	5	–	–	–	–	–	–	–
030	3	5	2	5	–	–	3	4	5	1
054	–	5	–	5	–	–	–	4	–	1

D9P

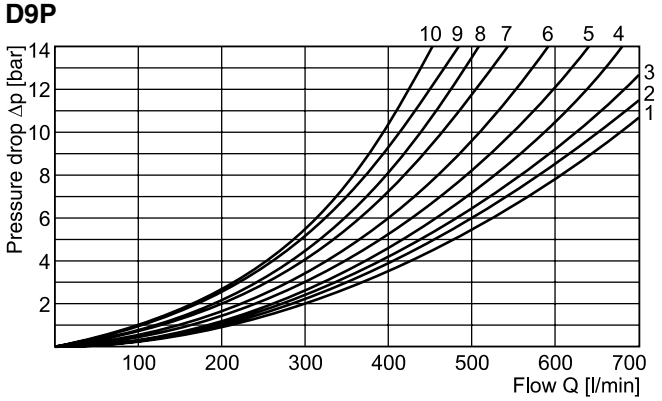

D11P

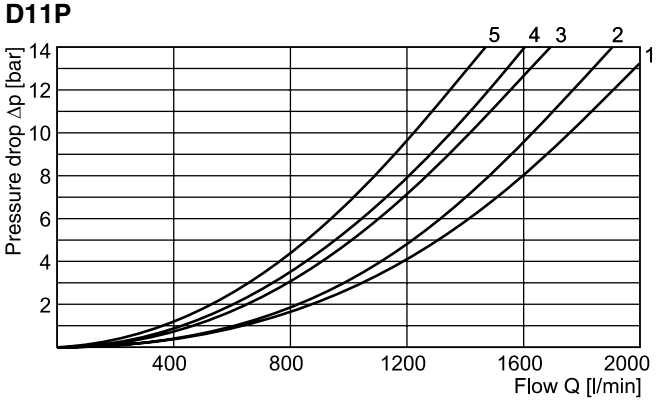

All characteristic curves measured with HLP46 at 50°C.

2

D1VP*90

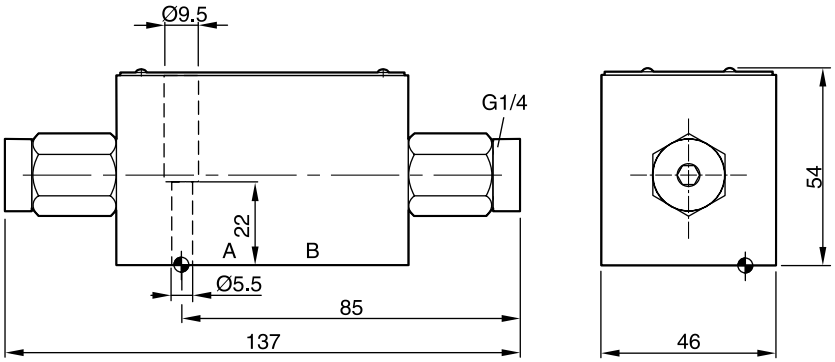

Surface finish	Kit			Kit
R_{max}6.3 0.01/100	BK375	4x M5x30 ISO 4762-12.9	7.6 Nm ±15 %	**NBR: SK-D1VP-N-87** FPM: SK-D1VP-V-87

D1VP*4L

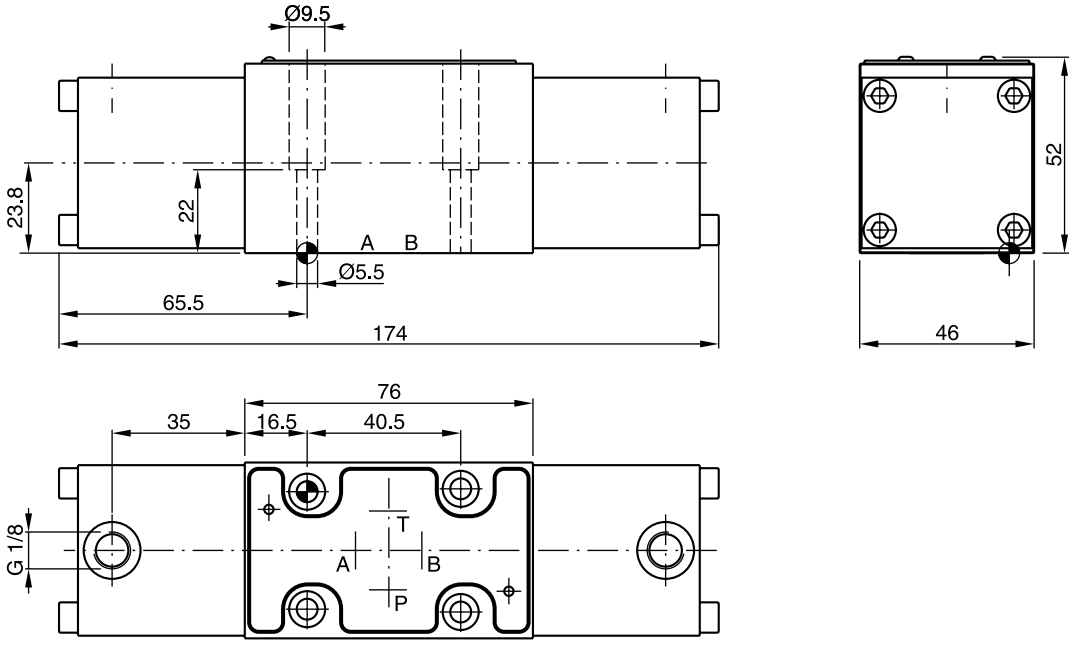

Surface finish	Kit			Kit
R_{max}6.3 0.01/100	BK375	4x M5x30 ISO 4762-12.9	7.6 Nm ±15 %	**NBR: SK-D1VP-N4-91** FPM: SK-D1VP-V4-91

2

D3DP

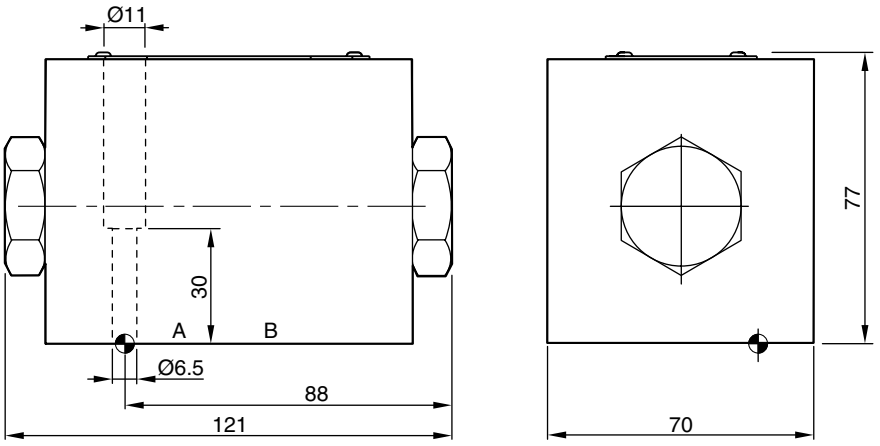

Surface finish	Kit			Kit
$R_{max}6.3$ 0.01/100	BK385	4x M6x40 ISO 4762-12.9	13.2 Nm ±15 %	**NBR: SK-D3DP-N-42** FPM: SK-D3DP-V-42

D4P

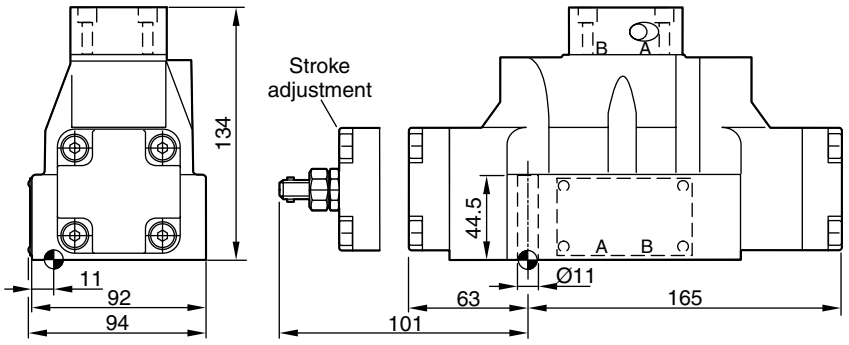

Surface finish	Kit			Kit
$R_{max}6.3$ 0.01/100	BK320	4x M10x60 2 x M6x55 ISO 4762-12.9	63 Nm ±15 % 13.2 Nm ±15 %	**NBR: SK-D41VW-N-91** FPM: SK-D41VW-V-91

D9P

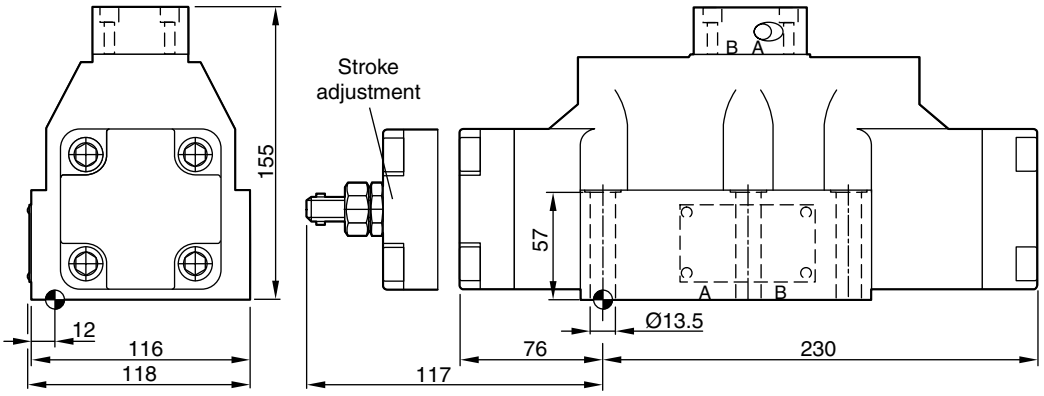

Surface finish	Kit			Kit
$R_{max}6.3$ 0.01/100	BK360	6x M12x75 ISO 4762-12.9	108 Nm ±15 %	**NBR: SK-D91VW-N-91** FPM: SK-D91VW-V-91

D11P

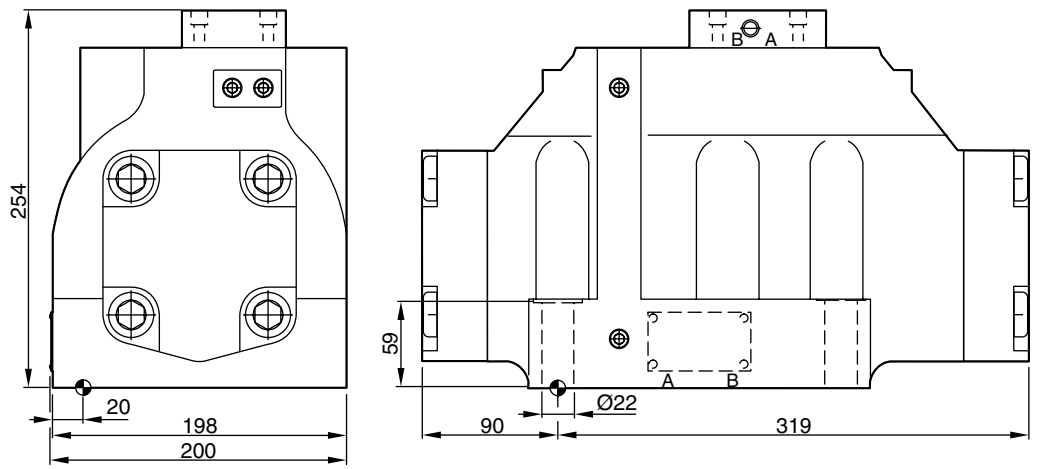

Surface finish	Kit			Kit
$R_{max}6.3$ 0.01/100	BK386	6x M20x90 ISO 4762-12.9	517 Nm ±15 %	**NBR: SK-D111VW-N-91** FPM: SK-D111VW-V-91

2

Pneumatically controlled directional control valves of series D1VA are based on the standard D1VW design.

The main spool is operated via an auxiliary spool of larger diameter. Thus enables low operating pressures from 3 to 5 bar.

Pneumatic connection via thread G1/8 in the end caps.



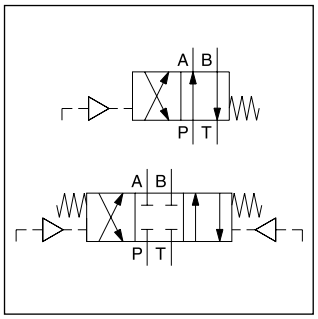

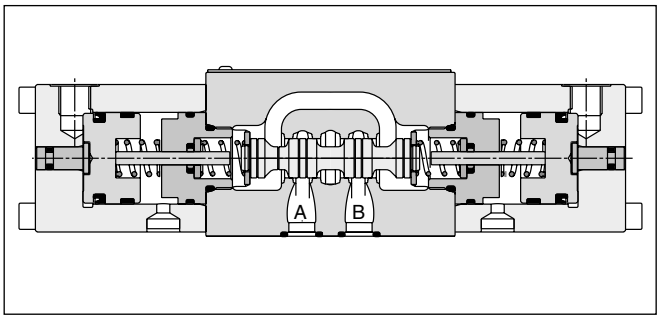

Technical data

General		
Design		Directional spool valve
Actuation		Pneumatic
Size		DIN NG06 / CETOP 03 / NFPA D03
Mounting interface		DIN 24340 A06, ISO 4401, NFPA D03, CETOP RP 121-H
Mounting position		unrestricted, preferably horizontal
Ambient temperature	[°C]	-25...+60
$MTTF_D$ value	[years]	150
Weight	[kg]	1.3
Hydraulic		
Max. operating pressure	[bar]	P, A B: 350; T: 105
Fluid		Hydrauliköl nach DIN 51524
Fluid temperature	[°C]	-20 ... +70 (NBR: -25...+70)
Viscosity permitted	[cSt] / [mm²/s]	2.8...400
Viscosity recommended	[cSt] / [mm²/s]	30...80
Filtration		ISO 4406 (1999); 18/16/13
Flow max.	[l/min]	60 [1)]
Leakage at 350 bar (per flow path)	[ml/min]	up to 60 [1)]
Operating pressure w/o tank pressure with max tank	[bar] [bar]	min. 3 min. 5
Static / Dynamic		
Step response		The response times depend on the pilot oil pressure and on the speed of the increase / decrease of the pilot pressure.
Recommended values are (act./deact.) depending on pilot pressure and pipe length	[ms]	13/28

[1)] Depending on spool.

D	1	V	A				4L	
Directional control valve	**Size DIN NG06 CETOP 03 NFPA D03**	**3-chamber design**	**Pneumatically operated**	**Spool type**	**Spool position**	**Seals**	**Indirect actuation via pilot spool; G1/8**	**Design series** (not required for ordering)

3 position spools	
Code	Spool type a 0 b
001	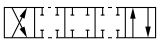
002	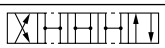
004	
006	
008 [1]	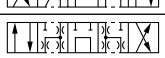
009 [1]	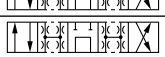

2 position spools	
Code	Spool type a b
020	
026	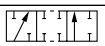
030	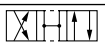

3 position spools			
Code	Spool position		
C	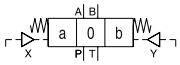		**3 positions. Spring offset in position “0“. Operated in position “a“ or “b“.**
	Standard	Spool type 008, 009	
E	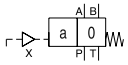 Operated in position “a“.	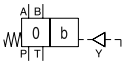 Operated in position “b“.	2 positions. Spring offset in position “0“.
F	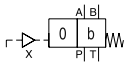 Spring offset in position “b“.	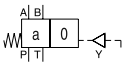 Spring offset in position “a“.	2 positions. Operated in position “0“.
K	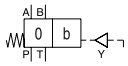 Operated in position “b“.	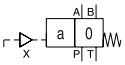 Operated in position “a“.	2 positions. Spring offset in position “0“.
M	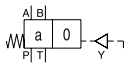 Spring offset in position “a“.	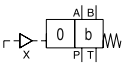 Spring offset in position “b“.	2 positions. Operated in position “0“.

2 position spools		
Code	Spool position	
B	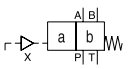	**Spring offset in position “b“. Operated in position “a“.**
D	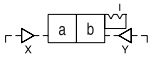	**Detent, operated in position “a“ or “b“. No centre or offset position.**
H	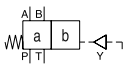	**Spring offset in position “a“. Operated in position “b“.**

Code	Seals
N	**NBR**
V	FPM

Bold letters =
Short-term availability

[1] Consider specific spool position.

Further spool types and styles on request.

2

The flow curve diagram shows the flow versus pressure drop curves for all spool types. The relevant curve number for each spool type, operating position and flow direction is given in the table below.

	Position „b“		Position „a“		Position „0“				
Spool	P->A	B->T	P->B	A->T	P->A	P->B	A->T	B->T	P->T
001	2	2	2	2	–	–	–	–	–
002	1	4	1	4	1	1	5	5	2
004	2	3	2	3	–	–	7	7	–
006	1	4	1	4	7	7	–	–	–
020	4	4	2	3	–	–	–	–	–
026	4	–	4	–	–	–	–	–	–
030	2	3	1	2	–	–	–	–	–
	P->B	A->T	P->A	B->T	P->A	P->B	A->T	B->T	P->T
008	4	5	4	5	–	–	–	–	8
009	5	5	6	7	–	–	–	–	7

Flow curves

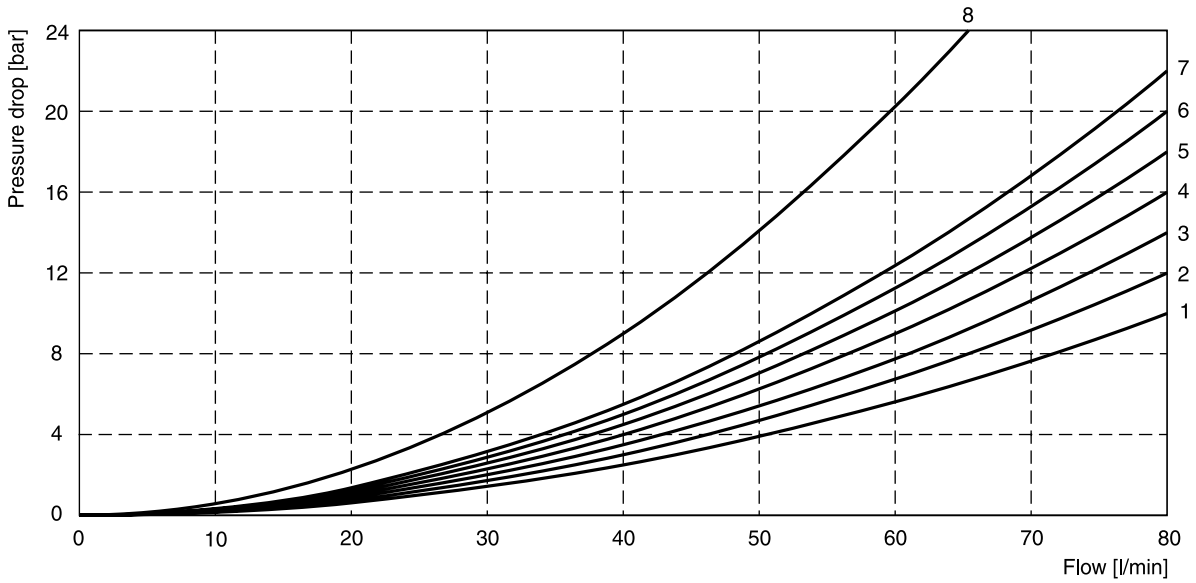

All characteristic curves measured with HLP46 at 50 °C.

Shift limits

Spool	Shift limit [l/min]
001 002 004 006 020 030	60
008 009	40
026	20

B, E, F -style

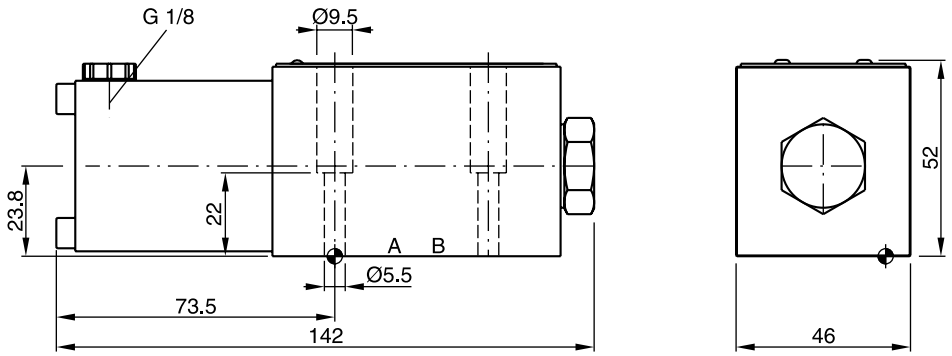

H, K, M -style

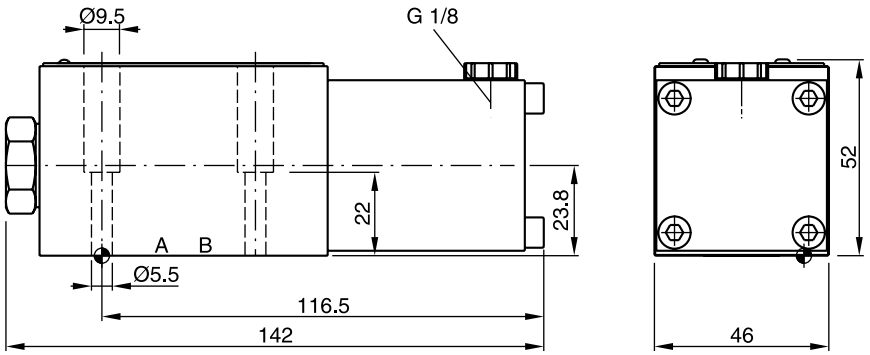

C, D -style

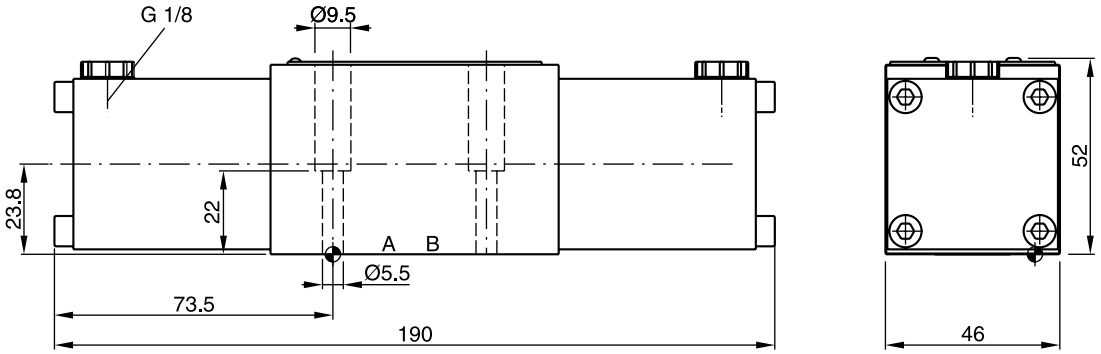

Surface finish	Kit			Kit
R_{max}6.3 ⏥ 0.01/100	BK375	4x M5x30 ISO 4762-12.9	7.6 Nm ±15 %	**NBR: SK-D1VA-N-91** FPM: SK-D1VA-V-91

The D1VL is a 3 chamber, D3DL, D4L and D9L are 5 chamber 4/3- or 4/2-way directional control valves.

The hand lever is directly connected to the spool and can be located either on the A or B side. Spring offset and detent designs are available.

Directional control valves with hand lever are available in 4 sizes:

- D1VL NG06
- D3DL NG10
- D4L NG16
- D9L NG25



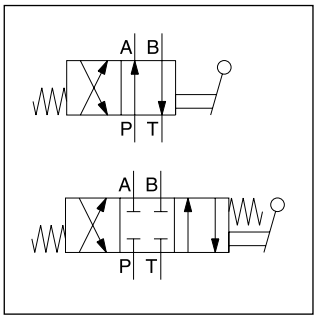

D1VL

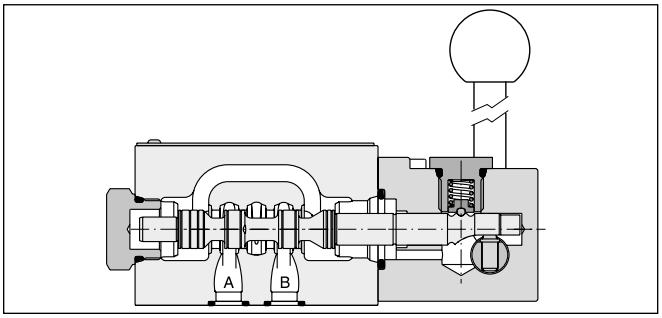

D1VL

Features

- All hand lever parts stainless steel

Technical data

General					
Design		Directional spool valve			
Actuation		Lever			
Series		**D1VL**	**D3DL**	**D4L**	**D9L**
Size		NG06	NG10	NG16	NG25
Weight	[kg]	1.4	3.7	9.0	17.0
Mounting interface		DIN 24340 A06 ISO 4401 NFPA D03	DIN 24340 A10 ISO 4401 NFPA D05	DIN 24340 A16 ISO 4401 NFPA D07	DIN 24340 A25 ISO 4401 NFPA D08
		CETOP RP 121-H			
Mounting position		unrestricted, preferably horizontal			
Ambient temperature	[°C]	-25...+60			
$MTTF_D$ value	[years]	150			
Hydraulic					
Max. operating pressure	[bar]	P, A B: 350; T: 140	P, A B: 350; T: 140	external drain P, A B, T: 350; X, Y: 140 internal drain P, A B: 350; T, X, Y: 140	external drain P, A B, T: 350; X, Y: 140 internal drain P, A B: 350; T, X, Y: 140
Fluid		Hydraulic oil according to DIN 51524			
Fluid temperature	[°C]	-20 ... +70 (NBR: -25...+70)			
Viscosity permitted	[cSt] / [mm²/s]	2.8...400			
Viscosity recommended	[cSt] / [mm²/s]	30...80			
Filtration		ISO 4406 (1999); 18/16/13			
Flow max.	[l/min]	80	130	300	700
Leakage at 350 bar (per flow path)	[ml/min]	–	up to 100 [1)]	up to 200 [1)]	up to 800 [1)]
Leakage at 50 bar (per flow path)	[ml/min]	up to 10 [1)]	–	–	–

[1)] Depending on spool.

D	1	V						
Directional control valve	**Size DIN NG06, CETOP 03 NFPA D03**	**3-chamber valve**	**Actuation**	**Spool type**	**Spool position**	**Seals**	**Switching logic**	**Design series** (not required for ordering)

2

Code	Actuation	
L	**Hand lever side B**	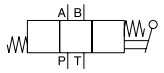
LB	**Hand lever side A**	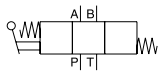

Code	Switching logic
4J [2]	**Center of rotation below spool axis (Parker style)**
4K [2]	**Center of rotation above spool axis (Denison style)**

Code	Seals
N	**NBR**
V	FPM

3 position spools

Code	Spool type (a 0 b)
001	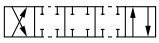
002	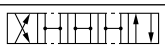
004	
006	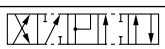
009 [1]	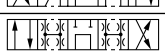
010 [2]	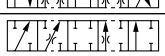
042 [3]	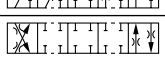

2 position spools

Code	Spool type (a b)
020	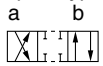

3 position spools

Code	Spool position		
C	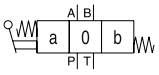		**3 positions. Spring offset in position “0“. Operated in position “a“ or “b“.**
	Standard	Spool type 009	
E	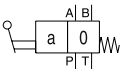 Operated in position “a“.	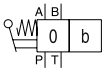 Operated in position “b“.	2 positions. Spring offset in position “0“.
K	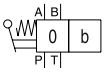 Operated in position “b“.	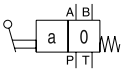 Operated in position “a“.	2 positions. Spring offset in position “0“.
N	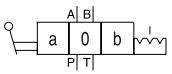 No centre in offset position.	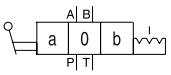 No centre in offset position.	3 positions, detent. Operated in position “a“, “0“or “b“.
R	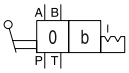 No centre in offset position.	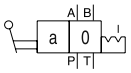 No centre in offset position.	2 positions, detent. Operated in position “0“ or “b“.
S	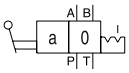 No centre in offset position.	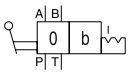 No centre in offset position.	2 positions, detent. Operated in position “0“ or “a“. No center in offset position.

2 position spools

Code	Spool position	
B	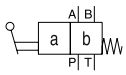	**Spring offset in position “b“. Operated in position “a“.**
D	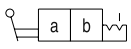	Detent, operated in position “a“ or “b“. No center or offset position.
H	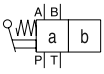	Spring offset in position “a“. Operated in position “b“.

[1] Consider specific spool position.
[2] Only for D3DL.
[3] Only for D1VL.

Bold letters =
Short-term availability

Further spool types on request.

2

D	3	D						
Directional control valve	**Size DIN NG10, CETOP 05 NFPA D05**	**5-chamber valve**	**Actuation**	**Spool type**	**Spool position**	**Seals**	**Switching logic**	**Design series** (not required for ordering)

Code	Actuation	
L	**Hand lever side B**	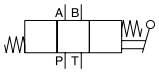
LB	**Hand lever side A**	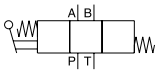

Code	Switching logic
4J [2]	**Center of rotation below spool axis (Parker style)**
4K [2]	**Center of rotation above spool axis (Denison style)**

Code	Seals
N	**NBR**
V	FPM

3 position spools	
Code	Spool type
	a 0 b
001	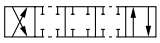
002	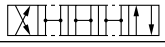
004	
006	
009 [1]	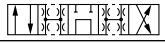
010	

2 position spools	
Code	Spool type
	a b
020	

3 position spools			
Code	Spool position		
C	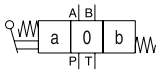		**3 positions. Spring offset in position “0“. Operated in position “a“ or “b“.**
	Standard	Spool type 009	
E	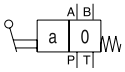 Operated in position “a“.	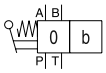 Operated in position “b“.	2 positions. Spring offset in position “0“.
K	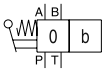 Operated in position “b“.	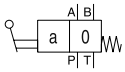 Operated in position “a“.	2 positions. Spring offset in position “0“.
N	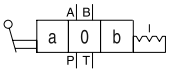 No centre in offset position.	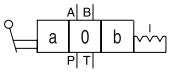 No centre in offset position.	3 positions, detent. Operated in position “a“, “0“or “b“.
R	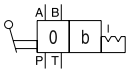 No centre in offset position.	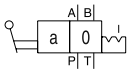 No centre in offset position.	2 positions, detent. Operated in position “0“ or “b“.
S	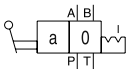 No centre in offset position.	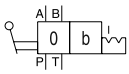 No centre in offset position.	2 positions, detent. Operated in position “0“ or “a“. No center in offset position.

2 position spools		
Code	Spool position	
B	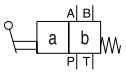	**Spring offset in position “b“. Operated in position “a“.**
D	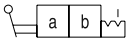	Detent, operated in position “a“ or “b“. No center or offset position.
H	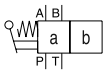	Spring offset in position “a“. Operated in position “b“.

[1] Consider specific spool position.
[2] Details see dimensions.

Bold letters =
Short-term availability

Further spool types on request.

2

D							
Directional control valve	**Size**	**Actuation**	**Spool type**	**Spool position**	**Pilot oil drain**	**Seals**	**Design series** (not required for ordering)

Code	Bore	Size
4	Ø20 mm	NG16
9	Ø32 mm	NG25

Code	Outlet
2 [2]	External
5 [3]	Internal

Code	Seals
N	NBR
V	FPM

Code	Actuation	
L	Hand lever side B	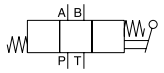
LB	Hand lever side A	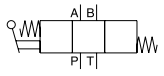

3 position spools		D4	D9
Code	Spool type a 0 b		
001	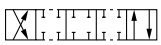	•	•
002	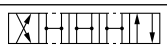	•	•
003		•	•
004		•	•
006		•	
007	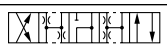	•	•
009 [1]	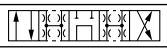	•	•
011	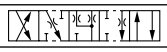	•	•
014	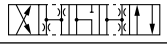	•	•
015	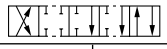	•	•

2 position spools			
Code	Spool type a b		
020		•	•
030		•	•

Code	3 position spools		
C	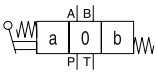		3 positions. Spring offset in position “0“. Operated in position “a“ or “b“.
	Standard	Spool type 009	
E	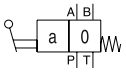 Operated in position “a“.	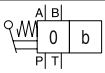 Operated in position “b“.	2 positions. Spring offset in position “0“.
F	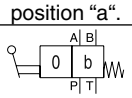 Operated in position “0“.	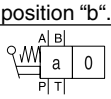 Operated in position “0“.	2 positions. Spring offset in position “b“.
K	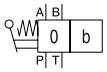 Operated in position “b“.	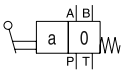 Operated in position “a“.	2 positions. Spring offset in position “0“.
M	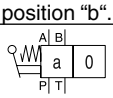 Operated in position “0“.	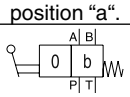 Operated in position “0“.	2 positions. Spring offset in position “a“.
N	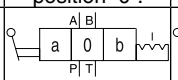 No centre in offset position.	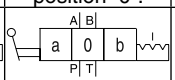 No centre in offset position.	3 positions, detent. Operated in position “a“, “0“ or “b“.
R	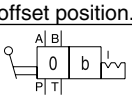 No centre in offset position.	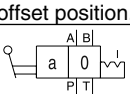 No centre in offset position.	2 positions, detent. Operated in position “0“ or “b“.
S	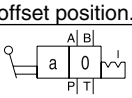 No centre in offset position.	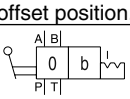 No centre in offset position.	2 positions, detent. Operated in position “0“ or “a“. No center in offset position.

Code	2 position spools	
B	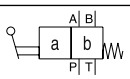	Spring offset in position “b“. Operated in position “a“.
D	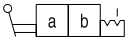	Detent, operated in position “a“ or “b“. No center or offset position.
H	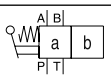	Spring offset in position “a“. Operated in position “b“.

[1] Consider specific spool position.
[2] Pressure T-port > 140 bar.
[3] Pressure T-port < 140 bar.

Further spool types on request.

2

The flow curve diagrams show the flow versus pressure drop curves for all spool types. The relevant curve number for each spool type, operating position and flow direction is given in the tables below.

D1VL

	Position „b“		Position „a“		Position „0“				
Spool	P->A	B->T	P->B	A->T	P->A	P->B	A->T	B->T	P->T
001	2	2	2	2	–	–	–	–	–
002	1	4	1	4	1	1	5	5	2
004	2	3	2	3	–	–	7	7	–
006	1	4	1	4	7	7	–	–	–
020	4	4	2	3	–	–	–	–	–
	P->B	A->T	P->A	B->T	P->A	P->B	A->T	B->T	P->T
009	5	5	6	7	–	–	–	–	7

Flow curve diagram D1VL

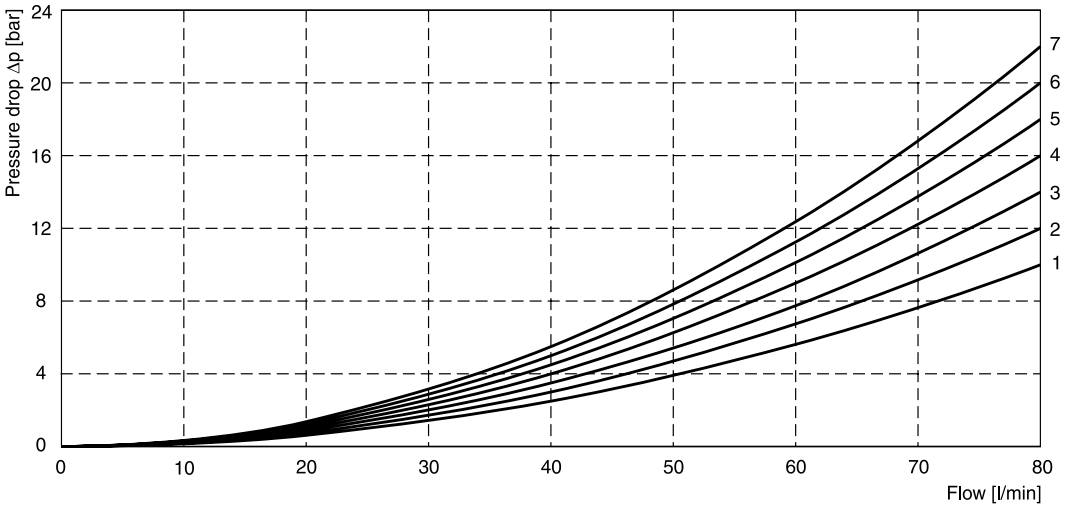

D3DL

	Position „b“		Position „a“		Position „0“					
Spool	P-A	B-T	P-B	A-T	P-A	P-B	A-T	B-T	P-T	A-B
001	4	3	4	3	–	–	–	–	–	–
002	2	4	3	3	2	2	1	2	3	4
004	4	3	3	2	–	–	5	5	–	6
006	2	4	3	3	5	5			–	6
020	4	4	4	4	–	–	–	–	–	–
	P-B	A-T	P-A	B-T	P-A	P-B	A-T	B-T	P-T	A-B
009	2	5	2	6	–	–	–	–	7	–

Flow curve diagram D3DL

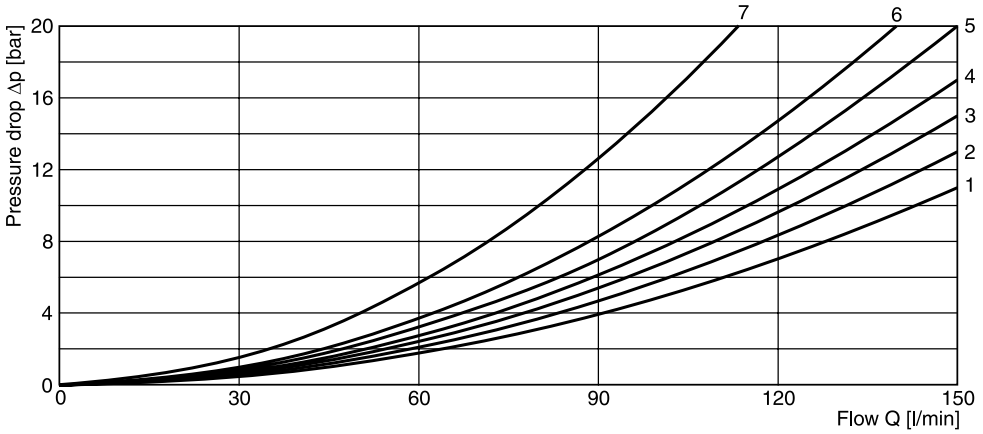

All characteristic curves measured with HLP46 at 50 °C.

The flow curve diagrams show the flow versus pressure drop curves for all spool types. The relevant curve number for each spool type, operating position and flow direction is given in the tables below.

D4L

	Curve number				
Spool	P-A	P-B	P-T	A-T	B-T
001	1	1	–	4	5
002	1	2	6	4	6
003	1	2	–	5	6
004	1	1	–	5	5
006	1	2	–	3	6
007	1	1	6	4	5
009	2	9	8	7	10
011	1	1	–	4	5
014	1	1	6	5	4
015	2	1	–	6	5
020	3	5	–	3	5
030	2	3	–	6	7

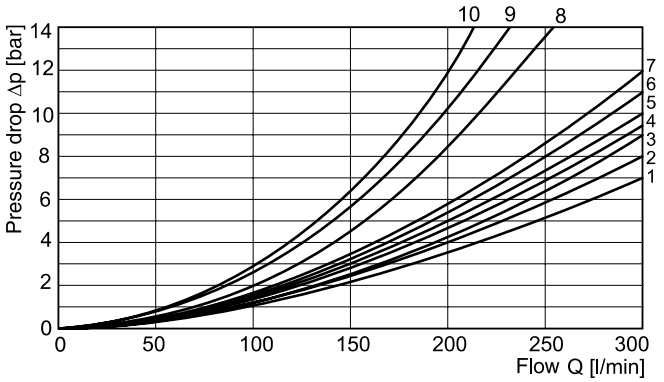

D9L

	Curve number				
Spool	P-A	P-B	P-T	A-T	B-T
001	3	2	-	3	5
002	2	1	1	3	5
003	4	2	-	3	6
004	4	3	-	3	5
007	3	1	7	3	5
009	4	8	9	4	10
014	1	3	7	5	3
015	2	4	-	5	3
020	6	5	-	6	8
030	3	2	-	3	5

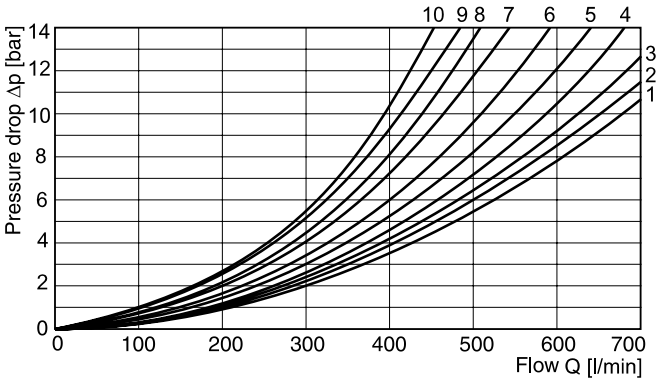

All characteristic curves measured with HLP46 at 50 °C.

2

D1VL*4J

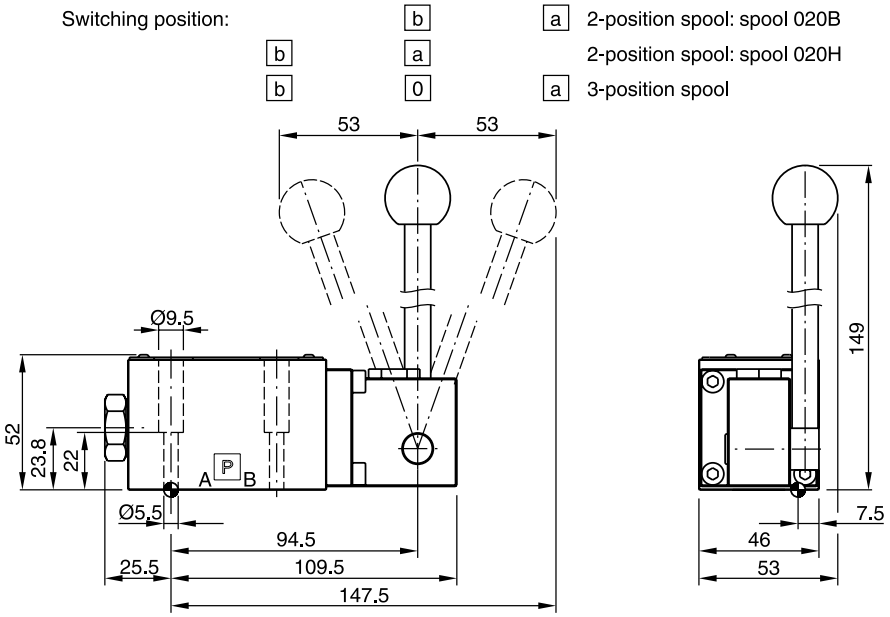

D1VL*4K

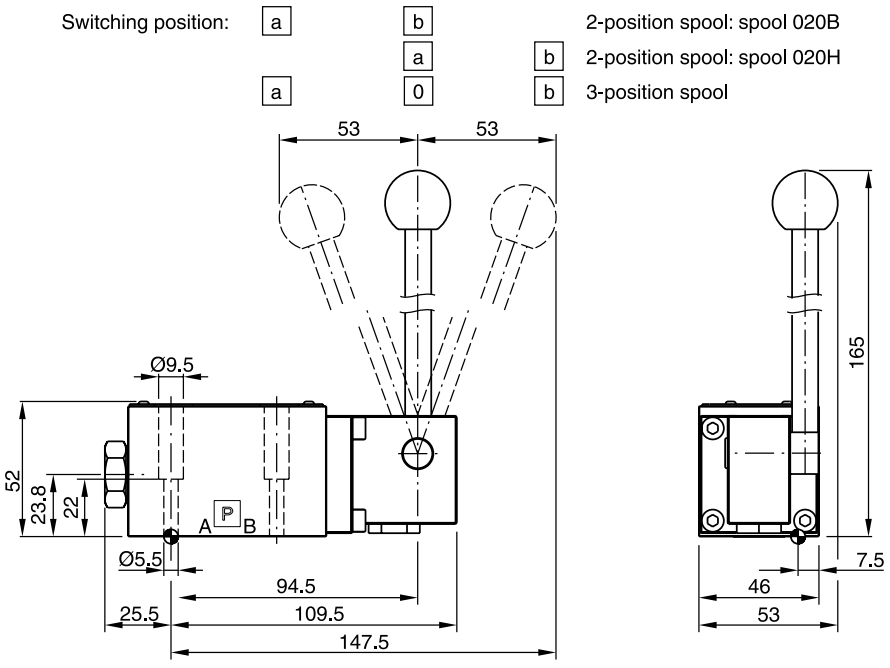

Surface finish	Kit			Kit
$\sqrt{R_{max}6.3}$ ▱ 0.01/100	BK375	4x M5x30 ISO 4762-12.9	7.6 Nm ±15 %	**NBR: SK-D1VL-N-91** FPM: SK-D1VL-V-91

Valid for all styles. Switching position see ordering code.

D1VLB*4J

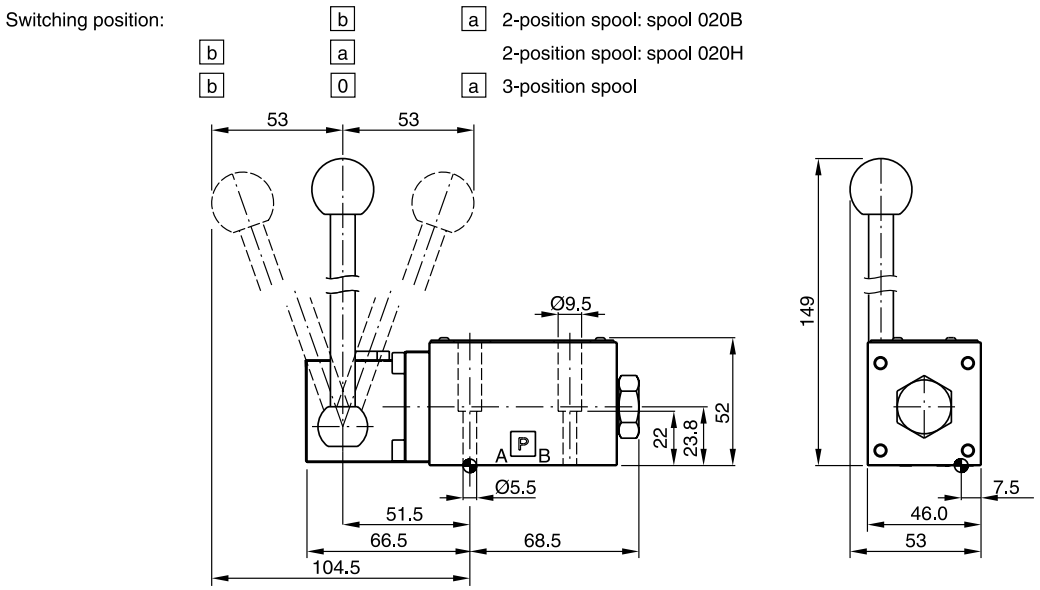

Surface finish	Kit			Kit
$\sqrt{R_{max}6.3}$ 0.01/100	BK375	4x M5x30 ISO 4762-12.9	7.6 Nm ±15 %	**NBR: SK-D1VL-N-91** FPM: SK-D1VL-V-91

D3DL*4J

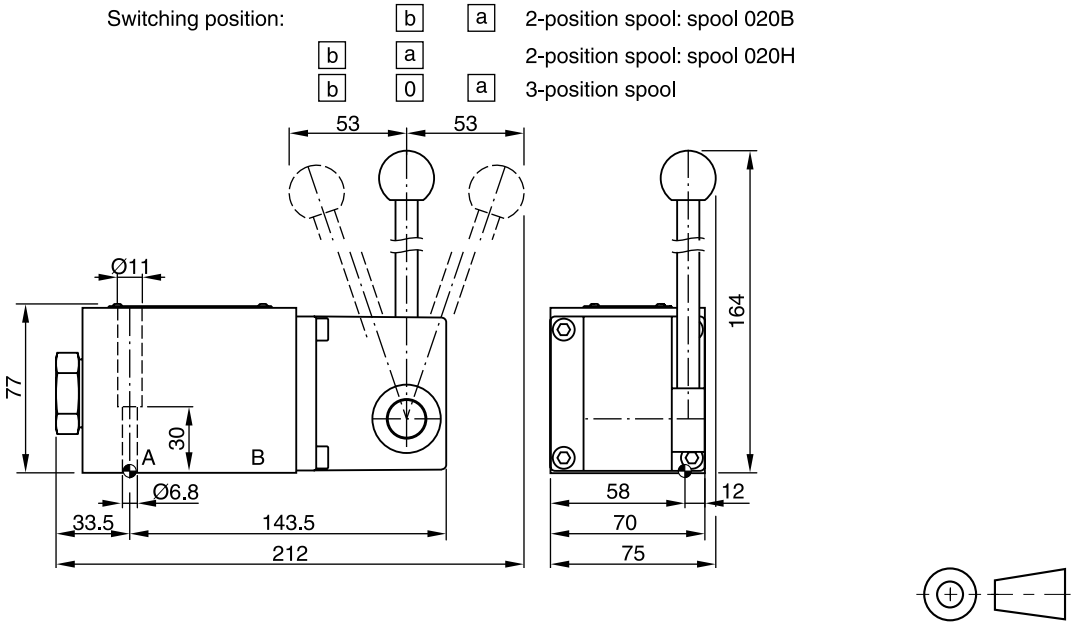

Surface finish	Kit			Kit
$\sqrt{R_{max}6.3}$ 0.01/100	BK385	4x M6x40 ISO 4762-12.9	13.2 Nm ±15 %	**NBR: SK-D3DL-N-42** FPM: SK-D3DL-V-42

Valid for all styles. Switching position see ordering code.

2

D3DL*4K

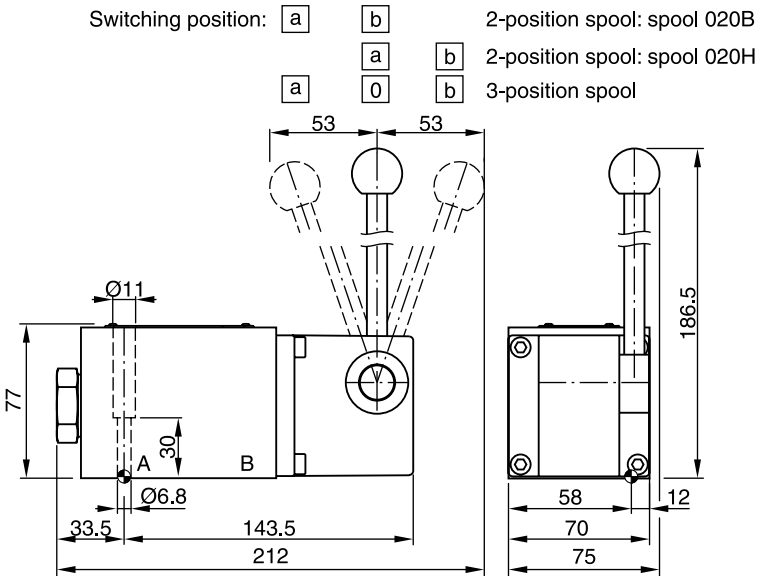

D3DLB*4J

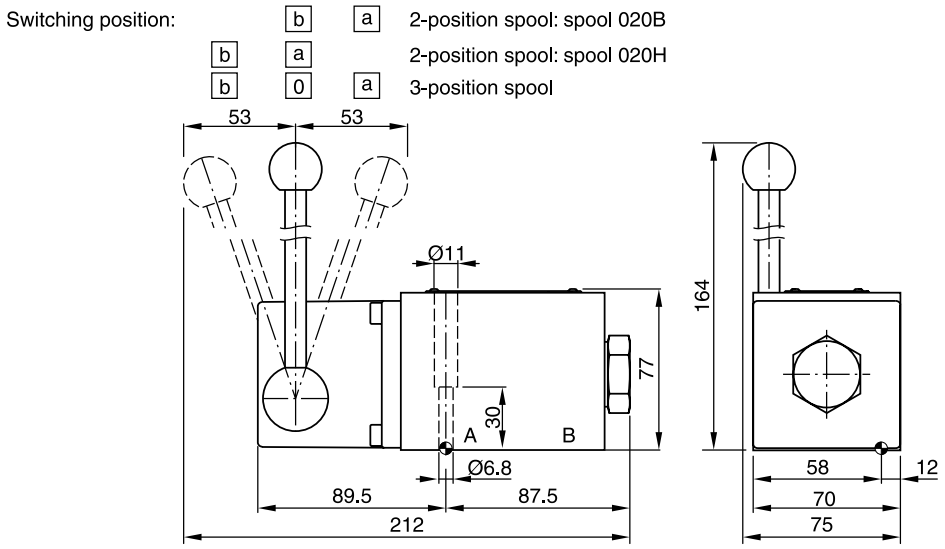

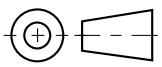

Surface finish	Kit			Kit
R_{max}6.3 ▱ 0.01/100	BK385	4x M6x40 ISO 4762-12.9	13.2 Nm ±15 %	**NBR: SK-D3DL-N-35** FPM: SK-D3DL-V-35

Valid for all styles. Switching position see ordering code.

D4L

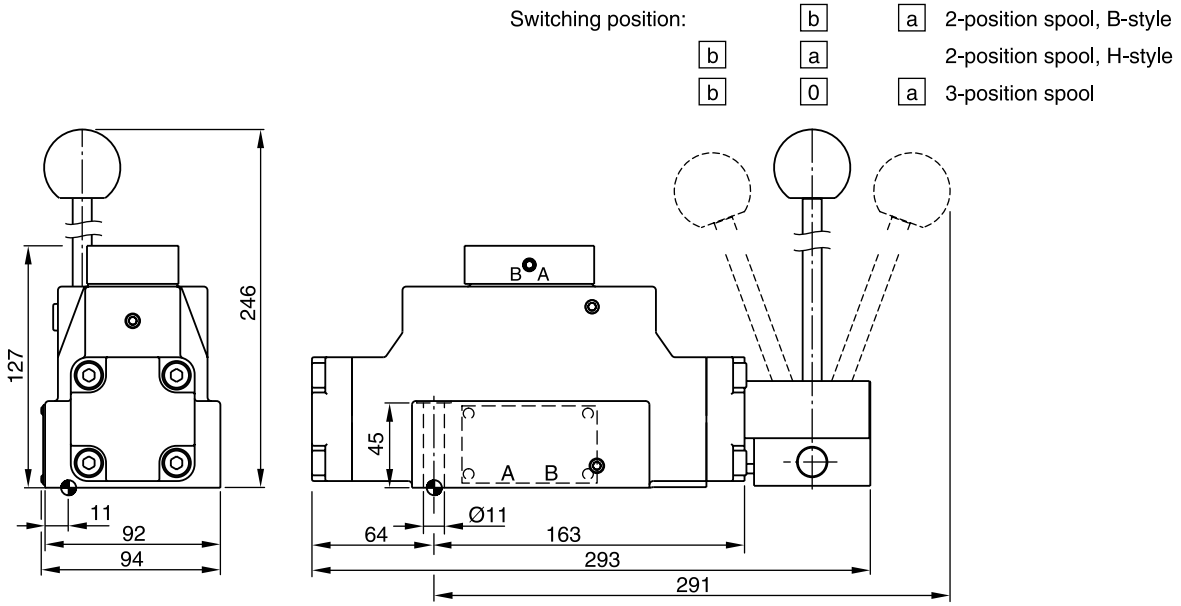

D4LB

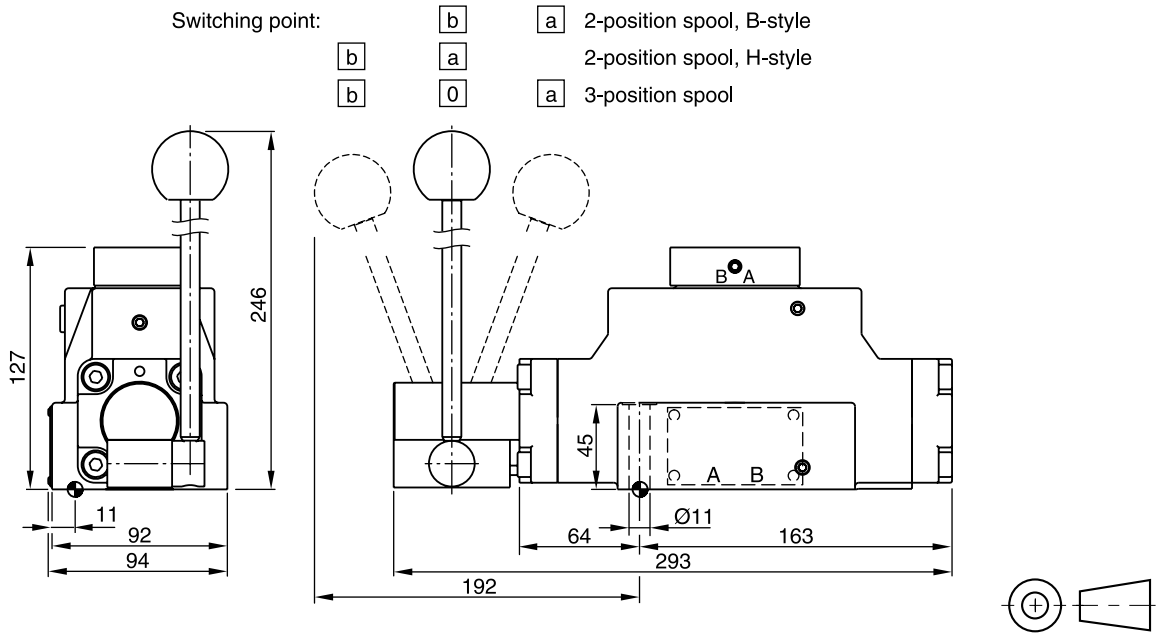

Surface finish	Kit			Kit
R_{max}6.3 ⏥ 0.01/100	BK320	4x M10x60 2x M6x55 ISO 4762-12.9	63 Nm 13.2 Nm ±15 %	**NBR: SK-D4L-N-91** FPM: SK-D4L-V-91

Valid for all styles. Switching position see ordering code.

2

D9L

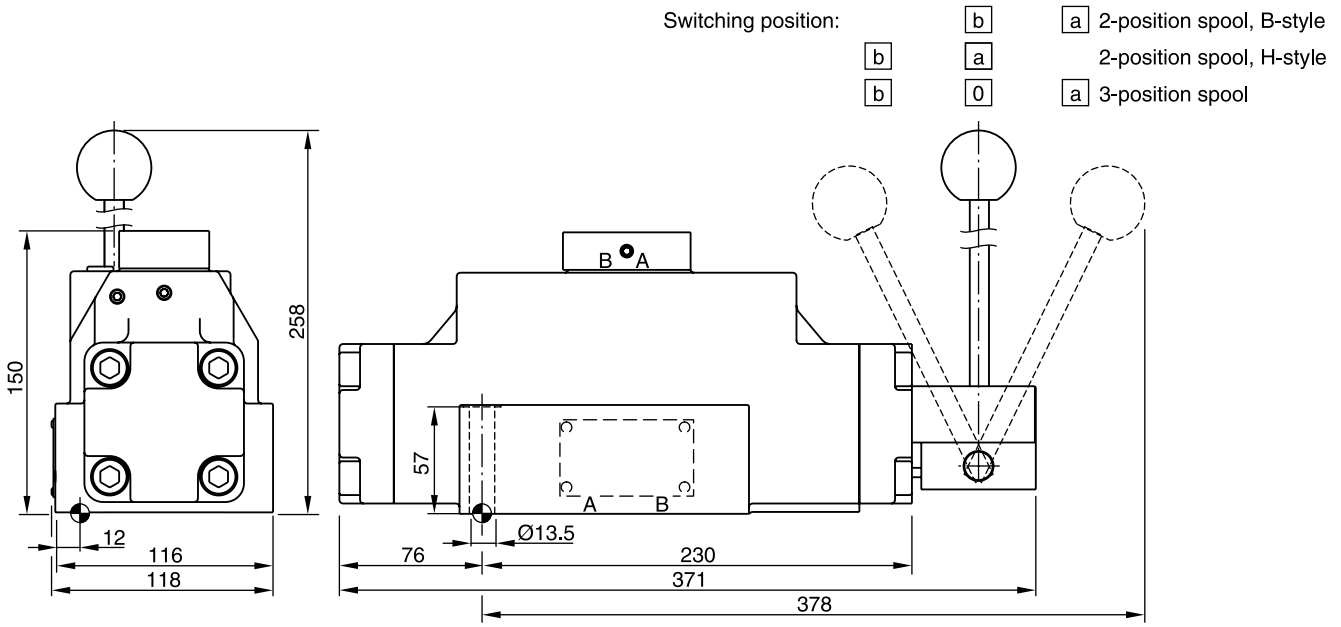

D9LB

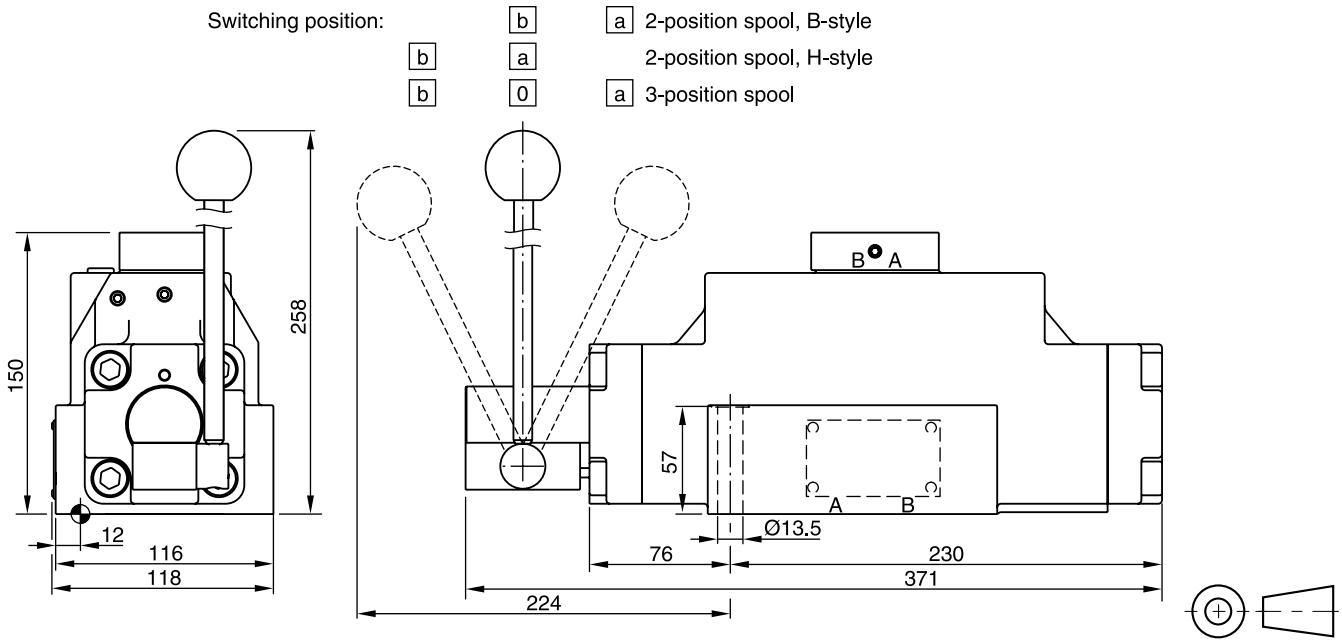

Surface finish	Kit			Kit
R_{max}6.3 ▱ 0.01/100	BK360	6x M12x75 ISO 4762-12.9	108 Nm ±15 %	**NBR: SK-D9L-N-91** FPM: SK-D9L-V-91

Valid for all styles. Switching position see ordering code.

Description	Cable connection	Figure circuit	Order no. black (B)	Order no. grey (A)
Plug EN 175301-803 [1], style AF Protection class IP65 for voltages up to 250V	PG 9 PG 11	Fig. 1	5001710 5001716	5001711 5001717
Plug with LED 24VDC	PG 11	Fig. 1 and 3	5001571	5001572
Plug with lamp insert 120VAC Plug with lamp insert 230VAC		Fig. 1 and 4	5001573 5001575	5001574 5001576
Plug with LED 24VDC and suppressing circuit		Fig. 1 and 5	5001708	5001709
Plug with rectifier: Bridge-type rectifier with silicon diodes. Varistors are used to protect the diodes against power surges from the power supply up to 250VAC.	PG 11	Fig. 1 and 6	5001737	5001738
Plug with cable strain relief and transparent cover		Fig. 2	5001723	5001724
Inserts for plug 5001723 and 5001724		Cicuit	Order no.	
Bridge-type rectifier up to 250VAC 7		7	5001727	
Bridge-type rectifier with lamp 250VAC		8	5001734	

Fig. 1

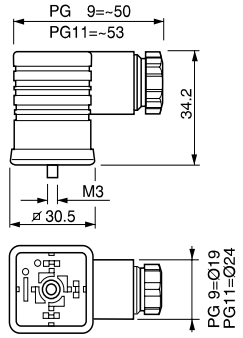

Fig. 2

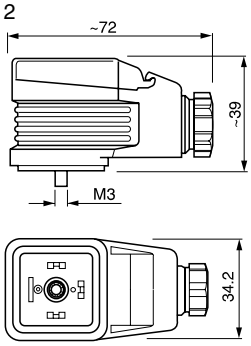

Fig. 3

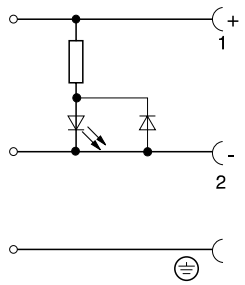

Fig. 4

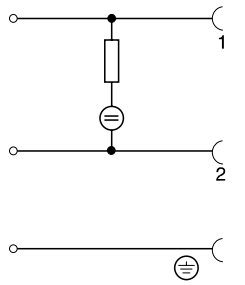

Fig. 5

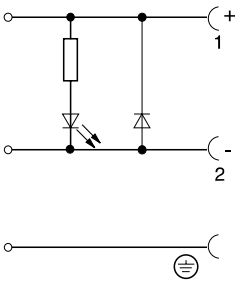

Fig. 6

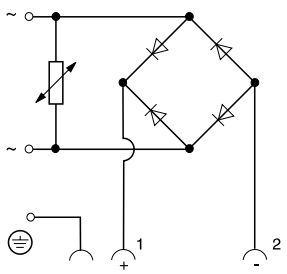

Fig. 7

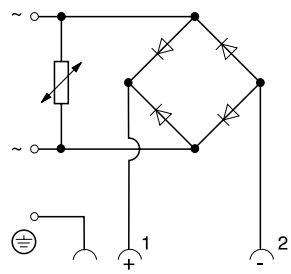

Fig. 8

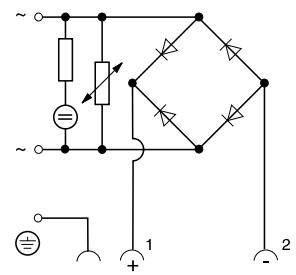

Plug M12x1, order no.: 5004109

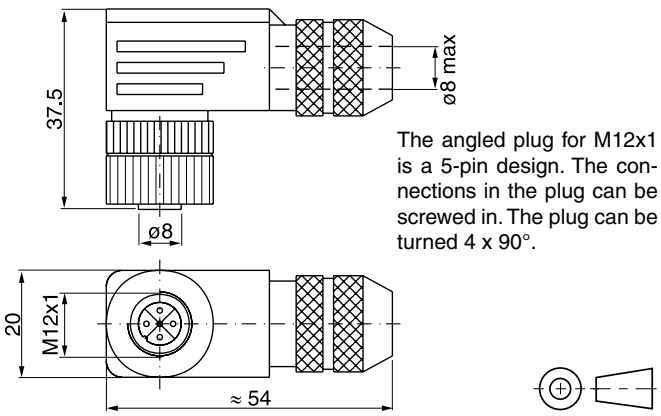

The angled plug for M12x1 is a 5-pin design. The connections in the plug can be screwed in. The plug can be turned 4 x 90°.

Plug kit 2-pin Junior Timer (AMP)

Order no.	Number of plugs in 1 kit
393 000 K822	1
393 000 K825	10
393 000 K826	50
393 000 K827	100

Plug kit DT04-2P "Deutsch"

Order no.	Number of plugs in 1 kit
45216087	1

[1] (New) EN 175301-803 corresponds to (old) DIN 43650.

2

Solenoid kit (displayed: **EN plug**)
A solenoid kit contains tube, coil, retainer and seals for the solenoid, if necessary for the ordered version.

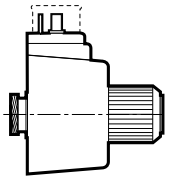
AC

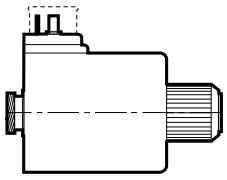
DC

Coil kit
A coil kit contains coil, retainer and seals for the coil, if necessary for the ordered version.

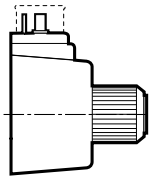
AC

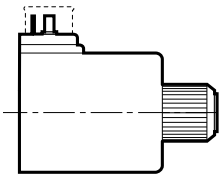
DC

For D1VW standard

Solenoid kits: **AK-D1VWS...** (Soft shift on request)			(Example: **AK-D1VWSJW91**)
Voltage Volt/Hertz	Voltage Code	EN plug D1VW	EN plug without manual override (Code „T“) D1VW
12 V=	K	**KW91**	KWT91
24 V=	J	**JW91**	JWT91
98 V=	U	UW91	UWT91
205 V=	G	GW91	GWT91
110 V/50 Hz / 120 V/60 Hz	Y	**YW91**	–
230 V/50 Hz / 240 V/60 Hz	T	**TW91**	–

Coil kits: **AK-D1VWC...**	(Example: **AK-D1VWCJW91**)	
Voltage Volt/Hertz	Voltage Code	EN plug D1VW
12 V=	K	**KW91**
24 V=	J	**JW91**
98 V=	U	UW91
205 V=	G	GW91
110 V/50 Hz / 120 V/60 Hz	Y	**YW91**
230 V/50 Hz / 240 V/60 Hz	T	**TW91**

D1VW 8 Watt

Solenoid kits: **AK-D1VWS...**				Coil kits: **AK-D1VWC...**	
Voltage Volt/Hertz	Voltage Code	EN plug D1VW	M12x1 „DESINA“ (Code „DLJ5“) D1VW	EN plug D1VW	M12x1 „DESINA“ (Code „DLJ5“) D1VW
24 V=	J	JWL91	JDLJ591	**JWL91**	JDLJ591

D3W

Solenoid kits: **AK-D3WS...** (Soft shift on request) (Example: **AK-D3WSJW30**)				Coil kits: **AK-D3WC...**	
Voltage Volt/Hertz	Voltage Code	EN plug D3W	EN plug without manual override (Code „T“) D3W	EN plug D3W	EN plug without manual override (Code „T“) D3W
12 V= 24 V= 98 V= 205 V=	K J U G	KW30 **JW30** UW30 GW30	KWT30 JWT30 UWT30 GWT30	KW30 **JW30** UW30 GW30	KWT30 JWT30 UWT30 GWT30
110 V/50 Hz 120 V/60 Hz	Y	**YW30**	–	**YW30**	–
230 V/50 Hz 240 V/60 Hz	T	**TW30**	–	**TW30**	–

Other solenoids, coil kits and tube kits on request.

Bold letters =
Short-term availability

O-rings to seal between valve and mounting surface

Valve size	Valve series	Ports	Dimensions inner Ø x section Ø	Quantity [1]
DIN NG06	**D1**	P, A, B, T X, Y	9.25 x 1.78 4.47 x 1.78	4 2
DIN NG10	**D3**	P, A, B, T X, Y	12.42 x 1.78 10.82 x 1.78	5 2
DIN NG16	**D4**	P, A, B, T X, Y	21.89 x 2.62 10.82 x 1.78	4 2
DIN NG25	**D8**	P, A, B, T X, Y	29.82 x 2.62 20.29 x 2.62	4 2
DIN NG25	**D9**	P, A, B, T X, Y	34.59 x 2.62 20.29 x 2.62	4 2
DIN NG32	**D11**	P, A, B, T X, Y	53.57 x 3.53 14.00 x 1.78	4 2

Seal kits (connecting surface and inner seals)
Spool valves

Valve series	Material	Order code for valve size						
		D1	D3	D31	D4	D8	D9	D11
D**W Solenoid	NBR	SK-D1VW-N-91	SK-D3W-N-30	–	SK-D41VW-N-91	SK-D81VW-N-91	SK-D91VW-N-91	SK-D111VW-N-91
	FPM	SK-D1VW-V-91	SK-D3W-V-30	–	SK-D41VW-V-91	SK-D81VW-V-91	SK-D91VW-V-91	SK-D111VW-V-91
D*DW Solenoid	NBR	–		SK-D31DW-N-91	–			
	FPM			SK-D31DW-V-91				
D*NW Solenoid	NBR			SK-D31NW-N-91				
	FPM			SK-D31NW-V-91				
D**P Hydr.	NBR	–	SK-D3DP-N-35	–	SK-D41VW-N-91	–	SK-D91VW-N-91	SK-D111VW-N-91
	FPM	–	SK-D3DP-V-35	–	SK-D41VW-V-91	–	SK-D91VW-V-91	SK-D111VW-V-91
D1VP*90 Hydr.	NBR	SK-D1VP-N-87	–					
	FPM	SK-D1VP-V-87						
D1VP*4L Hydr.	NBR	SK-D1VP-N4L-91						
	FPM	SK-D1VP-V4L-91						
D*L/LB Hand lever	NBR	SK-D1VL-N-91	SK-D3DL-N-35	–	SK-D4L-N-91	–	SK-D9L-N-91	–
	FPM	SK-D1VL-V-91	SK-D3DL-V-35	–	SK-D4L-V-91	–	SK-D9L-V-91	–

Seated valve

Valve series	Material	D1SE
D1SE Solenoid	NBR	SK-D1SE-70
	FPM	SK-D1SE-V70

[1] Number per set

2

Slip-in orifice for P, A, B port of directional control valves NG06 and NG10

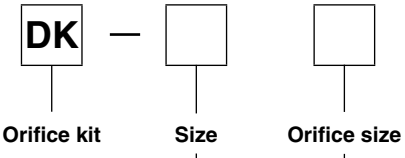

Code	Size
D1VW91	NG06
D3W31	NG10

Code	Orifice Ø	NG6	NG10
00	without orifice	x	x
06	0.6 mm	x	
08	0.8 mm	x	x
09	0.9 mm	x	
10	1.0 mm	x	x
11	1.1 mm	x	
12	1.2 mm	x	x
14	1.4 mm	x	x
15	1.5 mm	x	x
18	1.8 mm	x	
20	2.0 mm	x	x
25	2.5 mm	x	x
30	3.0 mm		x
45	4.5 mm		x

The orifice kit DK-D1VW91 includes special O-rings (NBR - black and FPM - green) which have to be used with the orifice.
Package size: Each kit contains 10 orifices of the same size.

Dimensions

NG06

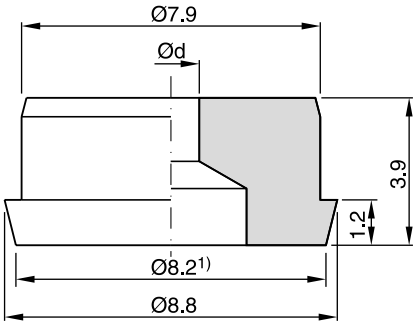

NG10

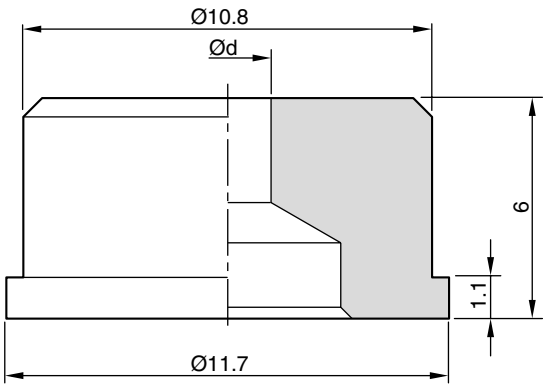

[1)] Only for ports P, A, B with max. dia. 7.5 mm.

Size 6, mounting pattern to ISO 4401-03-03-0-05

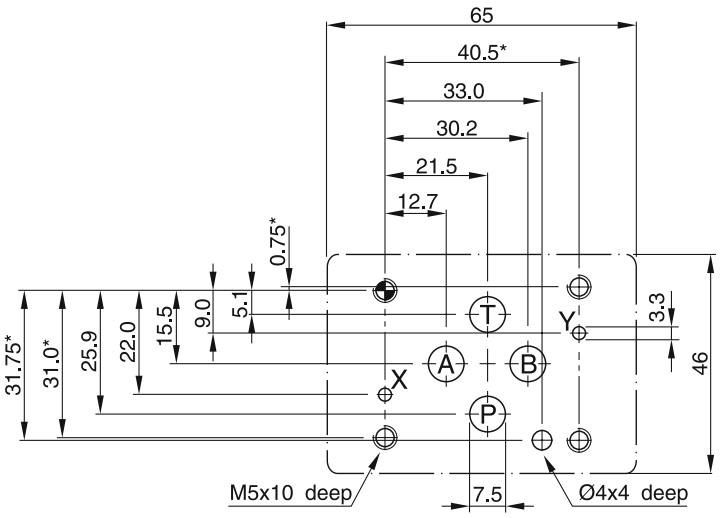

Size 10, mounting pattern to ISO 4401-05-05-0-05

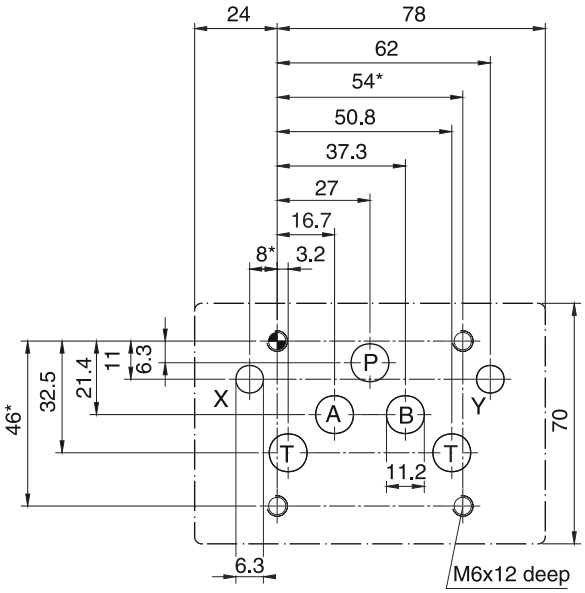

Deviating from ISO 4401
these diameters are possible:
X, Y = Ø 8 max.

Size 16, mounting pattern to ISO 4401-07-07-0-05

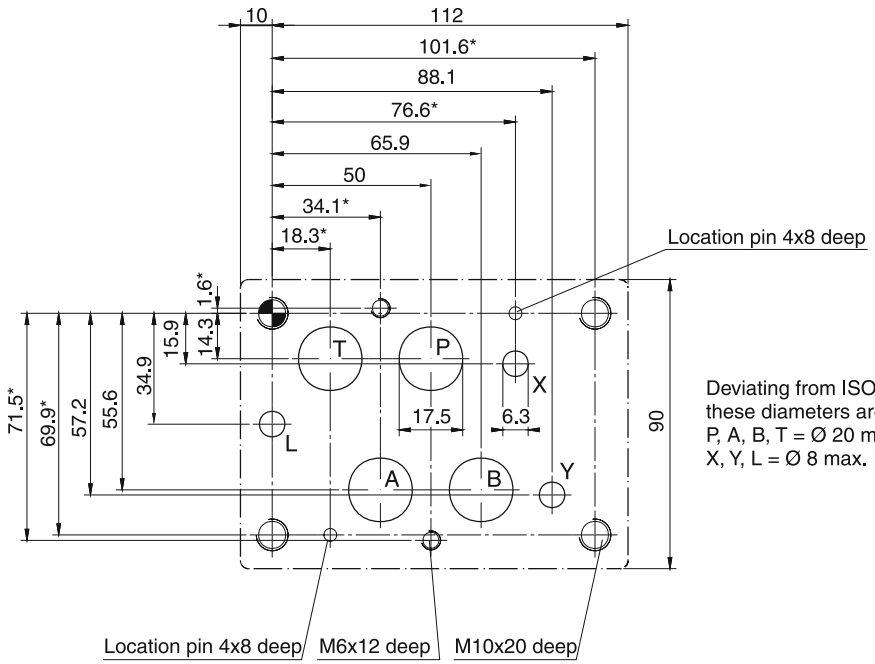

Deviating from ISO 4401
these diameters are possible:
P, A, B, T = Ø 20 max.
X, Y, L = Ø 8 max.

With * marked dimensions ± 0.1 mm. All other dimensions ± 0.2 mm.

Subplates and manifolds see chapter 12.

2

Size 25, mounting pattern to ISO 4401-08-08-0-05

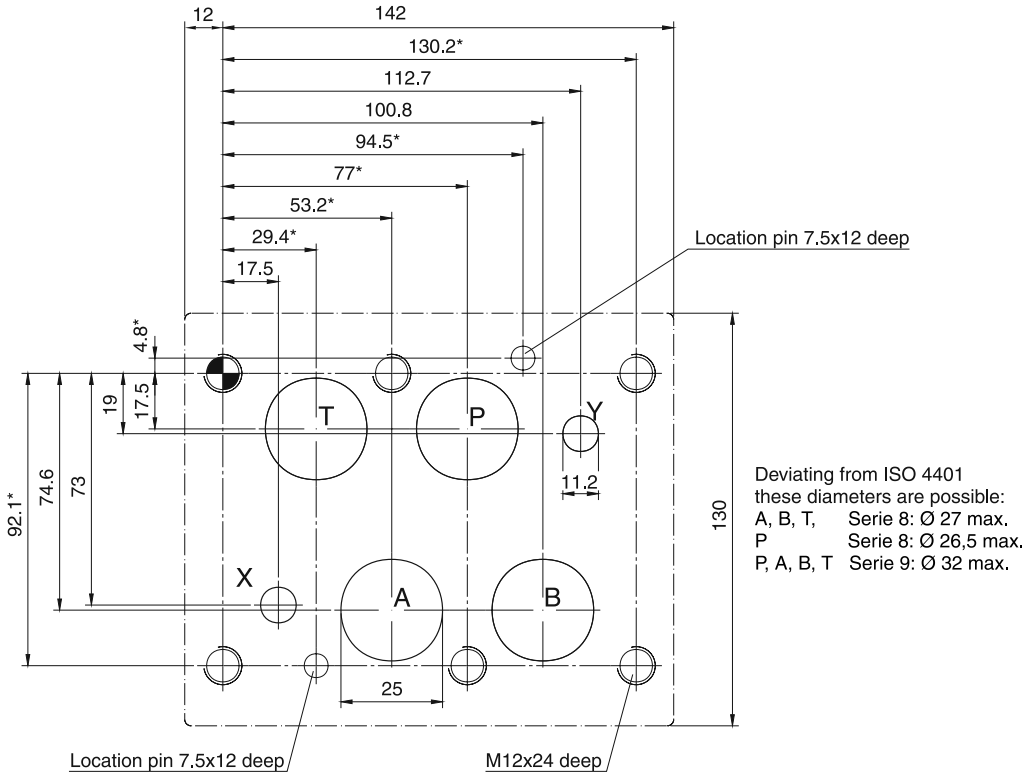

Size 32, mounting pattern to ISO 4401-10-09-0-05

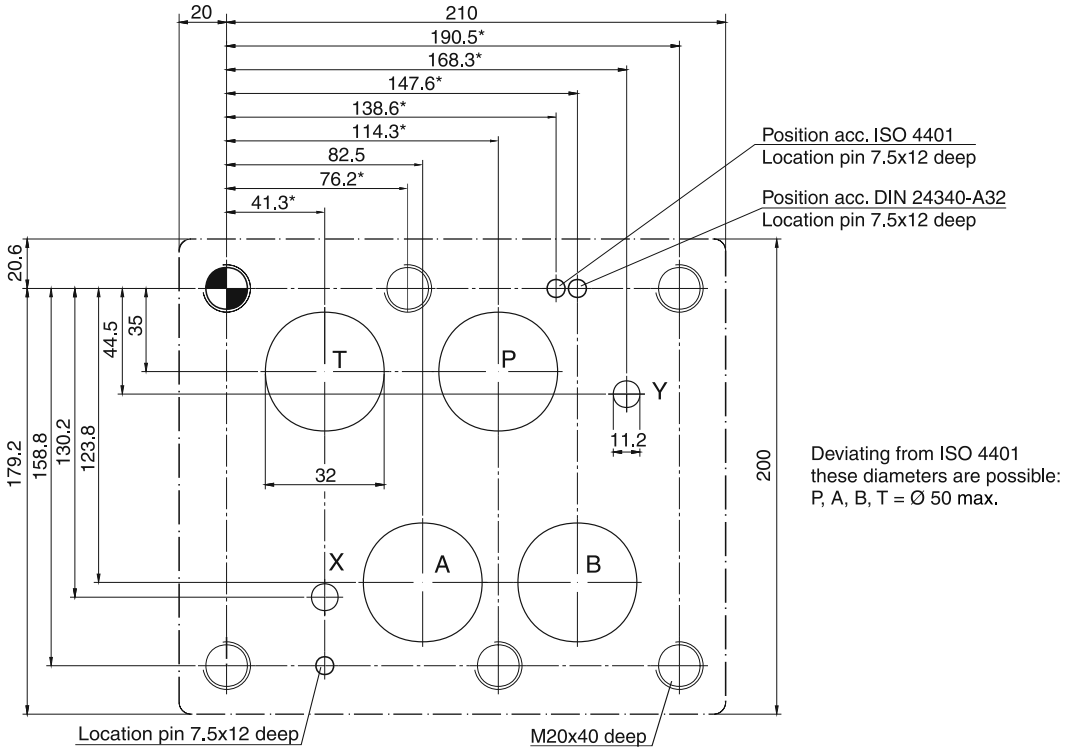

With * marked dimensions ± 0.1 mm. All other dimensions ± 0.2 mm.

Subplates and manifolds see chapter 12.

Series	Description	Size	Operation		Electronics		LVDT	Spool Design			Page
		DIN/ISO	direct	pilot	external	onboard		Overlap	Zero lap	Spool/ sleeve	
Introduction											3-2
	Standard										
D1FB		NG06	•		•			•	optional	optional	3-3
D1FB OBE		NG06	•			•		•	optional	optional	
D3FB		NG10	•		•			•		optional	3-14
D3FB OBE		NG10	•			•		•		optional	
D31FB		NG10		•	•			•			3-24
D31FB OBE		NG10		•		•		•			
D41FB		NG16		•	•			•			
D41FB OBE		NG16		•		•		•			
D91FB		NG25		•	•			•			
D91FB OBE		NG25		•		•		•			
D111FB		NG32		•	•			•			
D111FB OBE		NG32		•		•		•			
D1FV*3	Pilot valve	NG06	•		•			•			3-40
D1FV*3 OBE	Pilot valve	NG06	•			•		•			
	High repeatability										
D1FC		NG06	•			•	•	•			3-48
D3FC		NG10	•			•	•	•			3-56
D31FC		NG10		•		•	•	•			3-64
D41FC		NG16		•		•	•	•			
D91FC		NG25		•		•	•	•			
D111FC		NG32		•		•	•	•			
D*FC, D*1FC	EtherCAT		•	•		•	•	•			3-75
	VCD® performance*, for closed loop applications										
D1FP		NG06	•			•	•	•	•	•	3-78
D3FP		NG10	•			•	•	•	•	•	3-85
D30FP		NG10		•		•	•	•	•		3-92
D31FP		NG10		•		•	•	•	•		3-99
D41FP		NG16		•		•	•	•	•		
D91FP		NG25		•		•	•	•	•		
D111FP		NG32		•		•	•	•	•		
D*FP, D*1FP	EtherCAT		•	•		•	•	•	•	•	3-110
	Accessories										
	Plug-in connectors										3-113
	Actuator kits / coil kits										3-114
	Mounting patterns										3-115

* VCD® = Voice Coil Drive technology

Introduction: Proportional DC Valves

Proportional valves and servo proportional valves are characterized by a number of design features that determine their quality to fit into different applications. The main features are listed below.

Solenoid drive (proportional valves):
Solenoids operate unidirectionally against a spring, provide high force and are - because of high inductance - limited in their dynamics.

Voice Coil Drive® :
A moving coil in the field of a static permanent magnet operates bi-directionally. Springs are only needed to ensure the power-down position. The low inductance allows highest dynamics.

External electronics:
Valves without integrated electronics are less sensitive to vibration and high temperature. LVDTs always include integrated electronics.

Integrated electronics (onboard electronics - OBE):
Onboard electronics simplifies the installation and improves the repeatability from valve to valve.

LVDT (spool position feedback):
Closed loop control of the spool position improves the sensitivity and accuracy.

Direct operated (d.o.):
High hydraulic output can be achieved with low electric power input.

Pilot operated (p.o.):
Beyond the functional limits of direct operated valves hydraulic amplification is required.

Positive spool overlap:
To avoid load drifting in the zero position, spools with positive overlap are used.

Zero lap spools:
In closed loop circuits zero lap spools are used for an effective control of the spool at low position errors.

Spool/sleeve design:
For minimal hysteresis, high precision, and better wear resistance, the spool/sleeve design is preferred over the spool/body design.

Regenerative valves:
In applications with differential cylinders it is common to feed the return flow from the rod side of the cylinder back to the piston side to achieve higher velocity or lower pump flow. Parker differentiates between regeneration to the pressure level of the pump (P-regeneration) or directly to the piston area respectively the A-port of the valve (A-regeneration). The Parker regenerative valves use the advantageous A-regeneration.

Hybrid valves:
Regenerative valves with an integrated solenoid valve - to switch to the standard mode - are called Hybrid Valves at Parker. The regenerative mode is used for maximum velocity, the standard mode for maximum force.

Regenerative and hybrid valves are also available as on/off directional control valves.

The proportional directional valves D1FB (NG06) are available with and without onboard electronics (OBE).

D1FB OBE:

The digital onboard electronics is situated in a robust metal housing, which allows the usage under rough environmental conditions.

The nominal values are factory set. The cable connection to a serial RS232 interface is available as accessory.

D1FB for external electronics:

The parameters can be saved, changed and duplicated in combination with the digital power amplifier PWD00A-400.

The valve parameters can be edited with the common ProPxD software for both versions.

The D1FB valves can be ordered with spool/sleeve design (D1FB*0) for maximum precision as well as spool/body design (D1FB*3) for high nominal flow - see functional limit curves for maximum flow capability.
Valves with explosion proof solenoids Ex e mb II see catalogue HY11-3343.
Download: www.parker.com/euro_hcd - see “Literature”



D1FB



D1FB OBE

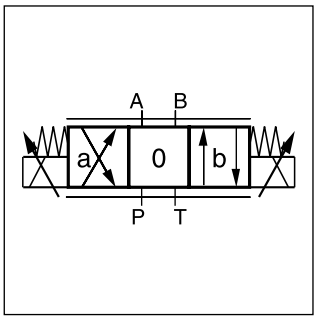

D1FB

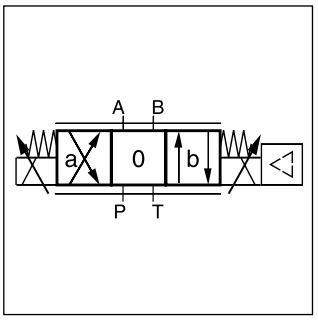

D1FB OBE

Features

- Spool/sleeve and spool/body
- 3 command options for D1FB OBE:
  +/- 10 V, 4…20 mA, +/- 20 mA
- High repeatability from valve to valve
- Low hysteresis
- Manual override
- Digital onboard electronics

D1FB*0 OBE
Spool/sleeve design

D1FB*3 OBE
Spool/body design

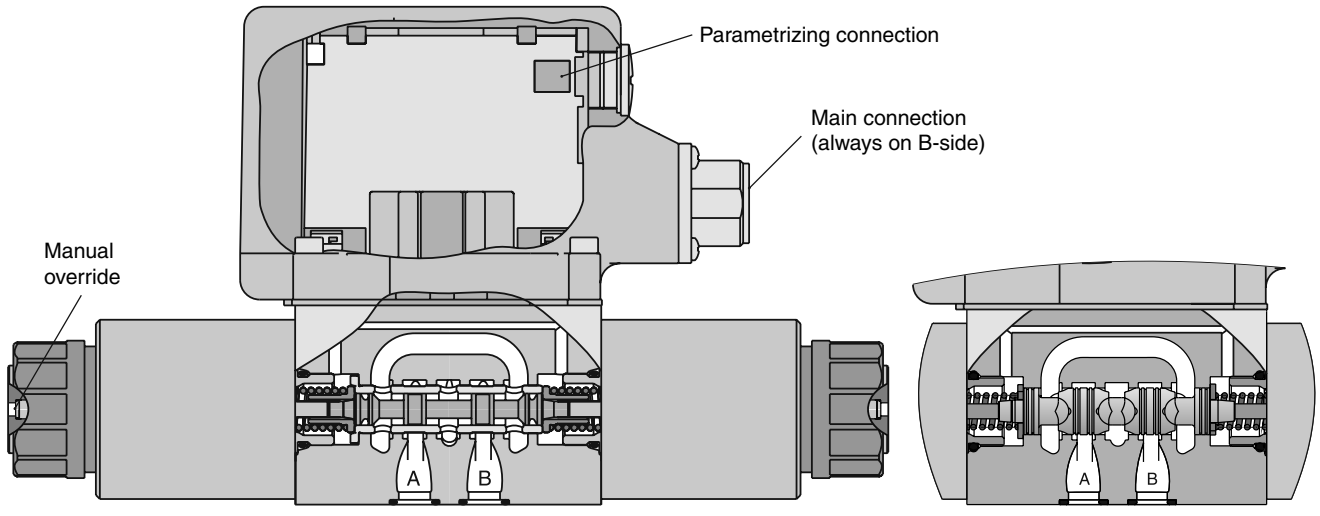

D1FB

D	1	F	B			0	N				
Directional control valve	**Size DIN NG06 CETOP 03 NFPA D03**	**Proportional control**	**Standard dynamics standard repeatability**	**Spool type**	**Spool position**		**Seals NBR** (other seal compounds on request)	**Solenoid**	**Connector**	**Design**	**Design series** (not required for ordering)

3

D1FB*0: Spool/sleeve design		
Code	Spool type	Flow [l/min] at Δp 5 bar per metering edge
Overlap		
E01C **E01F** **E01H**	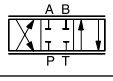	**6** **12** **20**
E02C **E02F** **E02H**		**6** **12** **20**
E03C **E03F** **E03H**		**6** **12** **20**
B31F **B31H**	$Q_B = Q_A/2$ 	**12 / 6** **20 / 10**
B32F **B32H**	$Q_B = Q_A/2$ 	**12 / 6** **20 / 10**

D1FB*3: Spool/body design		
Code	Spool type	Flow [l/min] at Δp 5 bar per metering edge
Overlap		
E01F **E01H** **E01K**	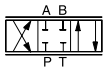	**10** **20** **30**
E02F **E02H** **E02K**		**10** **20** **30**
B31F **B31H** **B31K**	$Q_B = Q_A/2$ 	**10 / 5** **20 / 10** **30 / 15**
B32F **B32H** **B32K**	$Q_B = Q_A/2$ 	**10 / 5** **20 / 10** **30 / 15**

Code	Design
0	**Spool/sleeve design**
3	**Spool/body design**

Code	Connector
W [1]	**Connector as per EN 175301-803**
J [1) 2)]	**Connector DT04-2P "Deutsch"**

D1FB*0: Spool/sleeve design	
Code	Solenoid
M	**9 V / 2.7 A**
J	**24 V / 0.8 A**

D1FB*3: Spool/body design	
Code	Solenoid
K	**12 V / 2.2 A**
J	**24 V / 1.1 A**

Code	Design
C	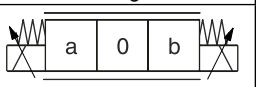
E	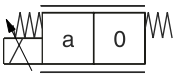
K	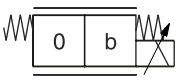

Short delivery time for all variations

[1)] Please order connector separately, see chapter 3 accessories.
[2)] Not for spool/sleeve design.

D1FB OBE (with onboard electronics)

D	1	F	B			0	N				
Directional control valve	**Size DIN NG06 CETOP 03 NFPA D03**	**Proportional control**	**Standard dynamics standard repeatability**	**Spool type**	**Spool position**		**Seals NBR** (other seal compounds on request)	**Input signal**	**Options**	**Design**	**Design series** (not required for ordering)

Code	Design
0	**Spool/sleeve design**
3	**Spool/body design**

Code	Input signal [2]	Function	Port	Options
F0	**0...+/-10 V**	**0...+10 V > P-A**	**6 + PE**	**Potentiometer supply**
G0	**0...+/-20 mA**	**0...+20 mA > P-A**	**6 + PE**	**—**
S0	**4...20 mA**	**12...20 mA > P-A**	**6 + PE**	**—**
W5 [1]	**0...+/-10 V 4...20 mA**	**0...+10 V > P-A 12...20 mA > P-A**	**11 + PE**	**Command channel & potentiometer supply**

D1FB*0: Spool/sleeve design		
Code	Spool type	Flow [l/min] at Δp 5 bar per metering edge
Overlap		
E01C E01F E01H	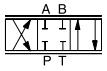	**6 12 20**
E02C E02F E02H		**6 12 20**
E03C E03F E03H		**6 12 20**
B31F B31H	$Q_B = Q_A/2$ 	**12 / 6 20 / 10**
B32F B32H	$Q_B = Q_A/2$ 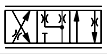	**12 / 6 20 / 10**

D1FB*3: Spool/body design		
Code	Spool type	Flow [l/min] at Δp 5 bar per metering edge
Overlap		
E01F E01H E01K	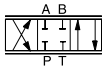	**10 20 30**
E02F E02H E02K		**10 20 30**
B31F B31H B31K	$Q_B = Q_A/2$ 	**10 / 5 20 / 10 30 / 15**
B32F B32H B32K	$Q_B = Q_A/2$ 	**10 / 5 20 / 10 30 / 15**

Code	Design
C	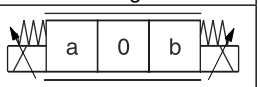
E	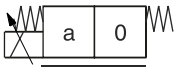
K	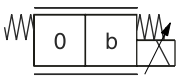

Please order connector separately, see chapter 3 accessories.
Parametrizing cable OBE → RS232: Item no. 40982923

Short delivery time for all variations

[1] Factory set ± 10 V on delivery.
[2] Single solenoid always 0...+10 V respectively 4...20 mA.

3

General				
Design		Direct operated proportional DC valve		
Actuation		Proportional solenoid		
Size		NG06/CETOP 03/NFPA D03		
Mounting interface		DIN 24340 / ISO 4401 / CETOP RP121 / NFPA		
Mounting position		unrestricted		
Ambient temperature	[°C]	-20...+60		
$MTTF_D$ value [1]	[years]	150		
Weight (OBE)	[kg]	2.2 (2.9)		
Hydraulic				
Max. operating pressure	[bar]	Ports P, A, B 350; Port T 210		
Max. pressure drop PABT / PBAT	[bar]	350		
Fluid		Hydraulic oil according to DIN 51524 ... 535, other on request		
Fluid temperature	[°C]	-25...+60		
Viscosity permitted recommended	[cSt] / [mm²/s] [cSt] / [mm²/s]	20...400 30...80		
Filtration		ISO 4406; 18/16/13		
Nominal flow at Δp = 5 bar per control edge [2]	[l/min]	**D1FB*0 (Spool/sleeve)** 6/12/20	**D1FB*3 (Spool/body)** 10/20/30	
Leakage at 100 bar	[ml/min]	<50	<60	
Opening point (OBE)	[%]	see flow characteristics (set to 10 command signal)		
Static / Dynamic				
Step response at 100 % step	[ms]	30	30	
Hysteresis	[%]	<4	<6	
Temperature drift solenoid current	[%/K]	<0.02		
Electrical characteristics				
Duty ratio	[%]	100 ED; CAUTION: Coil temperature up to 150 °C possible		
Protection class		Standard (as per EN 175301-803) IP65 in accordance with EN 60529 (with correctly mounted plug-in connector) DT04-2P "Deutsch" IP69K (with correctly mounted plug-in connector)		
Solenoid		**Code "M"**	**Code "K"**	**Code "J" (Spool/sleeve)**
Supply voltage	[V]	9	12	24
Current consumption	[A]	2.7	2.2	1.1 (0.8)
Resistance	[Ohm]	2.7	4.4	18.6
Solenoid connection		Connector as per EN 175301-803 (code W), DT04-2P "Deutsch" connector (code J). Solenoid identification as per ISO 9461.		
Wiring min.	[mm²]	3x1.5 (AWG 16) overall braid shield (Code W), "Deutsch" connector DP4 2-Pin (Code J)		
Wiring lenght max.	[m]	50		

[1] If valves with onboard electronics are used in safety-related parts of control systems, in case the safety function is requested, the valve electronics voltage supply is to be switched off by a suitable switching element with sufficient reliability.

[2] Flow rate for different Δp per control edge: $Q_x = Q_{Nom.} \cdot \sqrt{\frac{\Delta p_x}{\Delta p_{Nom.}}}$

Electrical characteristics OBE		
Vibration resistance	[g]	10 Sinus 5...2000 Hz acc. IEC 68-2-6 10 (RMS) Random noise 20...2000 Hz acc. IEC 68-2-36 15 Shock acc. IEC 68-2-27
Duty ratio	[%]	100 ED; CAUTION: Coil temperature up to 150 °C possible
Protection class		IP65 in accordance with EN 60529 (with correctly mounted plug-in connector)
Supply voltage/ripple DC	[V]	18...30, ripple < 5 % eff., surge free
Current consumption max.	[A]	2.0
Pre fusing medium lag	[A]	2.5
Input signal		
Codes F0 & W5 voltage	[V]	+10...0...-10, ripple < 0.01 % eff., surge free, Ri = 100 kOhm, 0...+10 V ⇒ P -> A
Codes S0 & W5 current	[mA]	4...12...20, ripple < 0.01 % eff., surge free, Ri = <250 Ohm, 12...20 mA ⇒ P -> A < 3.6 mA = enable off, > 3.8 mA = enable on (acc. to NAMUR NE43)
Code G0	[mA]	+20...0...-20, ripple < 0.01 % eff., surge free, Ri = <250 Ohm, 0...+20 mA ⇒ P -> A
Differential input max.		
Codes F0, G0 & S0	[V]	30 for terminal D and E against PE (terminal G) 11 for terminal D and E against 0V (terminal B)
Code W5	[V]	30 for terminal 4 and 5 against PE (terminal PE) 11 for terminal 4 and 5 against 0V (terminal 2)
Channel recall signal	[V]	0...2.5: off / 5...30: on / Ri = 100 kOhm
Adjustment ranges Min	[%]	0...50
Max	[%]	50...100
Ramp	[s]	0...32.5
Interface		RS 232, parametrizing connection 5pole
EMC		EN 61000-6-2, EN 61000-6-4
Central connection		
Codes F0, G0 & S0		6 + PE acc. to EN 175201-804
Code W5		11 + PE acc. to EN 175201-804
Wiring min.		
Codes F0, G0 & S0	[mm²]	7 x 1.0 (AWG16) overall braid shield
Code W5	[mm²]	11 x 1.0 (AWG16) overall braid shield
Wiring length max.		50

3

Flow characteristics
D1FB*0 external electronics
at Δp = 5 bar per metering edge
Spool type E01/02/03, B31/32

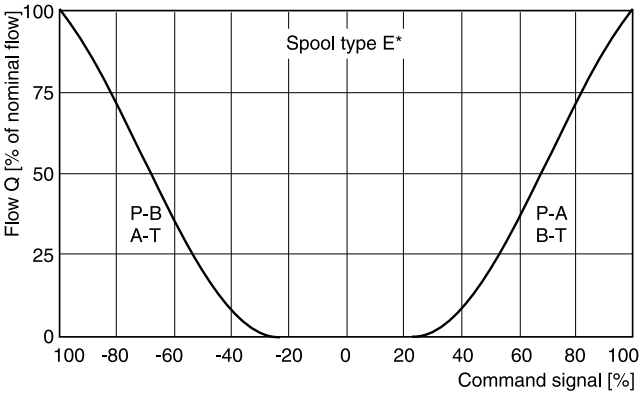

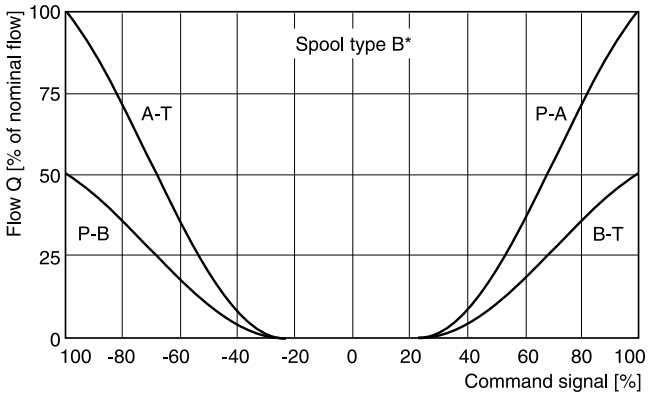

D1FB*0 OBE
(set to opening point 10 %)
at Δp = 5 bar per metering edge
Spool type E01/02/03, B31/32

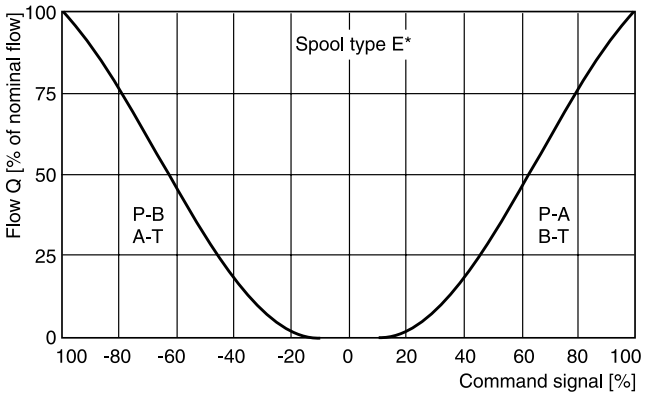

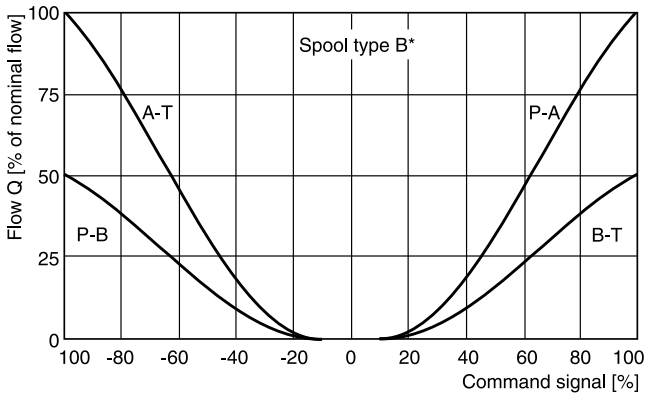

Functional limits
at 25 %, 50 %, 75 % and 100 % command signal (symmetric flow)

At asymmetric flow a reduced flow limit has to be considered.

Spool type E01H

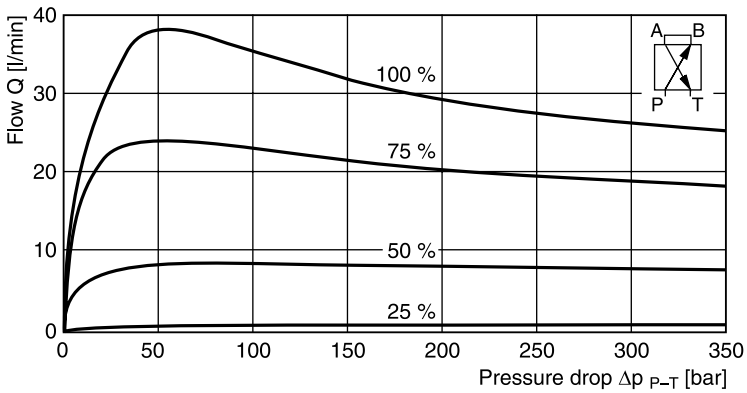

All characteristic curves measured with HLP46 at 50 °C.

Flow characteristics

D1FB*3 external electronics

at Δp = 5 bar per metering edge
Spool type E01/02/03, B31/32

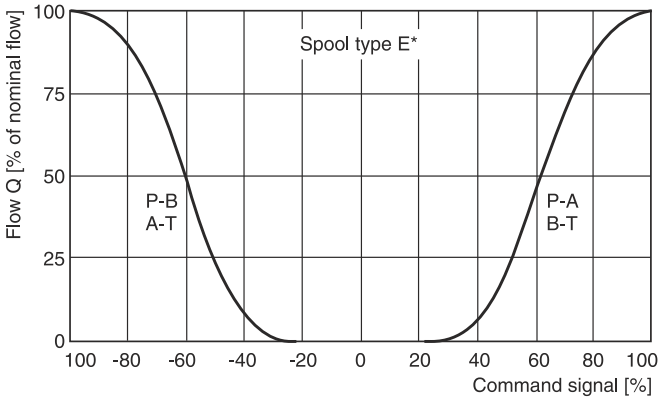

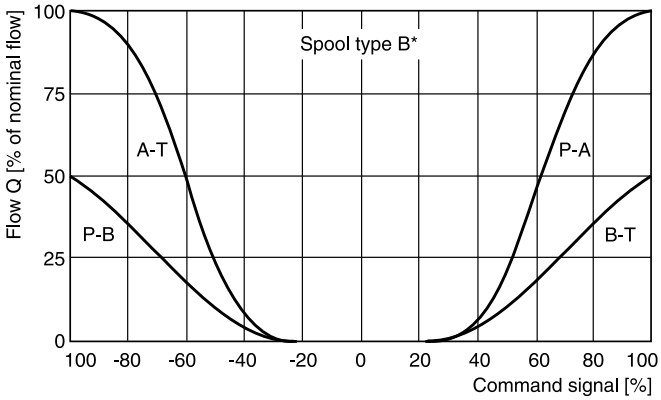

D1FB*3 OBE

(set to opening point 10 %)

at Δp = 5 bar per metering edge
Spool type E01/02

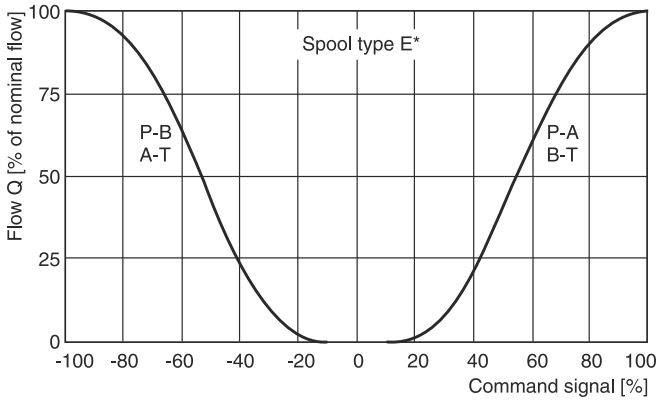

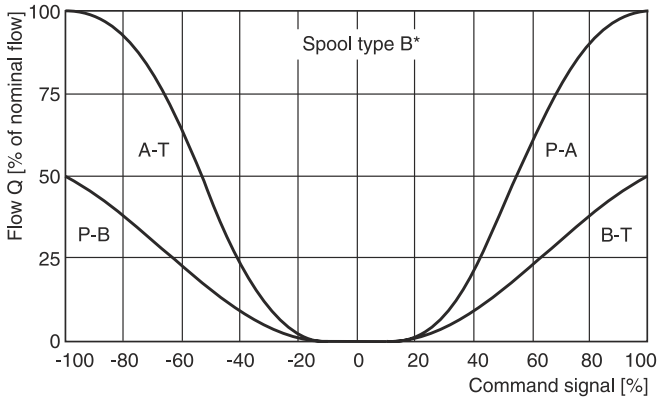

Functional limits

at 25 %, 50 %, 75 % and 100 % command signal (symmetric flow)

At asymmetric flow a reduced flow limit has to be considered.

Spool type E01K

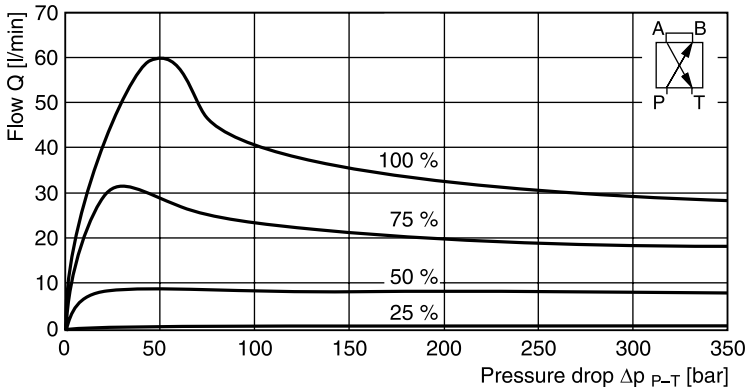

All characteristic curves measured with HLP46 at 50 °C.

3

Code F0
6 + PE acc. to EN 175201-804

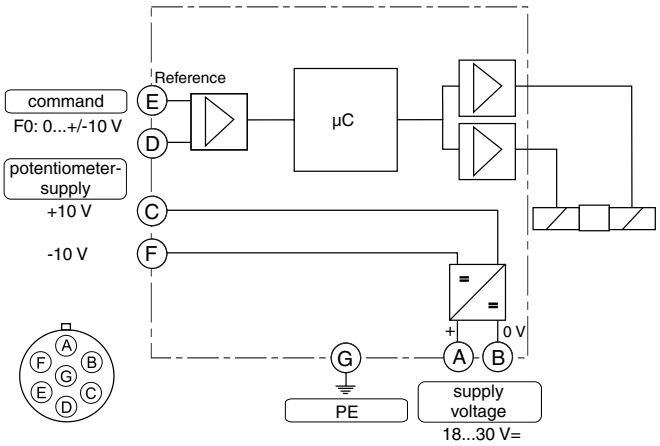

Code G0, S0
6 + PE acc. to EN 175201-804

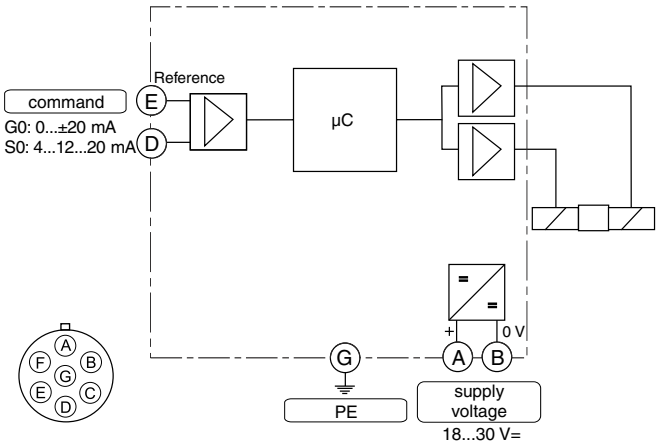

Code W5
11 + PE acc. to EN 175201-804

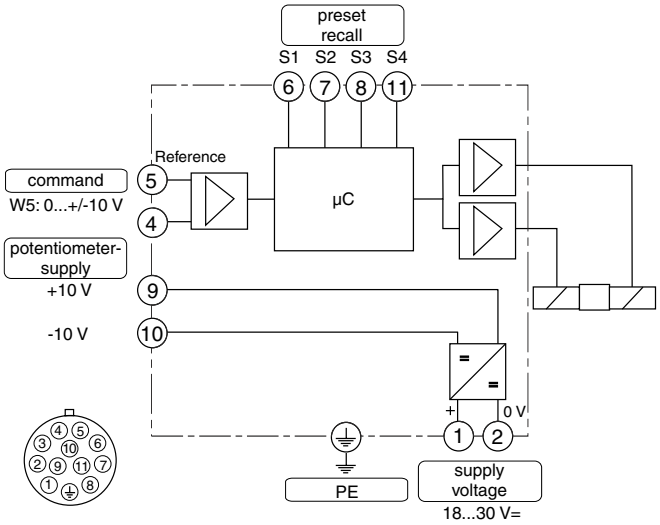

ProPxD interface program

The ProPxD software permits comfortable parameter setting for the module electronics. Via the clearly arranged entry mask the parameters can be noticed and modified. Storage of complete parameter sets is possible as well as printout or record as a text file for further documentation. Stored parameter sets may be loaded anytime and transmitted to other valves. Inside the electronics a non-volatile memory stores the data with the option for recalling or modification.

The PC software can be downloaded free of charge at www.parker.com/isde – see page “Support" or directly at www.parker.com/propxd.

Features

- Comfortable editing of all parameters
- Depiction and documentation of parameter sets
- Storage and loading of optimized parameter adjustments
- Executable with all actual Windows® operating systems from Windows® XP upwards
- Plain communication between PC and electronics via serial interface RS232C

The parametrizing cable may be ordered under item no. 40982923.

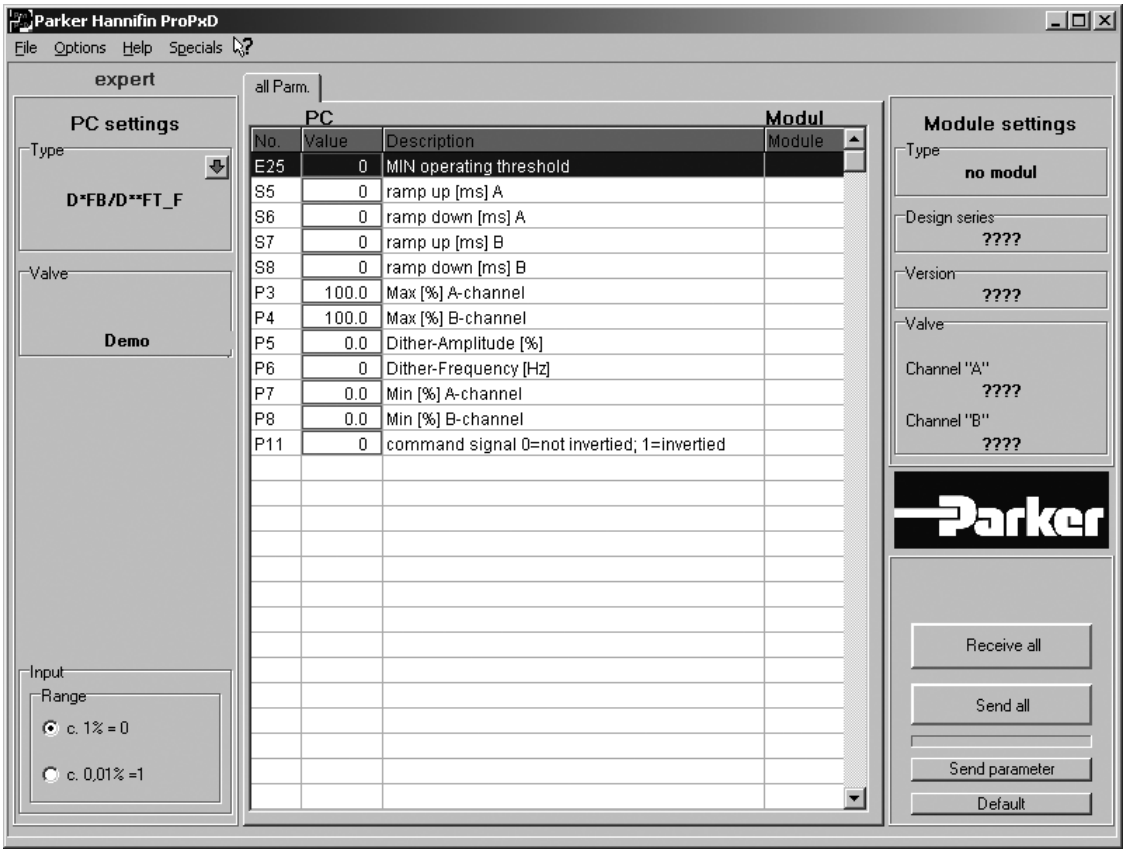

3

D1FB*C

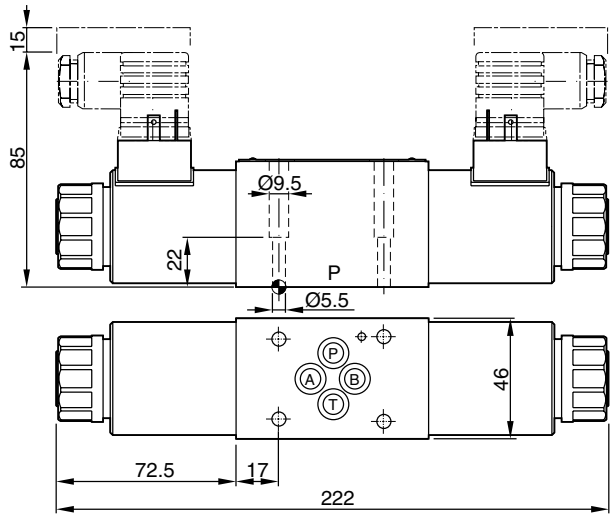

D1FB*E

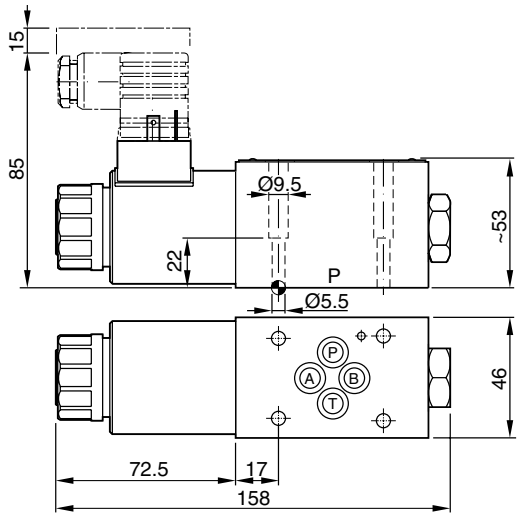

D1FB*K

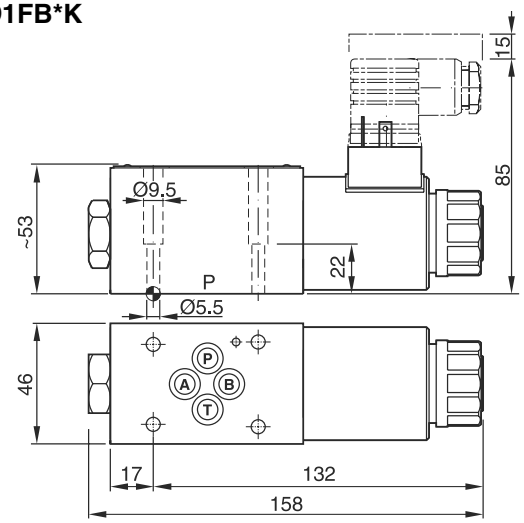

D1FB*C*0 with DT04-2P "Deutsch" connector
(only C style shown)

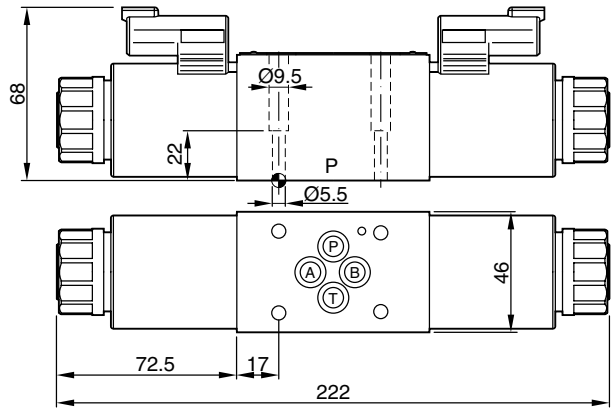

D1FB*C*3

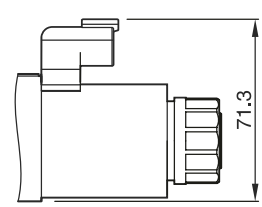

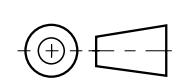

Surface finish	Kit			Kit NBR
R_{max}6.3 0.01/100	BK375	4x M5x30 ISO 4762-12.9	7.6 Nm ±15 %	SK-D1FB

D1FB*C OBE

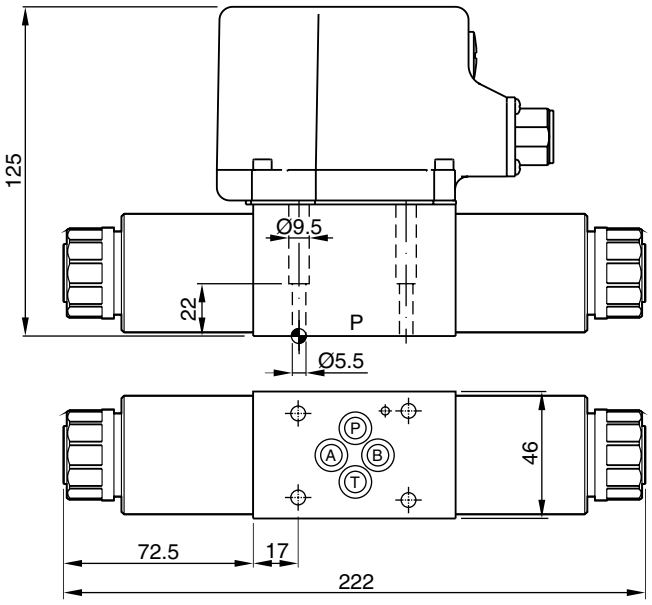

D1FB*E OBE

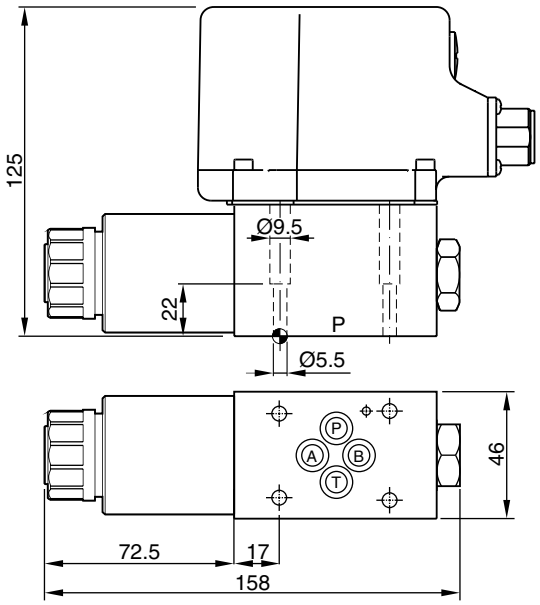

D1FB*K OBE

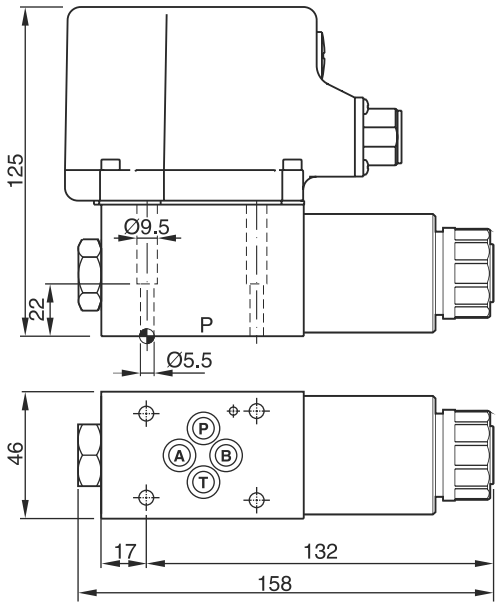

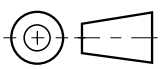

Surface finish	Kit			Kit NBR
$\sqrt{R_{max}6.3}$ 0.01/100	BK375	4x M5x30 ISO 4762-12.9	7.6 Nm ±15 %	SK-D1FB

The proportional directional valves D3FB (NG10) are available with and without onboard electronics (OBE).

D3FB OBE

The digital onboard electronics is situated in a robust metal housing, which allows the usage under rough environmental conditions.

The nominal values are factory set. The cable connection to a serial RS232 interface is available as accessory.

D3FB for external electronics

The parameters can be saved, changed and duplicated in combination with the digital power amplifier PWD00A-400.

The valve parameters can be edited with the common ProPxD software for both versions.

The D3FB valves can be ordered with spool/sleeve design (D3FB*0) for maximum precision as well as spool/body design (D3FB*3) for high nominal flow - see functional limit curves for maximum flow capability.

Features

- Spool/sleeve and spool/body
- 3 command options for D3FB OBE: +/- 10 V, 4…20 mA, +/- 20 mA
- High repeatability from valve to valve
- Low hysteresis
- Manual override
- Digital onboard electronics



D3FB



D3FB OBE

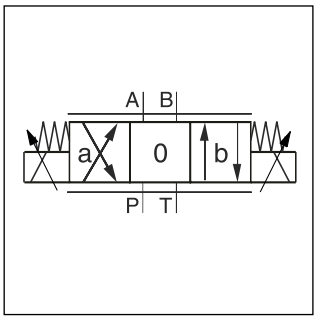

D3FB

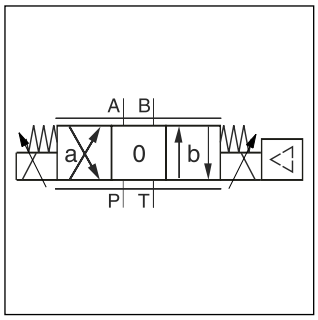

D3FB OBE

CE

D3FB*0 OBE
Spool/sleeve design

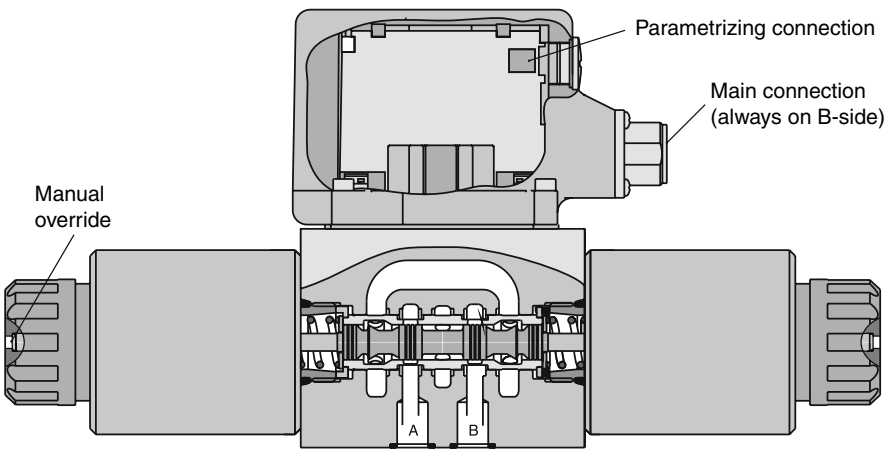

D3FB*3 OBE
Spool/body design

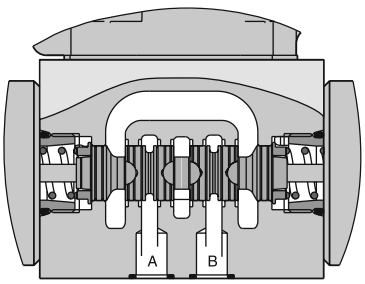

D3FB

D	3	F	B			0	N		W		
DC valve	**Size DIN NG10 CETOP 05 NFPA D05**	**Proportional control**	**Standard dynamics standard repeatability**	**Spool type**	**Spool position**		**Seal NBR** (other seal compounds on request)	**Solenoid**	**Connector as per EN 175301-803 without plug** [1]	**Design**	**Design series** (not required for ordering)

D3FB*0: Spool/sleeve design		
Code	Spool type	Flow [l/min] at Δp 5 bar per metering edge
Overlap		
E01M **E01S**	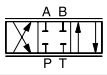	**40** **60**
E02M **E02S**	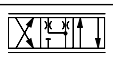	**40** **60**
B31M **B31S**	$Q_B = Q_A/2$ 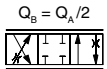	**40 / 20** **60 / 30**
B32M **B32S**	$Q_B = Q_A/2$ 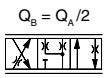	**40 / 20** **60 / 30**

D3FB*3: Spool/body design		
Code	Spool type	Flow [l/min] at Δp 5 bar per metering edge
Overlap		
E01M **E01S** **E01U**	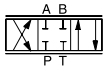	**40** **60** **80**
E02M **E02S** **E02U**		**40** **60** **80**
B31M **B31S** **B31U**	$Q_B = Q_A/2$ 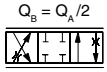	**40 / 20** **60 / 30** **80 / 40**
B32M **B32S** **B32U**	$Q_B = Q_A/2$ 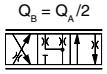	**40 / 20** **60 / 30** **80 / 40**

Code	Design
0	**Spool/sleeve design**
3	**Spool/body design**

D3FB*0: Spool/sleeve design	
Code	Solenoid
K	**12 V / 2.95 A**

D3FB*3: Spool/body design	
Code	Solenoid
K	**12 V / 2.95 A**
J	**24 V / 1.5 A**

Code	Design
C	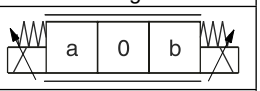
E	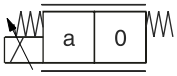
K	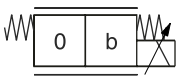

Short delivery time for all variations

For regenerative and hybrid function refer solution with sandwich and adaptor plates "A10-1664 / A10-1665L / H10-1662 / H10-1666L" in chapter 12.

[1] Please order connector separately, see chapter 3 accessories.

D3FB OBE (with onboard electronics)

D	3	F	B			0	N				
Directional control valve	**Size DIN NG10 CETOP 05 NFPA D05**	**Proportional control**	**Standard dynamics standard repeatability**	**Spool type**	**Spool position**		**Seals NBR** (other seal compounds on request)	**Input signal**	**Options**	**Design**	**Design series** (not required for ordering)

D3FB*0: Spool/sleeve design		
Code	Spool type	Flow [l/min] at Δp 5 bar per metering edge
Overlap		
E01M **E01S**	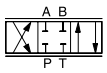	**40** **60**
E02M **E02S**	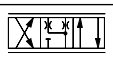	**40** **60**
B31M **B31S**	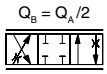	**40 / 20** **60 / 30**
B32M **B32S**	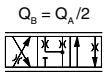	**40 / 20** **60 / 30**

D3FB*3: Spool/body design		
Code	Spool type	Flow [l/min] at Δp 5 bar per metering edge
Overlap		
E01M **E01S** **E01U**	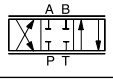	**40** **60** **80**
E02M **E02S** **E02U**		**40** **60** **80**
B31M **B31S** **B31U**	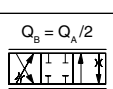	**40 / 20** **60 / 30** **80 / 40**
B32M **B32S** **B32U**	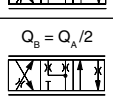	**40 / 20** **60 / 30** **80 / 40**

Code	Design
0	**Spool/sleeve design**
3	**Spool/body design**

Code	Input signal [1]	Function	Port	Options
F0	**0...+/-10 V**	**0...+10 V > P-A**	**6 + PE**	**Potentiometer supply**
G0	**0...+/-20 mA**	**0...+20 mA > P-A**	**6 + PE**	**—**
S0	**4...20 mA**	**12...20 mA > P-A**	**6 + PE**	**—**
W5 [2]	**0...+/-10 V** **4...20 mA**	**0...+10 V > P-A** **12...20 mA > P-A**	**11 + PE**	**Command channel & potentiometer supply**

Code	Design
C	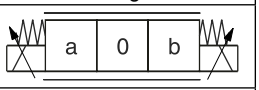
E	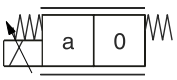
K	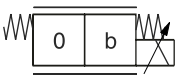

Short delivery time for all variations

For regenerative and hybrid function refer solution with sandwich and adaptor plates "A10-1664 / A10-1665L / H10-1662 / H10-1666L" in chapter 12.
Please order connector separately, see chapter 3 accessories.
Parametrizing cable OBE → RS232: Item no. 40982923

[1] Single solenoid always 0...+10 V respectively 4...20 mA.

[2] Factory set ±10 V on delivery.

General			
Design		Direct operated proportional DC valve	
Actuation		Proportional solenoid	
Size		NG10 / CETOP 05 / NFPA D05	
Mounting interface		DIN 24340 / ISO 4401 / CETOP RP121 / NFPA	
Mounting position		unrestricted	
Ambient temperature	[°C]	-20...+60	
$MTTF_D$ value [1]	[years]	150	
Weight (OBE)	[kg]	6.5 (7.2)	
Hydraulic			
Max. operating pressure	[bar]	Ports P, A, B 350, T 210	
Max. pressure drop PABT / PBAT	[bar]	350	
Fluid		Hydraulic oil according to DIN 51524 ... 535, other on request	
Fluid temperature	[°C]	-25...+60	
Viscosity permitted recommended	[cSt] / [mm²/s] [cSt] / [mm²/s]	20...400 30...80	
Filtration		ISO 4406; 18/16/13	
		D3FB*0 (Spool/sleeve)	**D3FB*3 (Spool/body)**
Nominal flow at Δp=5 bar per control edge [2]	[l/min]	40 / 60	40 / 60 / 80
Leakage at 100 bar	[ml/min]	<100	<100
Opening point (OBE)	[%]	see flow characteristics (set to 10 command signal)	
Static / Dynamic			
Step response at 100 % step	[ms]	40	
Hysteresis	[%]	<4	<5
Temperature drift solenoid current	[%/K]	<0.02	
Electrical characteristics			
Duty ratio	[%]	100 ED; CAUTION: Coil temperature up to 150 °C possible	
Protection class		IP65 in accordance with EN 60529 (with correctly mounted plug-in connector)	
Solenoid		**Code "K"**	**Code "J"**
Supply voltage	[V]	12	24
Current consumption	[A]	2.95	1.5
Resistance	[Ohm]	3.84	16.25
Solenoid connection		Connector as per EN 175301-803	
Wiring min.	[mm²]	3 x 1.5 recommended	
Wiring lenght max.	[m]	50 recommended	

[1] If valves with onboard electronics are used in safety-related parts of control systems, in case the safety function is requested, the valve electronics voltage supply is to be switched off by a suitable switching element with sufficient reliability.

[2] Flow rate for different Δp per control edge: $Q_x = Q_{Nom.} \cdot \sqrt{\frac{\Delta p_x}{\Delta p_{Nom.}}}$

3

Electrical characteristics OBE		
Vibration resistance	[g]	10 Sinus 5...2000 Hz acc. IEC 68-2-6 10 (RMS) Random noise 20...2000 Hz acc. IEC 68-2-36 15 Shock acc. IEC 68-2-27
Duty ratio	[%]	100 ED; CAUTION: coil temperatures up to 150 °C possible
Protection class		IP65 in accordance with EN 60529 (with correctly mounted plug-in connector)
Supply voltage/ripple DC	[V]	18...30, ripple < 5 % eff., surge free
Current consumption max.	[A]	3.5
Pre fusing medium lag	[A]	4.0
Input signal		
Codes F0 & W5 voltage	[V]	+10...0...-10, ripple < 0.01 % eff., surge free, Ri = 100 kOhm, 0...+10 V ⇒ P -> A
Codes S0 & W5 current	[mA]	4...12...20, ripple < 0.01 % eff., surge free, Ri = <250 Ohm, 12...20 mA ⇒ P -> A < 3.6 mA = enable off, > 3.8 mA = enable on (acc. to NAMUR NE43)
Code G0	[mA]	+20...0...-20, ripple < 0.01 % eff., surge free, Ri = <250 Ohm, 0...+20 mA ⇒ P -> A
Differential input max.		
Codes F0, G0 & S0	[V]	30 for terminal D and E against PE (terminal G) 11 for terminal D and E against 0V (terminal B)
Code W5	[V]	30 for terminal 4 and 5 against PE (terminal PE) 11 for terminal 4 and 5 against 0V (terminal 2)
Channel recall signal	[V]	0...2.5: off / 5...30: on / Ri = 100 kOhm
Adjustment ranges Min	[%]	0...50
Max	[%]	50...100
Ramp	[s]	0...32.5
Interface		RS 232, parametrizing connection 5pole
EMC		EN 61000-6-2, EN 61000-6-4
Central connection		
Codes F0, G0 & S0		6 + PE acc. to EN 175201-804
Code W5		11 + PE acc. to EN 175201-804
Wiring min.		
Codes F0, G0 & S0	[mm²]	7 x 1.0 (AWG16) overall braid shield
Code W5	[mm²]	11 x 1.0 (AWG16) overall braid shield
Wiring length max.		50

Flow characteristics
D3FB external electronics
at Δp = 5 bar per metering edge
Spool type E01/02, B31/32

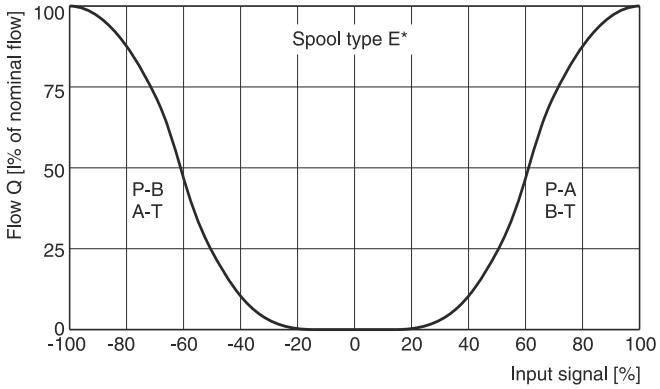

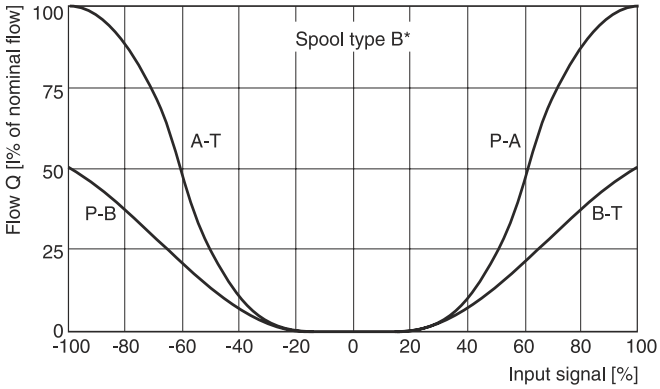

D3FB OBE
(set to opening point 10 %)
at Δp = 5 bar per metering edge
Spool type E01/02, B31/32

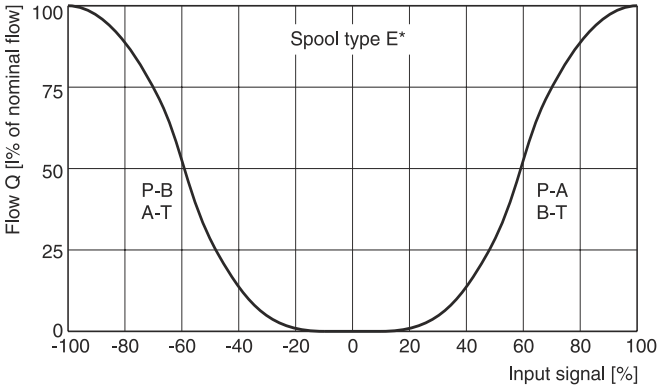

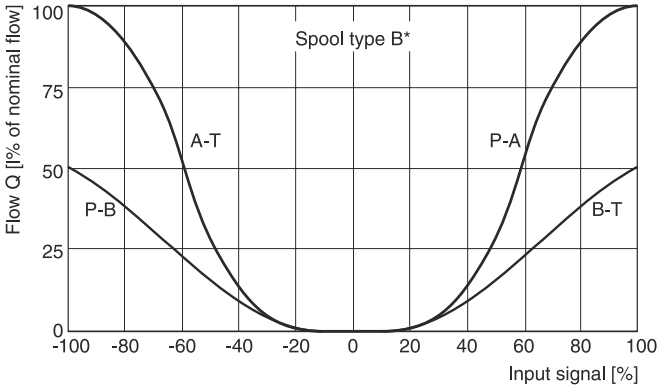

Functional limits
100 % command signal (symmetric flow). At asymmetric flow a reduced flow limit has to be considered.

D3FB*0

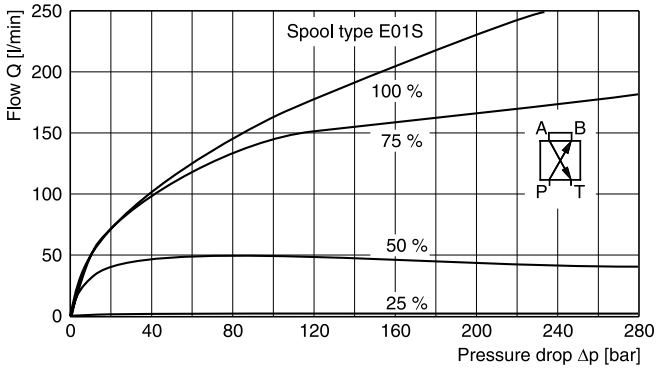

D3FB*3

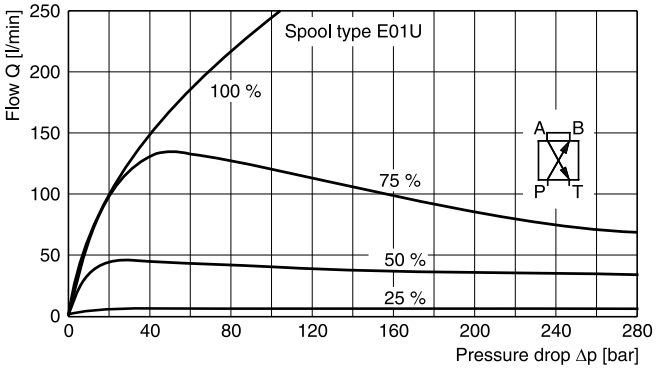

All characteristic curves measured with HLP46 at 50 °C.

Code F0
6 + PE acc. to EN 175201-804

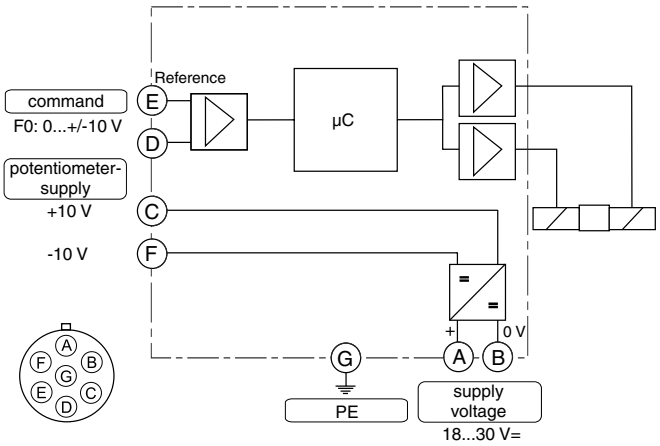

Code G0, S0
6 + PE acc. to EN 175201-804

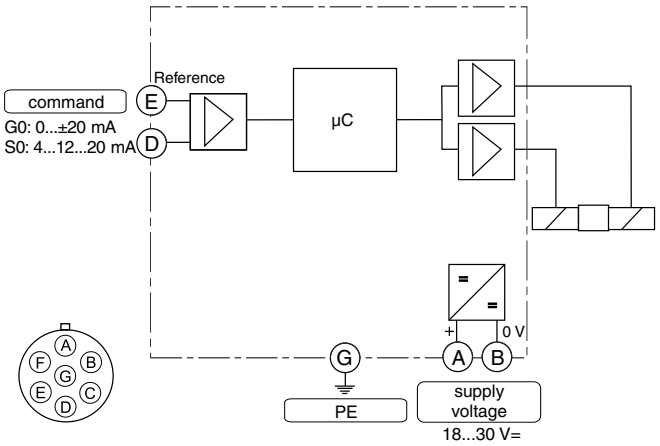

Code W5
11 + PE acc. to EN 175201-804

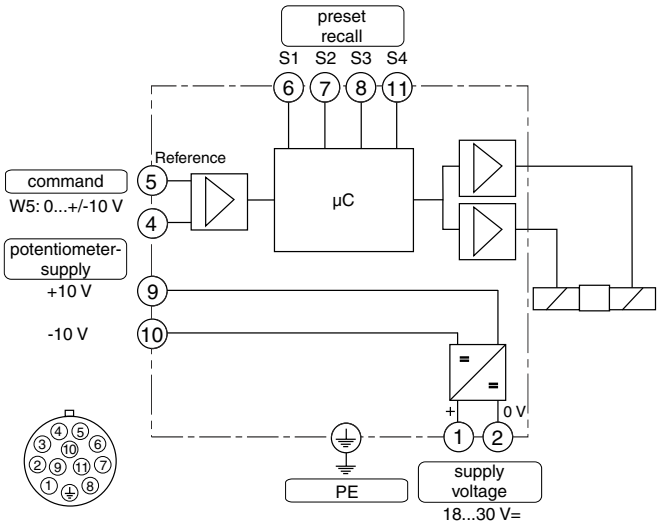

ProPxD interface program

The ProPxD software permits comfortable parameter setting for the module electronics. Via the clearly arranged entry mask the parameters can be noticed and modified. Storage of complete parameter sets is possible as well as printout or record as a text file for further documentation. Stored parameter sets may be loaded anytime and transmitted to other valves. Inside the electronics a non-volatile memory stores the data with the option for recalling or modification.

The PC software can be downloaded free of charge at www.parker.com/isde – see page “Support" or directly at www.parker.com/propxd.

Features

- Comfortable editing of all parameters
- Depiction and documentation of parameter sets
- Storage and loading of optimized parameter adjustments
- Executable with all actual Windows® operating systems from Windows® XP upwards
- Plain communication between PC and electronics via serial interface RS232C

The parametrizing cable may be ordered under item no. 40982923.

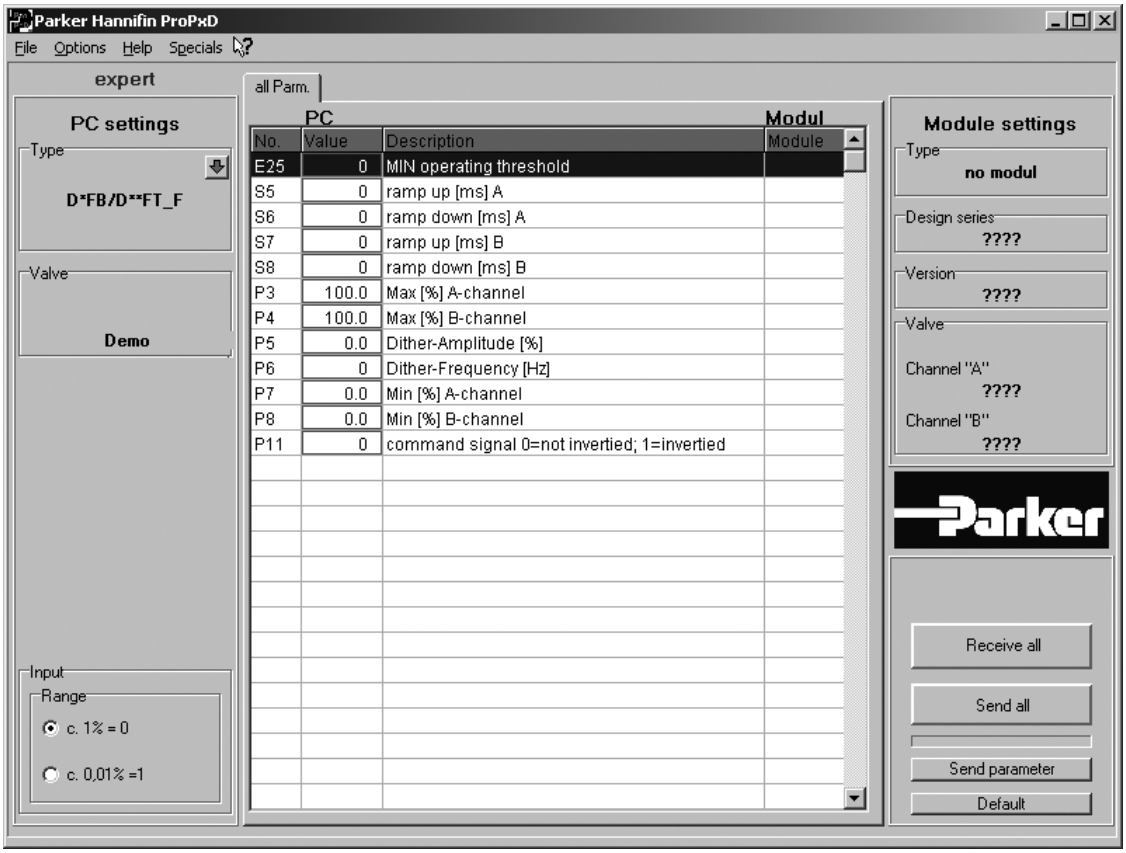

3

D3FB*C

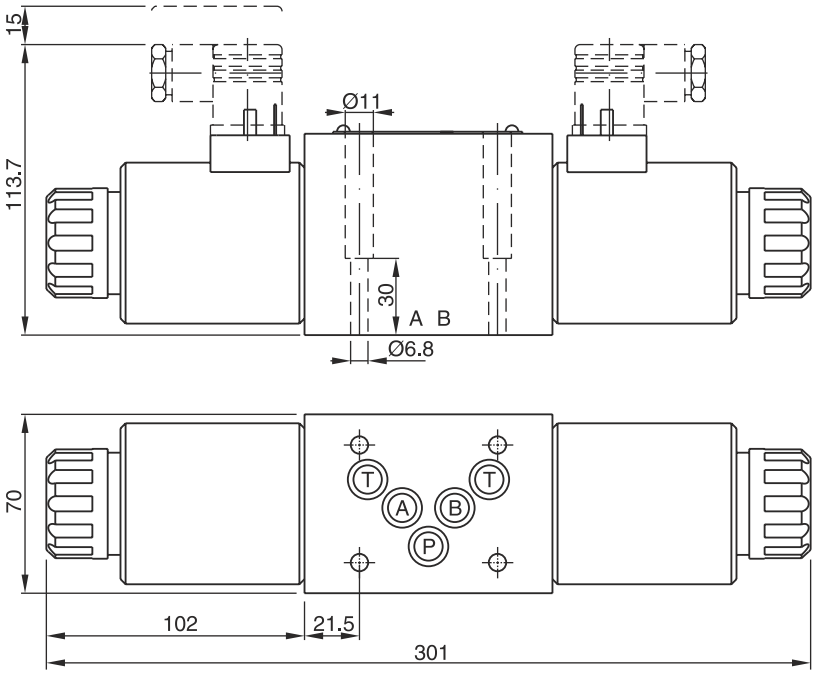

D3FB*E

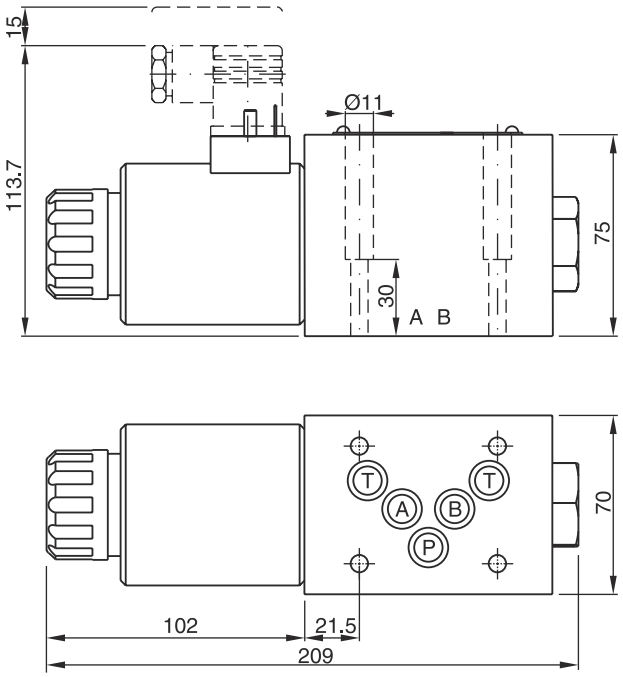

D3FB*K

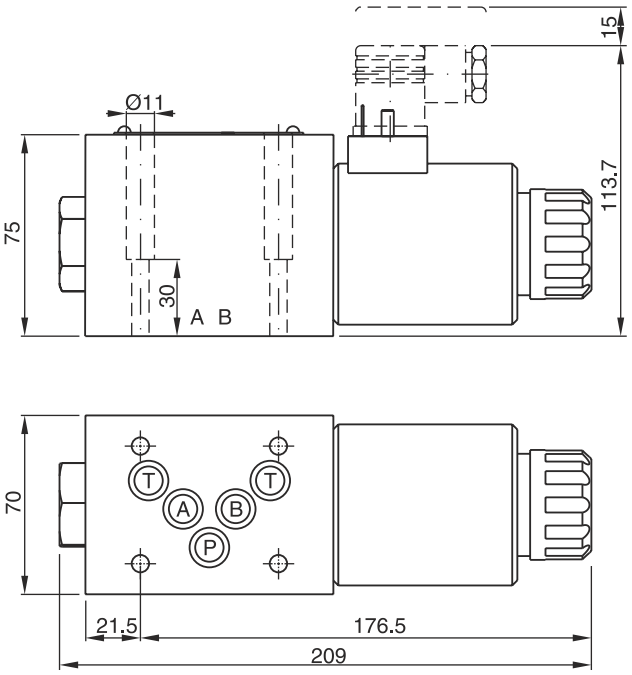

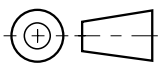

Surface finish	Kit			Kit NBR
R_{max}6.3 ⏥ 0.01/100	BK385	4x M6x40 ISO 4762-12.9	13.2 Nm ±15 %	SK-D3FB

D3FB*C OBE

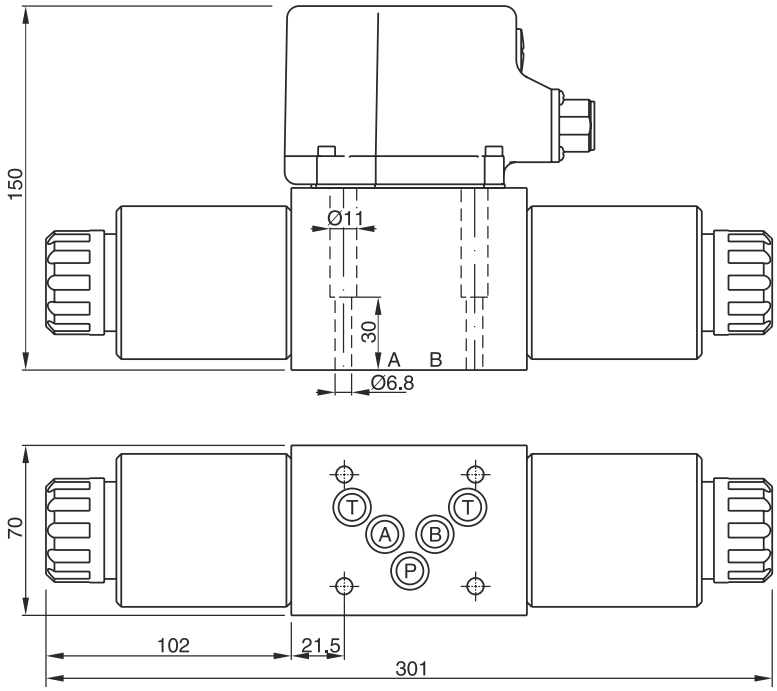

D3FB*E OBE

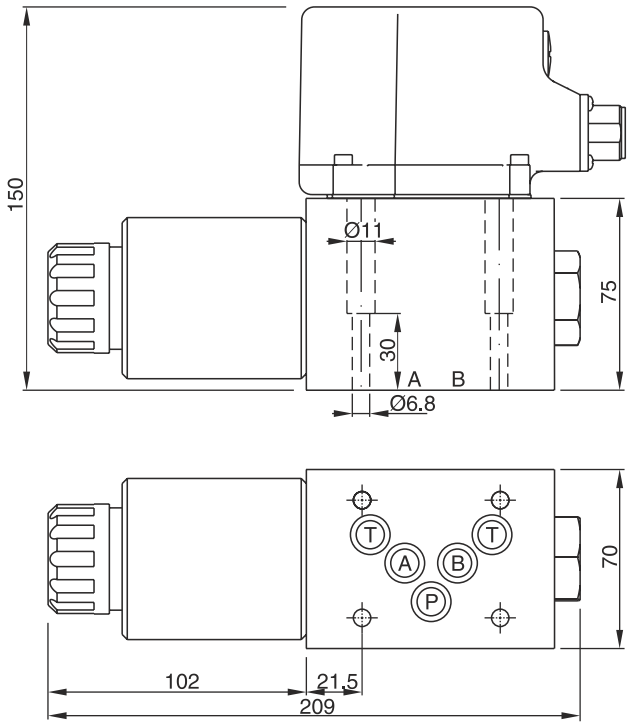

D3FB*K OBE

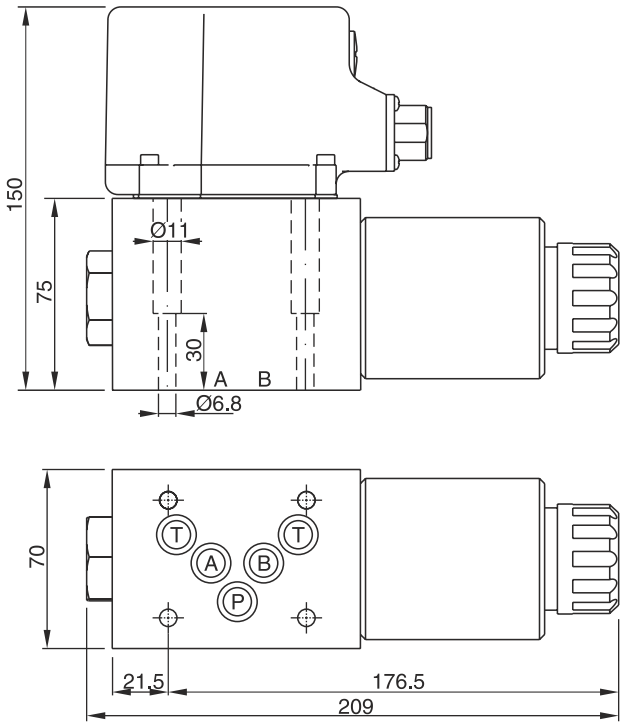

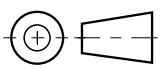

Surface finish	Kit			Kit NBR
$\sqrt{R_{max}6.3}$ 0.01/100	BK385	4x M6x40 ISO 4762-12.9	13.2 Nm ±15 %	SK-D3FB

The pilot operated proportional directional valves D*1FB are available in 4 sizes:

D31FB - NG10 (CETOP 05)
D41FB - NG16 (CETOP 07)
D91FB - NG25 (CETOP 08)
D111FB - NG32 (CETOP 10)

The valves are available with and without onboard electronics (OBE).

3

D*1FB OBE

The digital onboard electronics is situated in a robust metal housing, which allows the usage under rough environmental conditions.

The nominal values are factory set. The cable connection to a serial RS232 interface is available as accessory.

D*1FB for external electronics

The parameters can be saved, changed and duplicated in combination with the digital power amplifier PWD00A-400.

The valve parameters can be edited with the common ProPxD software for both versions.

The D*1FB valves work with barometric feedback of the main stage to the pressure reducing pilot valve. The pilot control pressure of 25 bar allows high flow rates at maximum stability.

The innovative integrated regenerative function into the A-line (optional) allows energy saving circuits for differential cylinders. The hybrid version can be switched between regenerative mode and standard mode at any time.

Valves with explosion proof solenoids Ex e mb II see catalogue HY11-3343.

Download: www.parker.com/euro_hcd - see “Literature”



D91FB OBE

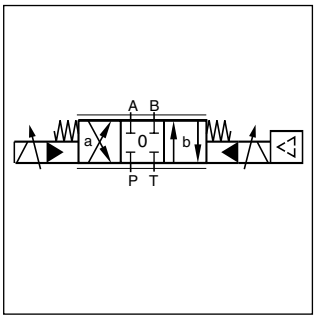

Standard D*1FB OBE

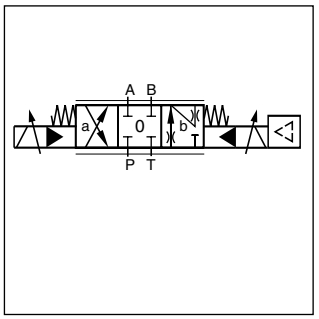

A-regeneration D*1FBR OBE

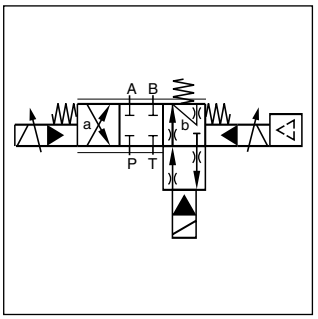

Hybrid D*1FBZ OBE

Technical Features

- Progressive flow characteristics for sensitive adjustment of flow rate
- High flow capacity
- Digital onboard electronics optional
- Centre position monitoring optional
- Energy saving A-regeneration optional
- Switchable hybrid version optional

D91FB OBE

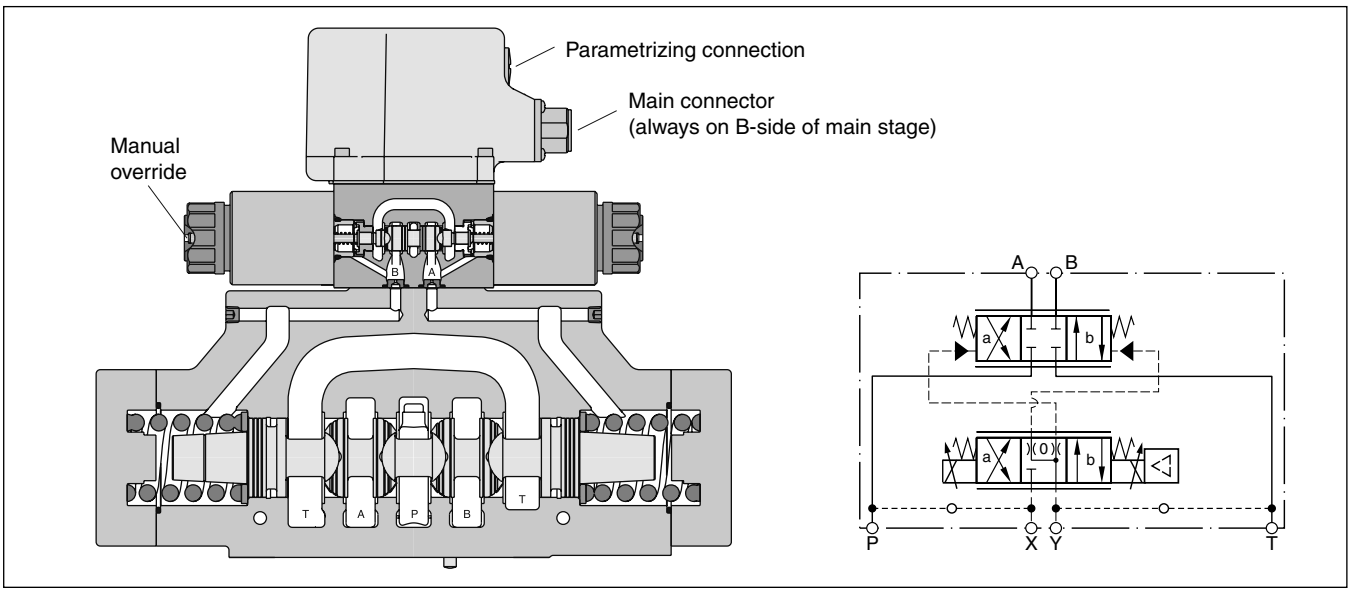

D*1FBR and D*1FBZ

Regenerative valve D*1FBR

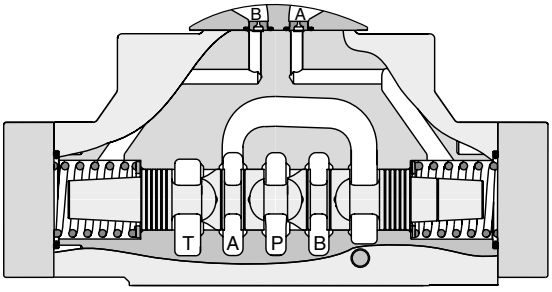

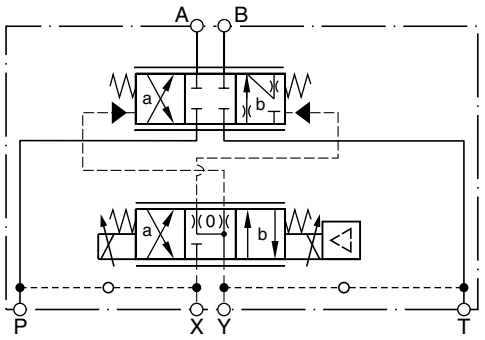

Hybrid valve D*1FBZ

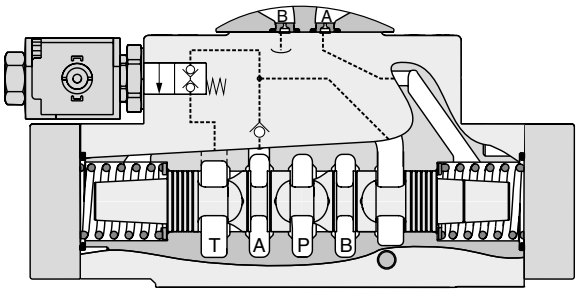

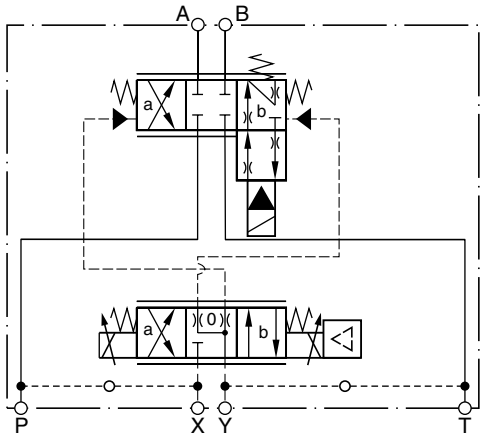

D*1FBR (regenerative valve)
Cylinder extending

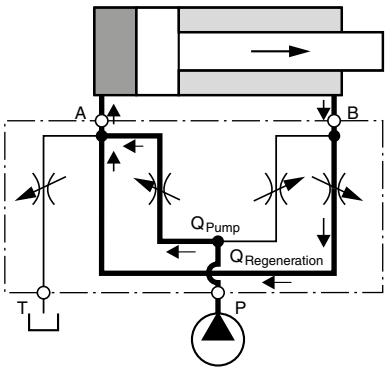

D*1FBZ (hybrid valve)
Cylinder extending
regenerative mode
(high speed)

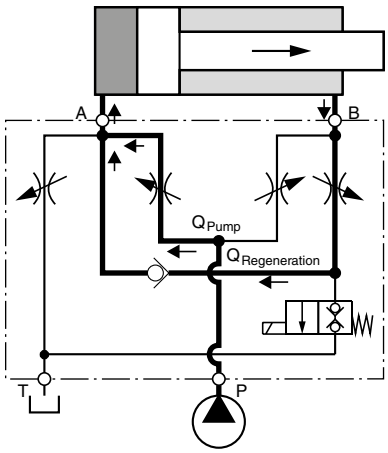

Cylinder extending
standard mode
(high force)

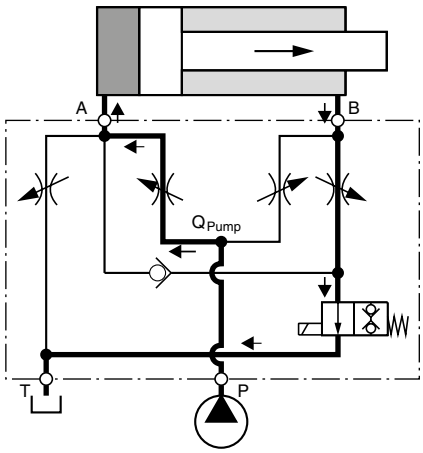

Flow rate in % of nominal flow

Size [1]	spool	Port					
		A-T	P-A	P-B	B-A (R-valve)	B-A (hybrid)	B-T (hybrid)
D41FBR/Z	31/32	100 %	50 %	100 %	50 %	45 %	20 %
D91FBR/Z	31/32	100 %	50 %	100 %	50 %	50 %	25 %
D111FBR/Z	31/32	100 %	50 %	100 %	50 %	50 %	20 %

[1] D31FB: For size NG10 please refer solution with sandwich- and adaptor plates "A10-1664 / A10-1665L / H10-1662 / H10-1666L" in chapter 12.

D*1FB

D		1	F	B									
Directional control valve	Size	NG06 pilot	Proportional control	Dynamics standard	Function	Flow	Spool position	Pilot connection	Seal	Solenoid description (other voltage on request)	Electronic options	Valve options	Design series (not required for ordering)

3

Code	Nominal size
3	**NG10 / CETOP 05**
4	**NG16 / CETOP 07**
9 [1]	**NG25 / CETOP 08**
11	**NG32 / CETOP 10**

Code	Valve options
0	**Standard for spool type B, E, R**
8 [9][10][11]	**Monitor switch**
L [8]	**Hybrid valve 24 V normally closed for spool type Z**

Code	Electronic options
W [6]	**EN 175301-803**
J [6][7]	**DT04-2P "Deutsch"**

Code	Solenoid voltage
J	**24 V/1,1A**
K	**12 V/2,5A**

Code	Seal
N	**NBR**
V	**FPM**

Code	Inlet	Drain
1	**Internal**	**External**
2	**External**	**External**
4	**Internal**	**Internal**
5	**External**	**Internal**

Code	Standard		NEW: Regenerative function [2]		NEW: Hybrid function [2][3]	
	Code	Spool type	Code	Spool type	Code	Spool type
	Overlap		Overlap		Overlap	
E01	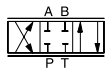					
E02	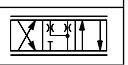					
B31	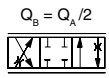		R31 		Z31 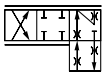	
B32	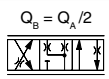		R32 		Z32 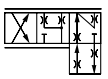	

Code	Flow [l/min] at Δp = 5 bar per metering edge			
	D31	D41	D91	D111
B	–	**100** [4][5]	–	–
C	**75** [5]	**130** [4][5]	–	–
D	**90** [5]	–	–	–
E	**120**	–	**250** [4][5]	–
F	–	**200**	-	–
H	–	–	**400**	–
L	–	–	–	**1000**

Short delivery time for all variations

Code	Design
C	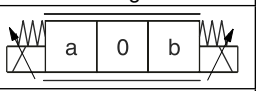
E [5]	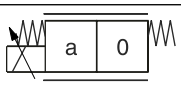
K [5]	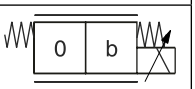

[1] With enlarged connections Ø 32 mm.
[2] For regenerative and hybrid function at D31FB (NG10) please refer solutions with sandwich - and adaptor plates "A10-1664 / A10-1665L / H10-1662 / H10-1666L" in chapter 12.

D31FB spool type: R31 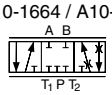 R32 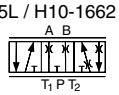

[3] Not for D31FB.
[4] Not for spool type B31 und B32.
[5] Not for regenerative and hybrid function.
[6] Please order plugs separately. See accessories.
[7] Not for hybrid function.
[8] See page "regenerative and hybrid function" (not for D31FB).
[9] Not for D111FBZ*.
[10] Monitor switch for hybrid valves: code 8 includes options of code L (24 V normally closed).
[11] Please order female connector M12x1 separately (see accessories , female connector M12x1 (order no.: 5004109).

D*1FB OBE

D		1	F	B								
Directional control valve	Size	NG06 pilot	Proportional control	Onboard electronics	Function	Flow	Spool position	Pilot connection	Seal	Command signal	Option	Valve options	Design series (not required for ordering)

Code	Nominal size
3	NG10 / CETOP 05
4	NG16 / CETOP 07
9 [1]	NG25 / CETOP 08
11	NG32 / CETOP 10

Standard		Regenerative function [2]		Hybrid function [2] [3]	
Code	Spool type	Code	Spool type	Code	Spool type
Overlap		Overlap		Overlap	
E01	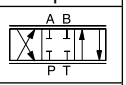				
E02					
B31	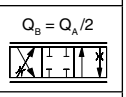	R31	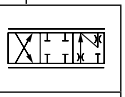	Z31	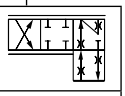
B32	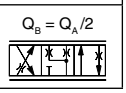	R32	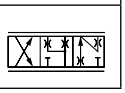	Z32	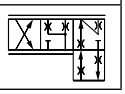

Code	Flow [l/min] at Δp = 5 bar per metering edge			
	D31	D41	D91	D111
B	–	100 [4] [5]	–	–
C	75 [5]	130 [4] [5]	–	–
D	90 [5]	–	–	–
E	120	–	250 [4] [5]	–
F	–	200	-	–
H	–	–	400	–
L	–	–	–	1000

Code	Command signal [7]	Function	Connection [6]
F0 [9]	0...±10 V	0...+10 V > P-B	6 + PE
G0 [8]	0...±20 mA	0...+20 mA > P-B	6 + PE
M0 [8] [9]	0...±10 V	0...+10 V > P-A	6 + PE
S0	4...20 mA	12...20 mA > P-A	6 + PE
W5 [8] [9]	0...±10 V 4...20 mA	0...+10 V > P-A 12...20 mA > P-A	11 + PE

Code	Valve options
0	Standard for spool type B, E, R
8 [11] [12] [13]	Monitor switch
L [10]	Hybrid valve 24V normally closed for spool type Z

Code	Seal
N	NBR
V	FPM

Code	Inlet	Drain
1	Internal	External
2	External	External
4	Internal	Internal
5	External	Internal

Code	Design
C	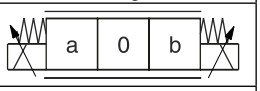
E [5]	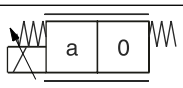
K [5]	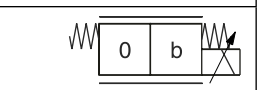

Parametrizing cable OBE → RS232, item no. 40982923

Short delivery time for all variations

[1] With enlarged connections Ø 32 mm.
[2] For regenerative and hybrid function at D31FB (NG10) please refer solutions with sandwich - and adaptor plates "A10-1664 / A10-1665L / H10-1662 / H10-1666L" in chapter 12.

D31FB spool type: R31 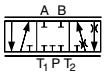 R32 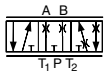

[3] Not for D31FB.
[4] Not for spool type B31 und B32.
[5] Not for regenerative and hybrid function.
[6] Please order plugs seperately, see accessories.
[7] For 1 solenoid 0...+10 V respectively 4...20 mA.
[8] Not for spool position E and K.
[9] F0, M0 potentiometer supply, W5 command channel & potentiometer supply.
[10] See page "regenerative and hybrid function" (not for D31FB).
[11] Not for D111FBZ*.
[12] Monitor switch for hybrid valves: code 8 includes options of code L (24 V normally closed).
[13] Please order female connector M12x1 separately (see accessories , female connector M12x1 (order no.: 5004109)

3

General					
Design		Pilot operated DC valve			
Actuation		Proportional solenoid			
Size		**NG10 (CETOP 05)**	**NG16 (CETOP 07)**	**NG25 (CETOP 08)**	**NG32 (CETOP 10)**
Mounting interface		DIN 24340 / ISO 4401 / CETOP RP121 / NFPA			
Mounting position		unrestricted			
Ambient temperature	[°C]	-20...+60			
$MTTF_D$ value [1]	[years]	75			
Weight (OBE)	[kg]	8.6 (9.3)	11.9 (12.6)	20.4 (21.1)	68 (68.7)
Hydraulic					
Max. operating pressure	[bar] [bar]	Pilot drain internal: P, A, B, X 350; T, Y 185 Pilot drain external: P, A, B, T, X 350; Y 185			
Fluid		Hydraulic oil according to DIN 51524 ... 535, other on request			
Fluid temperature	[°C]	-20...+60 (NBR: -25...+60)			
Viscosity permitted recommended	[cSt] / [mm²/s] [cSt] / [mm²/s]	20...400 30...80			
Filtration		ISO 4406; 18/16/13			
Nominal flow at Δp=5 bar per control edge [2]	[l/min]	75/90/120	130/200	250/400	1000
Leakage at 100 bar	[ml/min]	100	200	600	1000
Opening point (OBE)	[%]	see flow characteristics (set to 10 command signal)			
Pilot supply pressure	[bar] [bar] [bar]	min. 30 (+ T/Y pressure) max. 350 optimal dynamics at 50			
Pilot flow at 100 bar	[l/min]	<0.5	<1.2	<1.2	<1.2
Pilot flow, step response	[l/min]	2.0	1.9	4.5	18
Static / Dynamic					
Step response at 100 % step	[ms]	50	75	100	180
Hysteresis	[%]	<5			
Electrical characteristics					
Duty ratio	[%]	100 ED; CAUTION: Coil temperature up to 150 °C possible			
Protection class		Standard (as per EN175301-803) IP65 in accordance with EN 60529 DT04-2P "Deutsch" IP69K (with correctly mounted plug-in connector)			
Solenoid	Code	K		J	
Supply voltage	[V]	12		24	
Current consumption	[A]	2.5		1.1	
Resistance	[Ohm]	4.4		18.6	
Solenoid connection		Connector as per EN 175301-803 (code W), DT04-2P "Deutsch" connector (code J). Solenoid identification as per ISO 9461.			
Wiring min.	[mm²]	3x1.5 (AWG 16) overall braid shield			
Wiring length max.	[m]	50			

Electrical characteristics (hybrid option)				
Duty ratio	[%]	100 ED; CAUTION: Coil temperature up to 150 °C possible		
Protection class		IP 65 in accordance with EN 60529 (with correctly mounted plug-in connector)		
		D41	**D91**	**D111**
Supply voltage	[V]	24	24	24
Tolernace supply voltage	[%]	±10	±10	±10
Current consumption	[A]	1.21	0.96	1.29
Power consumption	[W]	29	23	31
Solenoid connection		Connector as per EN 175301-803		
Wiring min.	[mm²]	3 x 1.5 recommended		
Wiring length max.	[m]	50 recommended		

[1] If valves with onboard electronics are used in safety-related parts of control systems, in case the safety function is requested, the valve electronics voltage supply is to be switched off by a suitable switching element with sufficient reliability.

[2] Flow rate for different Δp per control edge: $Q_x = Q_{Nom.} \cdot \sqrt{\frac{\Delta p_x}{\Delta p_{Nom.}}}$

Electrical characteristics (D*1FB OBE)		
Vibration resistance	[g]	10 Sinus 5...2000 Hz acc. IEC 68-2-6 10 (RMS) Random noise 20...2000 Hz acc. IEC 68-2-36 15 Shock acc. IEC 68-2-27
Duty ratio	[%]	100 ED; CAUTION: coil temperature up to 150 °C possible
Protection class		IP65 in accordance with EN 60529 (with correctly mounted plug-in connector)
Supply voltage/ripple DC	[V]	18...30, ripple < 5 % eff., surge free
Current consumption max.	[A]	2.0
Pre fusing medium lag	[A]	2.5
Input signal		
Codes F0, M0, W5 voltage	[V]	+10...0...-10, ripple < 0.01 % eff., surge free, Ri = 100 kOhm
Code G0 current	[mA]	+20...0...-20, ripple < 0.01 % eff., surge free, Ri = <250 Ohm
Codes S0 & W5 current	[mA]	4...12...20, ripple < 0.01 % eff., surge free, Ri = <250 Ohm < 3.6 mA = enable off, > 3.8 mA = enable on (acc. to NAMUR NE43)
Differential input max.		
Codes F0, M0 G0 & S0	[V]	30 for terminal D and E against PE (terminal G)
	[V]	11 for terminal D and E against 0V (terminal B)
Code W5	[V]	30 for terminal 4 and 5 against PE (terminal PE)
	[V]	11 for terminal 4 and 5 against 0V (terminal 2)
Channel recall signal	[V]	0...2.5: off / 5...30: on / Ri = 100 kOhm
Adjustment ranges Min	[%]	0...50
Max	[%]	50...100
Ramp	[s]	0...32.5
Interface		RS 232, parametrizing connection 5pole
EMC		EN 61000-6-2, EN 61000-6-4
Central connection		
Codes F0, M0 G0 & S0		6 + PE acc. to EN 175201-804
Code W5		11 + PE acc. to EN 175201-804
Wiring min.		
Codes F0, M0 G0 & S0	[mm²]	7 x 1.0 (AWG16) overall braid shield
Code W5	[mm²]	11 x 1.0 (AWG16) overall braid shield
Wiring length max.		50

With electrical connections the protective conductor (PE ⏚) must be connected according to the relevant regulations.

D*1FB B/E Flow characteristics

at Δp = 5 bar per metering edge

Spool code **E01/02**

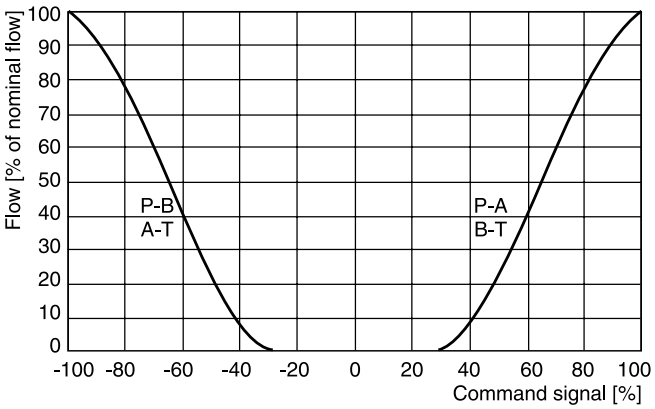

Spool code **B31/32***

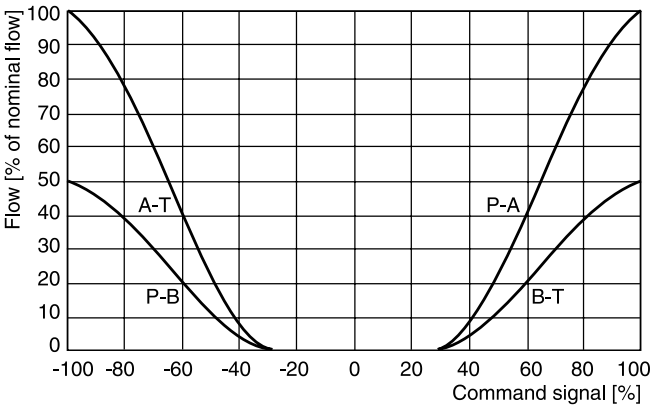

All characteristic curves measured with HLP46 at 50 °C.

3

D*1FB B/E OBE
Flow characteristics
(set to opening point 10 %)
at Δp = 5 bar per metering edge

Spool code **E01/02**

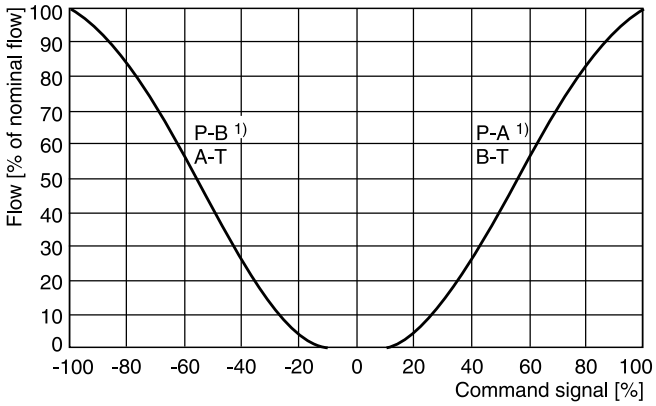

Spool code **B31/32**

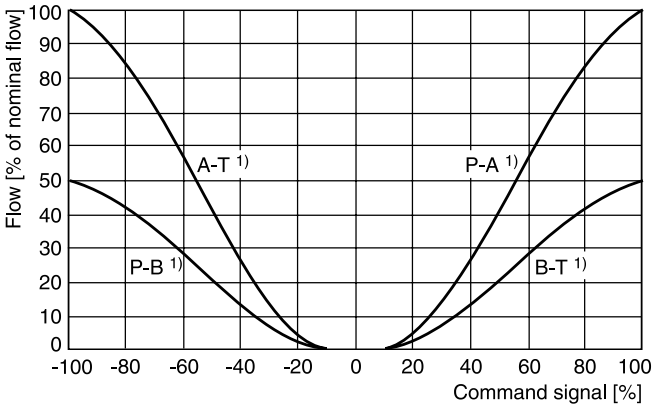

D*1FB R/Z (regenerative and hybrid)
D41FB R/Z
Spool code **R/Z31/32**

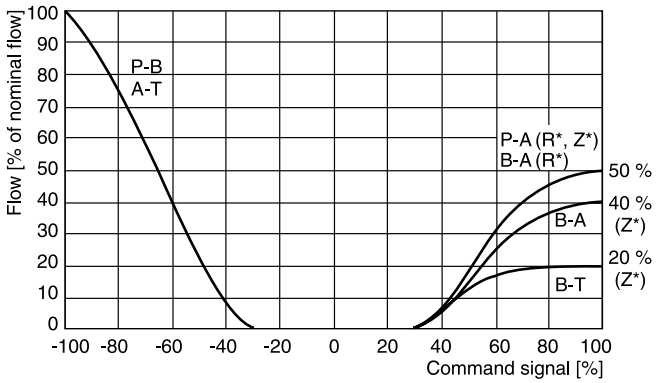

D91FB R/Z
Spool code **R/Z31/32**

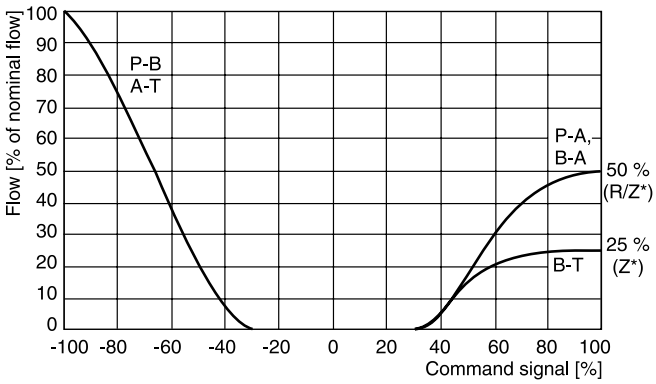

D41FB R/Z OBE
Spool code **R/Z31/32**
(set to opening point 10 %)

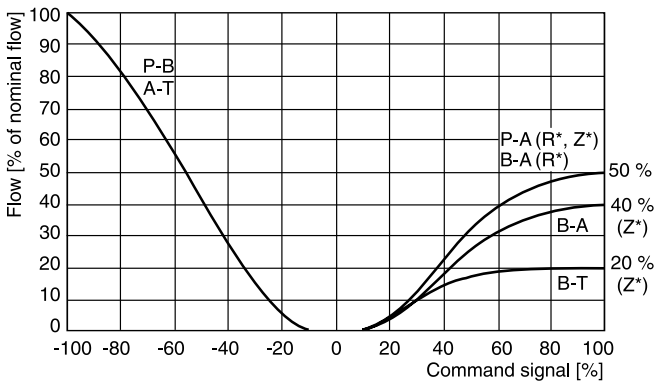

D91FB R/Z OBE
Spool code **R/Z31/32**

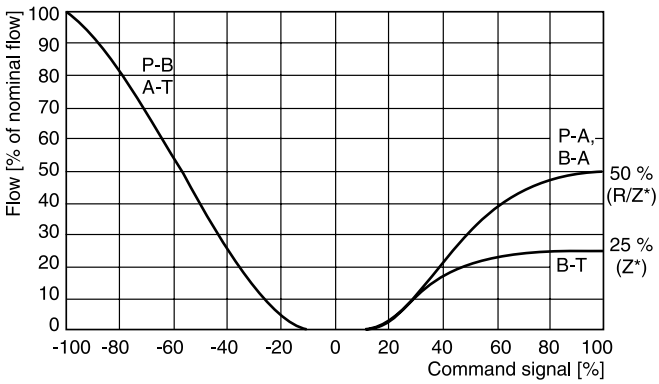

All characteristic curves measured with HLP46 at 50 °C.

[1] Flow direction depending on ordering code.

Electrical characteristics of position control M12x1 as per IEC 61076-2-101

Supply voltage	[VDC]	24
Tolernace supply voltage	[%]	±20
Ripple supply voltage	[%]	≤10
Polarity protection	[V]	300
Current consumption without load	[mA]	≤20
Switching hysteresis	[mm]	<0.06
Max. output current per channel, ohmic	[mA]	250
Ambient temperature	[°C]	-20 … +60
Protection		IP65 acc. EN 60529
CE conform		EN 61000-4-2 / EN 61000-4-4 / EN 61000-4-6 [1] / ENV 50140 / ENV 50204
Min. distance to next AC solenoid	[m]	0.1
Interface		M12x1 to IEC 61076-2-101

M12 pin assignment

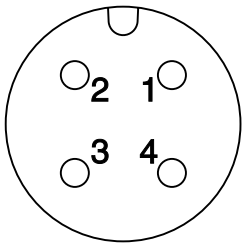

1 + U_S 19.2...28.8 V
2 Out B: normally open
3 0V
4 Out A: normally closed

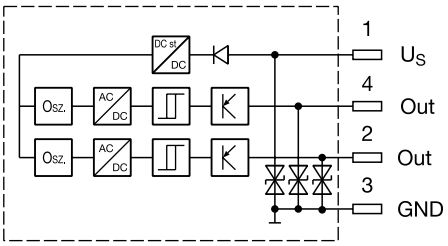

Outputs: Open collector

Signal	Output A (pin 4)	Output B (pin 2)
neutral	closed	closed
	open	closed
	closed	open

The neutral position is monitored. The signal changes after less than 10 % of the spool stroke.

Please order female connector M12x1 separately (see accessories, female connector M12x1 (order no.: 5004109).

[1] Only guaranted with screened cable and female connector

3

Code F0, M0
6 + PE acc. to EN 175201-804

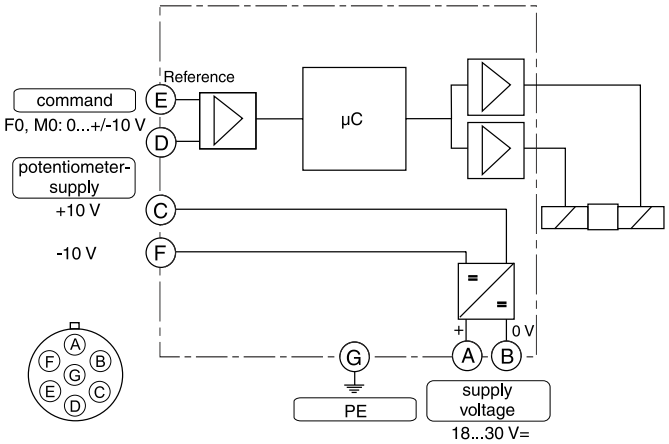

Code G0, S0
6 + PE acc. to EN 175201-804

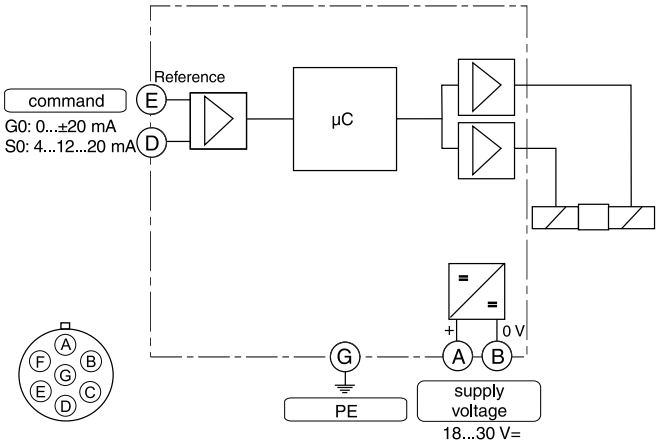

Code W5
11 + PE acc. to EN 175201-804

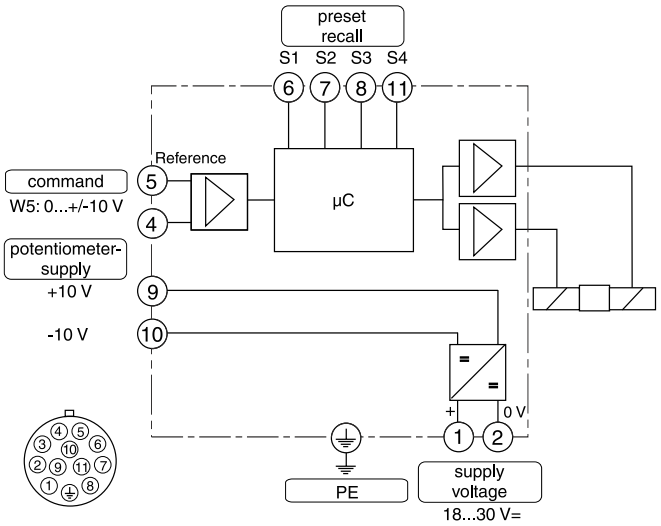

ProPxD interface program

The ProPxD software permits comfortable parameter setting for the module electronics. Via the clearly arranged entry mask the parameters can be noticed and modified. Storage of complete parameter sets is possible as well as printout or record as a text file for further documentation. Stored parameter sets may be loaded anytime and transmitted to other valves. Inside the electronics a non-volatile memory stores the data with the option for recalling or modification.

The PC software can be downloaded free of charge at www.parker.com/isde – see page “Support" or directly at www.parker.com/propxd.

Features

- Comfortable editing of all parameters
- Depiction and documentation of parameter sets
- Storage and loading of optimized parameter adjustments
- Executable with all actual Windows® operating systems from Windows® XP upwards
- Plain communication between PC and electronics via serial interface RS232C

The parametrizing cable may be ordered under item no. 40982923.

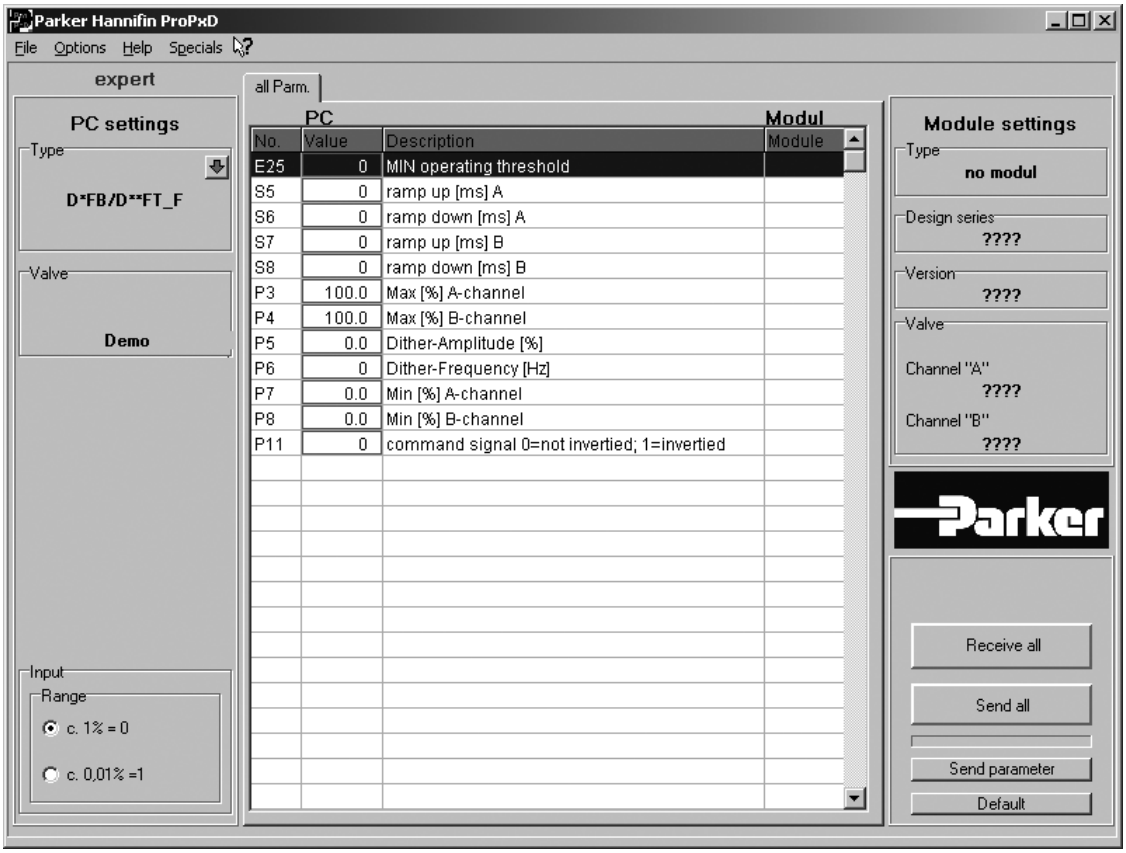

Pilot oil inlet (supply) and outlet (drain)

○ **open,** ● **closed**

Pilot oil Inlet	Drain	B	C
internal	external	○	●
external	external	●	●
internal	internal	○	○
external	internal	●	○

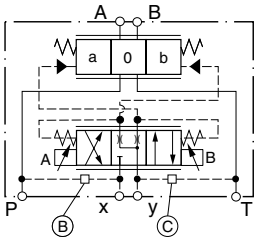

3

D31FBB/E

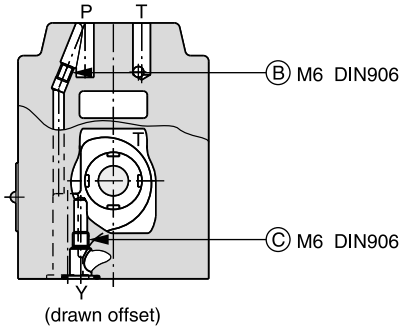

(drawn offset)

D31FBR

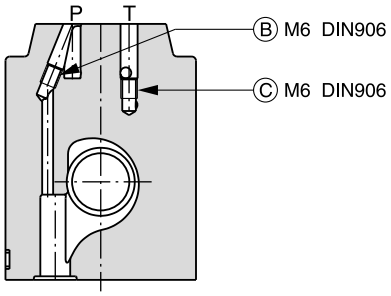

D41FBB/E

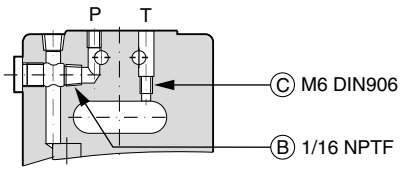

D41FBR

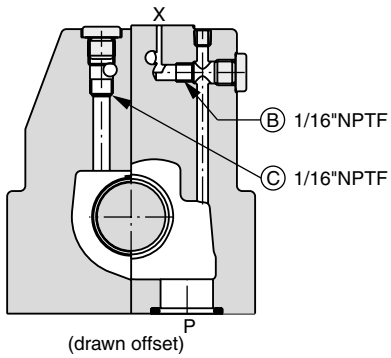

(drawn offset)

D41FBZ

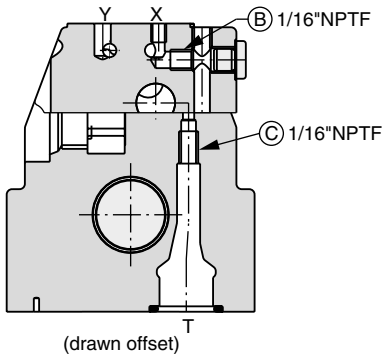

(drawn offset)

D91FBB/E

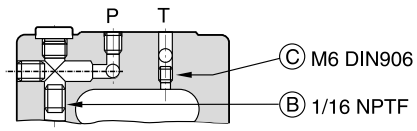

D91FBR

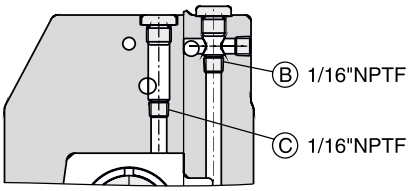

(drawn offset)

D91FBZ

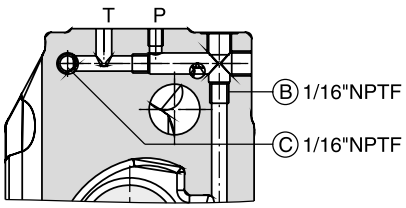

D111FBB/E

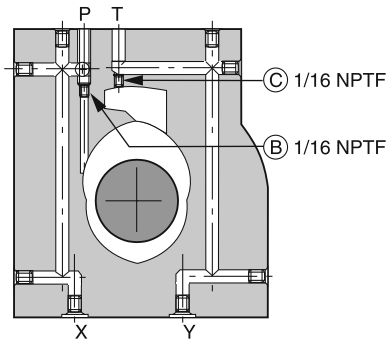

D111FBR

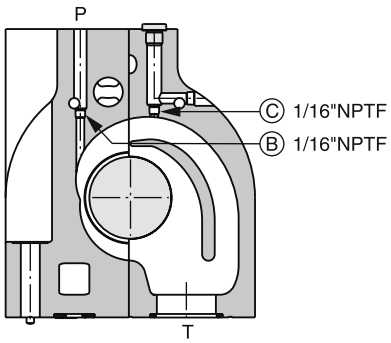

(drawn offset)

D111FBZ

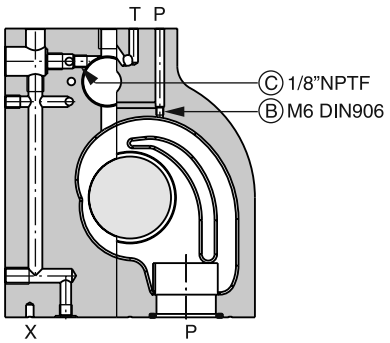

(drawn offset)

D31FB

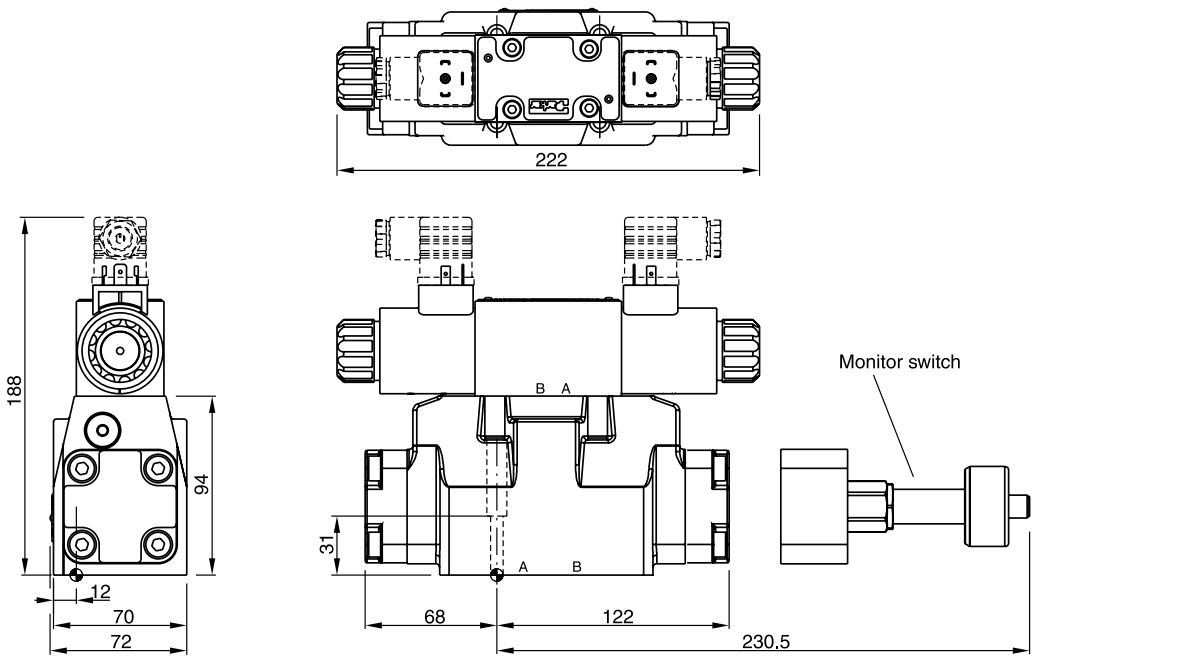

Regenerative and hybrid function with additional plate "H10-1666L / H10-1662 / A10-1664 / A10-1665L", see chapter 12.

Surface finish	Kit			Kit
$R_{max}6.3$ 0.01/100	BK385	4x M6x40 ISO 4762-12.9	13.2 Nm ±15 %	NBR: SK-D31FB FPM: SK-D31FB-V

D41FB

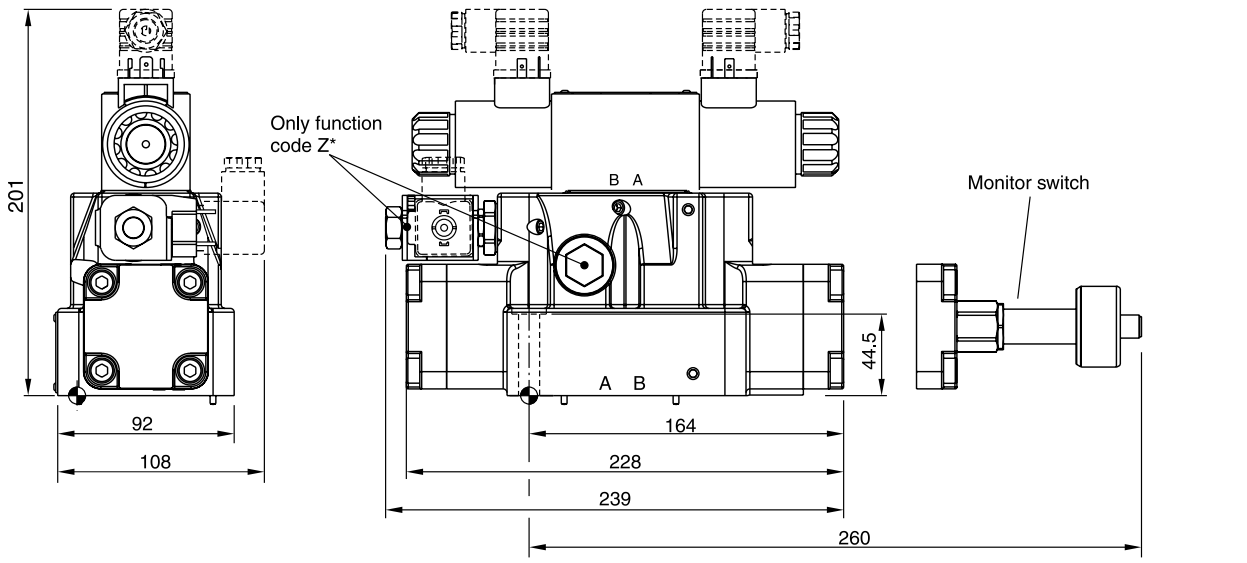

Surface finish	Kit			Kit
$R_{max}6.3$ 0.01/100	BK320	2x M6x55 4x M10x60 ISO 4762-12.9	13.2 Nm ±15 % 63 Nm ±15 %	NBR: SK-D41FB FPM: SK-D41FB-V

3

D91FB

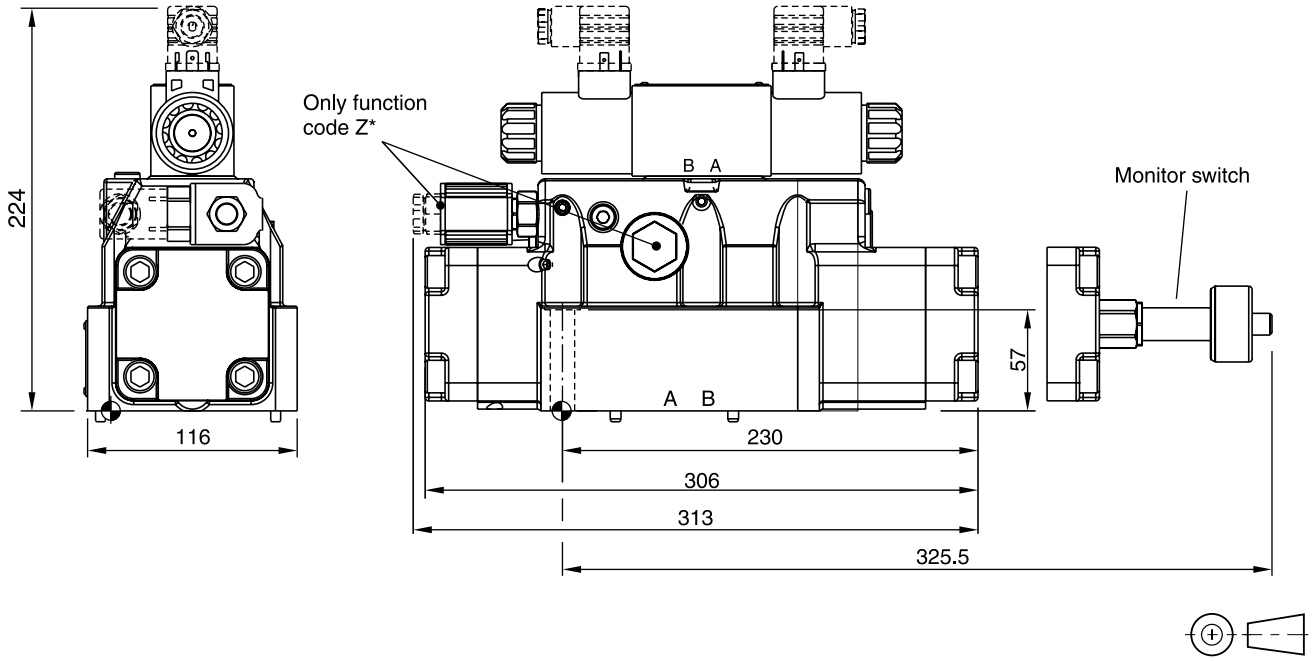

Surface finish	Kit			Kit
$\sqrt{R_{max}6.3}$ 0.01/100	BK360	6x M12x75 ISO 4762-12.9	108 Nm ±15 %	NBR: SK-D91FB FPM: SK-D91FB-V

D111FB

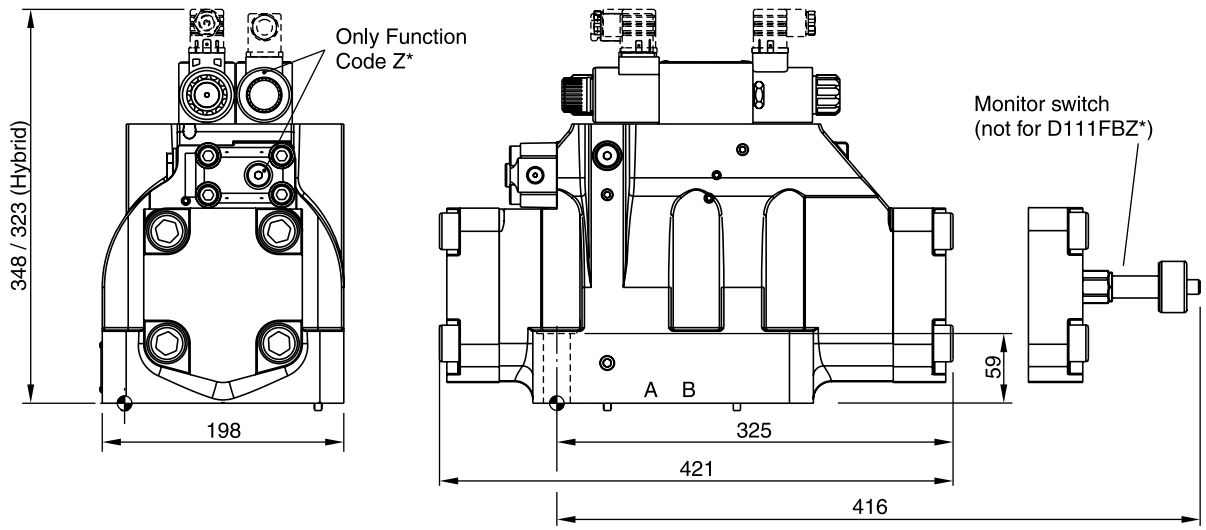

Surface finish	Kit			Kit
$\sqrt{R_{max}6.3}$ 0.01/100	BK386	6x M20x90 ISO 4762-12.9	517 Nm ±15 %	NBR: SK-D111FB FPM: SK-D111FB-V

Dimension with DT04-2P "Deutsch" Connector

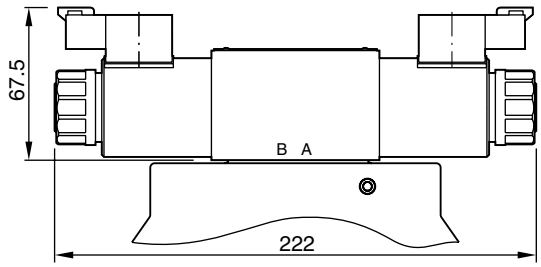

3

D31FB OBE

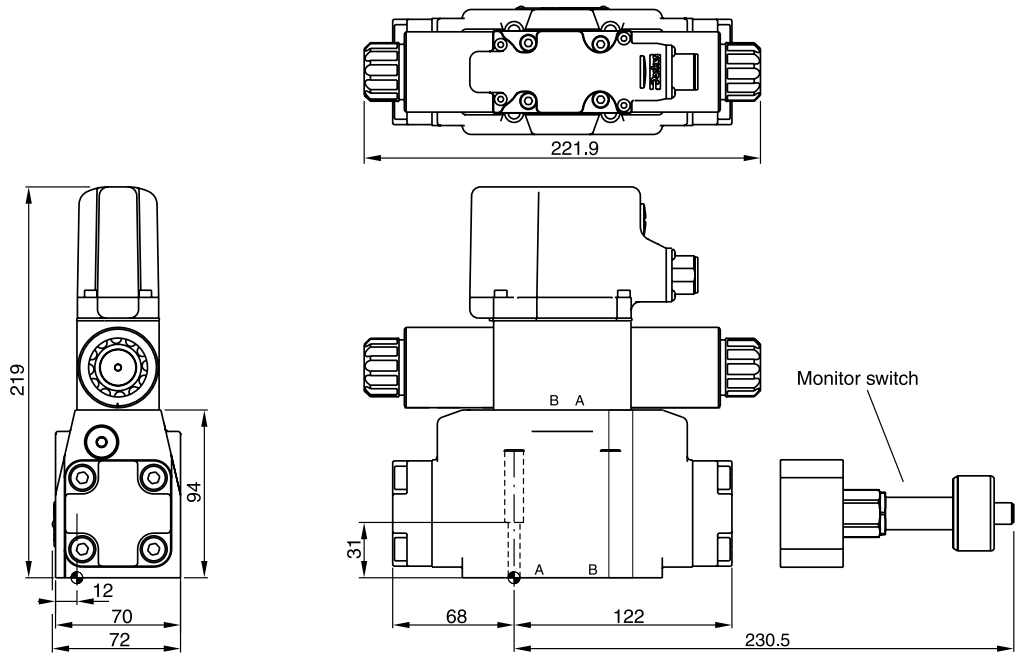

Regenerative and hybrid function with additional plate "H10-1666L / H10-1662 / A10-1664 / A10-1665L", see chapter 12.

Surface finish	Kit			Kit
$\sqrt{R_{max}6.3}$ 0.01/100	BK385	4x M6x40 ISO 4762-12.9	13.2 Nm ±15 %	NBR: SK-D31FB FPM: SK-D31FB-V

D41FB OBE

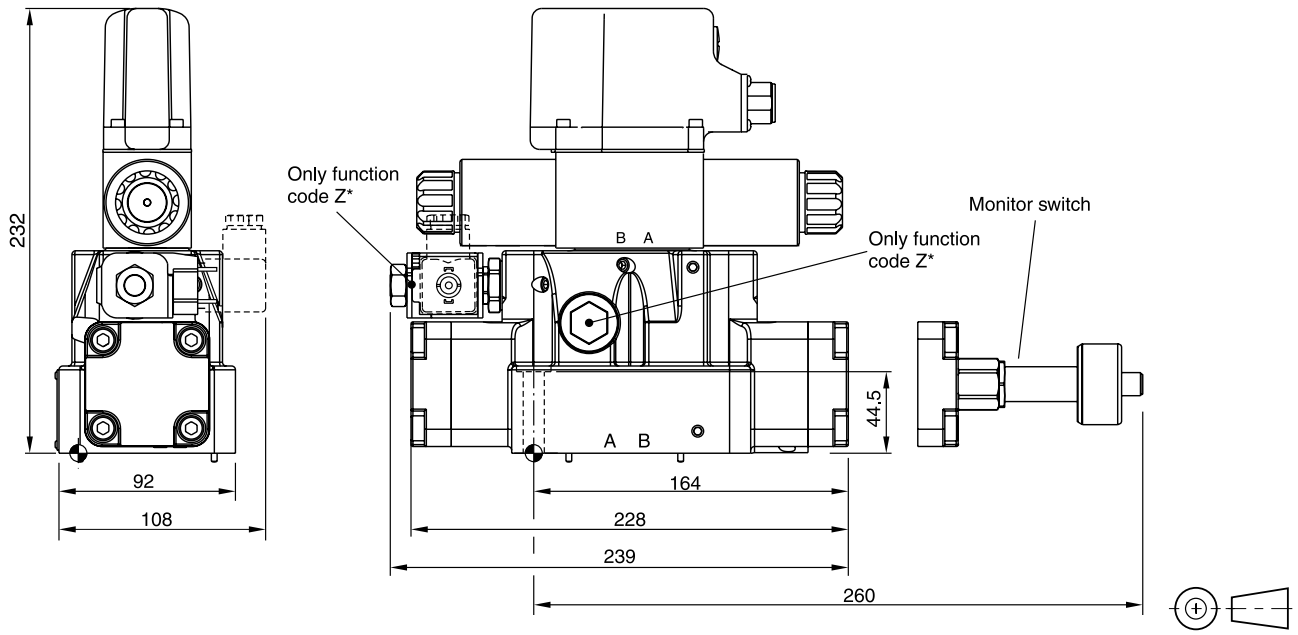

Surface finish	Kit			Kit
$\sqrt{R_{max}6.3}$ 0.01/100	BK320	2x M6x55 4x M10x60 ISO 4762-12.9	13.2 Nm ±15 % 63 Nm ±15 %	NBR: SK-D41FB FPM: SK-D41FB-V

D91FB OBE

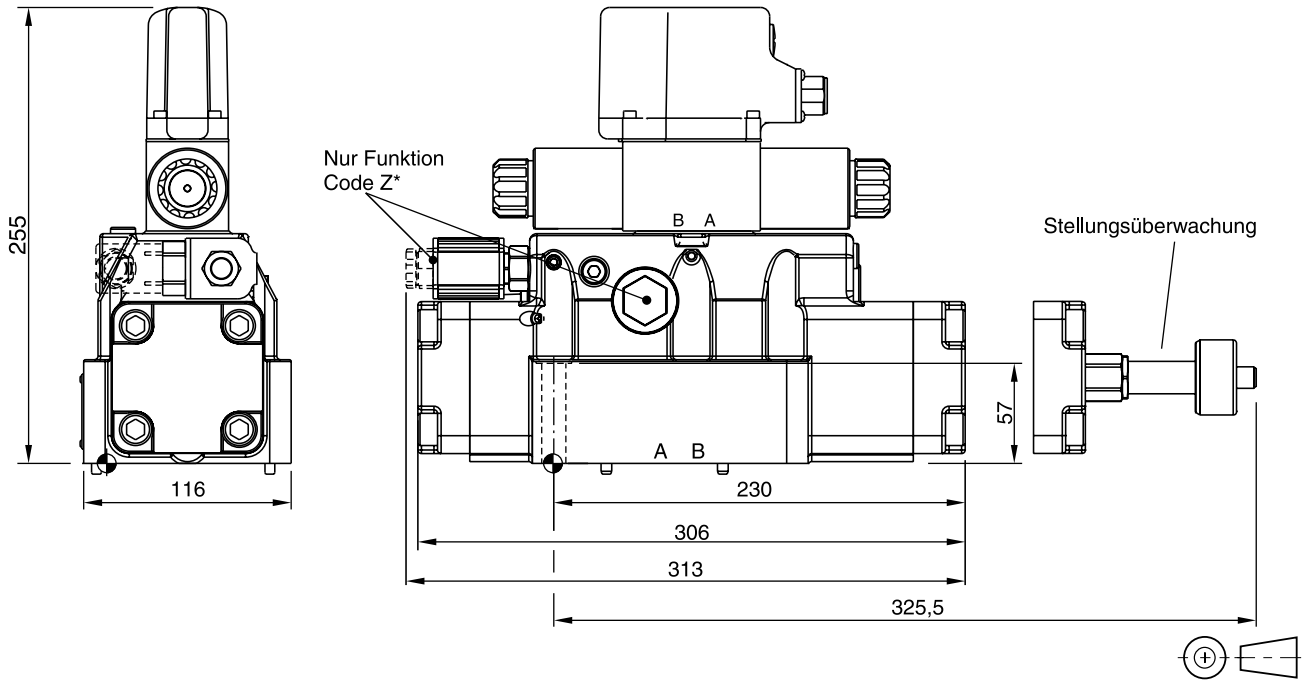

Surface finish	Kit			Kit
$\sqrt{R_{max}6.3}$ 0.01/100	BK360	6x M12x75 ISO 4762-12.9	108 Nm ±15 %	NBR: SK-D91FB FPM: SK-D91FB-V

D111FB OBE

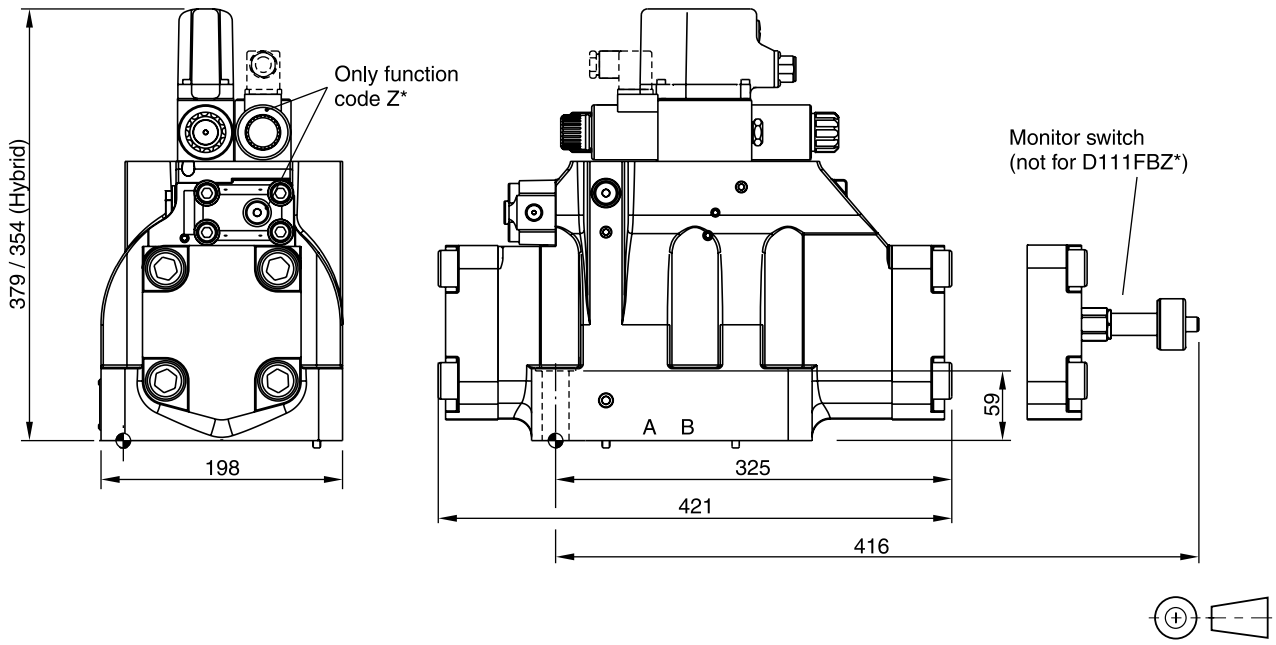

Surface finish	Kit			Kit
$\sqrt{R_{max}6.3}$ 0.01/100	BK386	6x M20x90 ISO 4762-12.9	517 Nm ±15 %	NBR: SK-D111FB FPM: SK-D111FB-V

The proportional pressure reducing valves series D1FV are available with and without onboard electronics (OBE).

D1FV OBE

The digital onboard electronics is situated in a robust metal housing, which allows the usage under rough environmental conditions.

The nominal values are factory set. The cable for connection to a serial RS232 interface is available as accessory.

3

D1FV for external electronics

The parameters can be saved, changed and duplicated in combination with the digital power amplifier PWD00A-400. The value parameters can be edited with the common ProPxD software for both versions.

The D1FV valves control the pressure in the A- or B-ports using the barometric feedback principle.

Valves with explosion proof solenoids Ex e mb II see catalogue HY11-3343.

Download: www.parker.com/euro_hcd - see “Literature”

Technical Features

- Barometric feedback
- 3 command options for D1FV OBE: ±10 V, 4...20 mA, ±20 mA
- High repeatability from valve to valve
- Low hysteresis
- Manual override
- Pressure stages 25 bar and 45 bar



D1FV



D1FV OBE

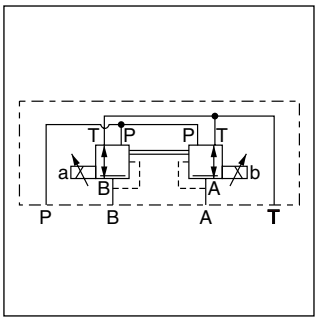

Function C

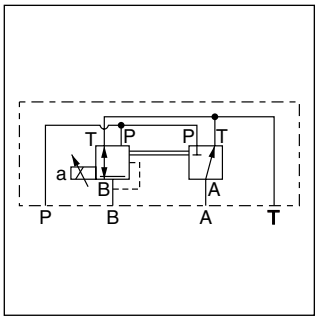

Function E

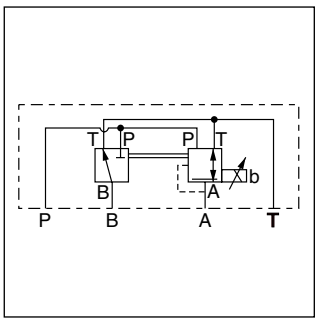

Function K

D1FV*3 OBE

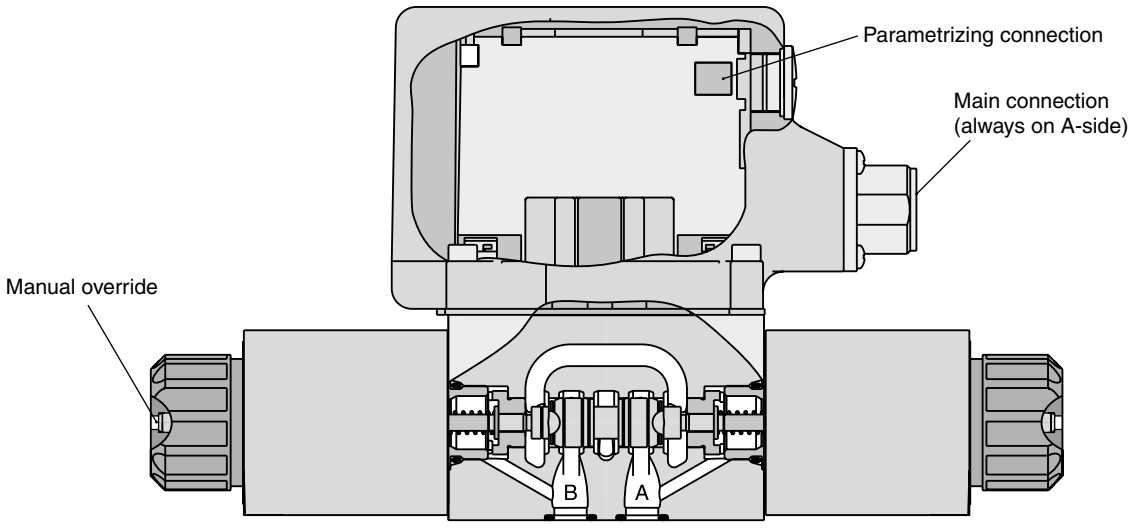

D1FV

D	1	F	V	E02			0		K		3	
Proportional pressure reducing valve	Size DIN NG06 CETOP 03 NFPA D03	Proportional control		Spool type	Pressure range	Control function		Seals	Solenoid 12 V / 2.2 A	Connector	Spool/ body design	Design series (not required for ordering)

Code	Pressure range
C	25 bar
D	45 bar

Code	Control function
C	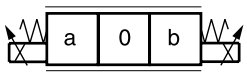
E	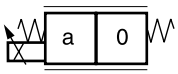
K	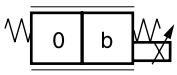

Code	Connector
W	Connector as per EN 175301-803
J	Connector DT04-2P "Deutsch"

Code	Seals
N	NBR
V	FPM

D1FV OBE (with onboard electronics)

D	1	F	V	E02			0				3	
Proportional pressure reducing valve	Size DIN NG06 CETOP 03 NFPA D03	Proportional control		Spool type	Pressure range	Control function		Seals	Input signal	Electronic attachment	Spool/ body design	Design series (not required for ordering)

Code	Pressure range
C	25 bar
D	45 bar

Code	Control function
C	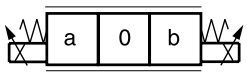
E	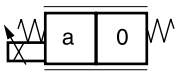
K	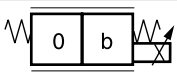

Spool position				
Code	Input signal [1]	Function	Port	Options
F0	0...+/-10 V	0...+10 V > P-A	6 + PE	Potentiometer supply
G0	0...+/-20 mA	0...+20 mA > P-A	6 + PE	—
M0	0...+/-10 V	0...+10 V > P-B	6 + PE	Potentiometer supply
S0	4...20 mA	12...20 mA > P-A	6 + PE	—
W5 [2]	0...+/-10 V 4...20 mA 0...+/-20 mA	0...+10 V > P-A 12...20 mA > P-A 0...+20 mA > P-A	11 + PE	Command channel & potentiometer supply

Code	Seals
N	NBR
V	FPM

Short delivery time for all variations

Please order connector separately, see chapter 3 accessories.
Parametrizing cable OBE → RS232, item no. 40982923

[1] Single solenoid always 0...+10 V respectively 4...20 mA.

[2] Factory set ±10 V on delivery.

3

General		
Design		Direct operated proportional pressure reducing valve
Actuation		Proportional solenoid
Size		NG06/CETOP 03/NFPA D03
Mounting interface		DIN 24340 / ISO 4401 / CETOP RP121 / NFPA
Mounting position		unrestricted
Ambient temperature	[°C]	-20...+60
$MTTF_D$ value [1]	[years]	150
Weight (OBE)	[kg]	2.2 (2.9)
Hydraulic		
Max. operating pressure	[bar]	Ports P, A, B 350; Port T 185
Max. pressure drop PABT / PBAT	[bar]	350
Fluid		Hydraulic oil according to DIN 51524...535, other on request
Fluid temperature	[°C]	-20...+60 (NBR: -25...+60)
Viscosity permitted recommended	[cSt] / [mm^2/s] [cSt] / [mm^2/s]	20...400 30...80
Filtration		ISO 4406; 18/16/13
Max. flow	[l/min]	10
Min. primary pressure	[bar]	30 at 25 pressure range, 50 at 45 pressure range
Static / Dynamic		
Hysteresis	[%]	<4
Temperature drift solenoid current	[%/K]	<0.02
Electrical characteristics (D1FV)		
Duty ratio	[%]	100 ED; CAUTION: coil temperature up to 150 °C possible
Protection class		Standard (as per EN175301-803) IP65 in accordance with EN60529 (with correctly mounted plug-in connector); DT04-2P “Deutsch“ IP69K (with correctly mounted plug-in connector)
Supply voltage	[V]	12
Current consumption	[A]	2.2
Resistance	[Ohm]	4.4
Solenoid connection		Connector as per EN 175301-803 (code W), DT04-2P “Deutsch“ connector (code J). Solenoid identification as per ISO 9461.
Wiring min.	[mm^2]	3x1.5 (AWG 16) overall braid shield (code W), "Deutsch" connector DP4 2 Pin (code J)
Wiring length max.	[m]	50 recommended

[1] If valves with onboard electronics are used in safety-related parts of control systems, in case the safety function is requested, the valve electronics voltage supply is to be switched off by a suitable switching element with sufficient reliability.

With electrical connections the protective conductor (PE ⏚) must be connected according to the relevant regulations.

Electrical characteristics (D1FV OBE)		
Vibration resistance	[g]	10 Sinus 5...2000 Hz acc. IEC 68-2-6 10 (RMS) Random noise 20...2000 Hz acc. IEC 68-2-36 15 Shock acc. IEC 68-2-27
Duty ratio	[%]	100 ED; CAUTION: coil temperature up to 150 °C possible
Protection class		IP65 in accordance with EN 60529 (plugged and mounted)
Supply voltage/ripple DC	[V]	18...30, ripple < 5 % eff., surge free
Current consumption max.	[A]	2.0
Pre fusing medium lag	[A]	2.5
Input signal		
Codes F0 & W5		
voltage	[V]	+10...0...-10, ripple < 0.01 % eff., surge free, Ri = 100 kOhm, 0...+10 V ⇒ P -> A
Codes M0		
voltage	[V]	+10...0...-10, ripple < 0.01 % eff., surge free, Ri = 100 kOhm, 0...+10 V ⇒ P -> B
Codes S0 & W5	[mA]	4...12...20, ripple < 0.01 % eff., surge free, Ri = <250 Ohm, 12...20 mA ⇒ P -> A
current		< 3.6 mA = enable off, > 3.8 mA = enable on (acc. to NAMUR NE43)
Code G0	[mA]	+20...0...-20, ripple < 0.01 % eff., surge free, Ri = <250 Ohm, 0...+20 mA ⇒ P -> A
Differential input max.		
Codes F0, G0, M0 & S0	[V]	30 for terminal D and E against PE (terminal G) 11 for terminal D and E against 0V (terminal B)
Code W5	[V]	30 for terminal 4 and 5 against PE (terminal PE) 11 for terminal 4 and 5 against 0V (terminal 2)
Channel recall signal	[V]	0...2.5: off / 5...30: on / Ri = 100 kOhm
Adjustment ranges Min	[%]	0...50
Max	[%]	50...100
Ramp	[s]	0...32.5
Interface		RS 232, parametrizing connection 5pole
EMC		EN 61000-6-2, EN 61000-6-4
Central connection		
Codes F0, G0, M0 & S0		6 + PE acc. to EN 175201-804
Code W5		11 + PE acc. to EN 175201-804
Wiring min.		
Codes F0, G0, M0 & S0	[mm²]	7 x 1.0 (AWG16) overall braid shield
Code W5	[mm²]	11 x 1.0 (AWG16) overall braid shield
Wiring length max.		50

Flow characteristics

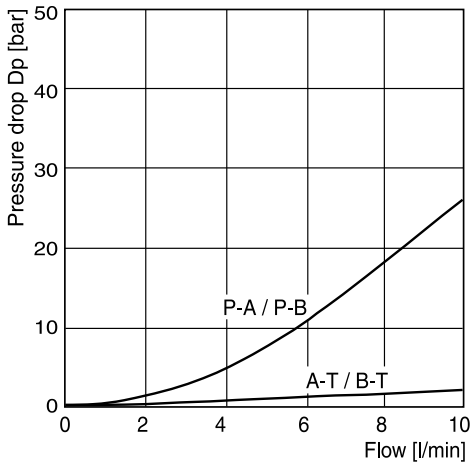

All characteristic curves measured with HLP46 at 50 °C.

3

Code F0, M0
6 + PE acc. to EN 175201-804

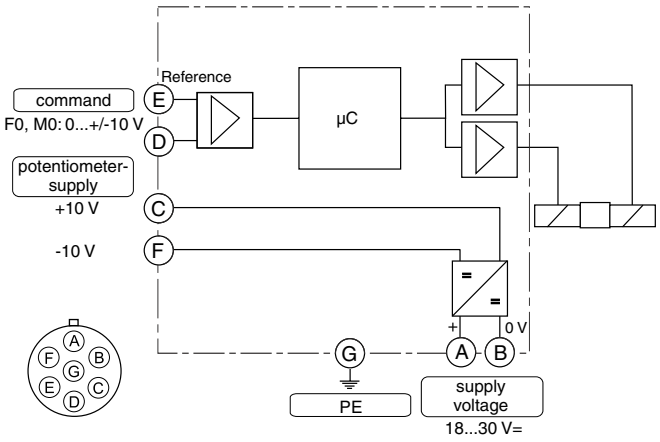

Code G0, S0
6 + PE acc. to EN 175201-804

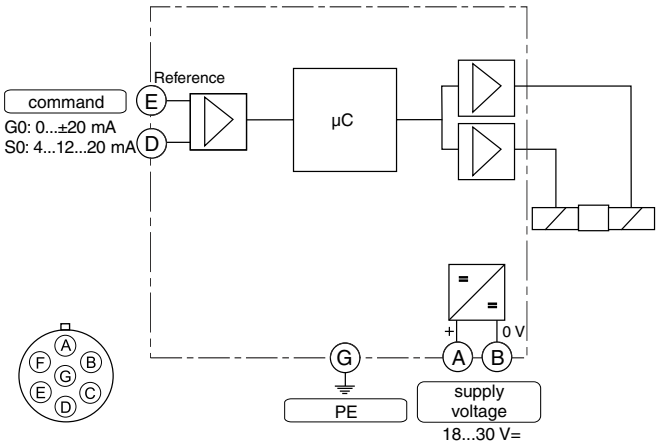

Code W5
11 + PE acc. to EN 175201-804

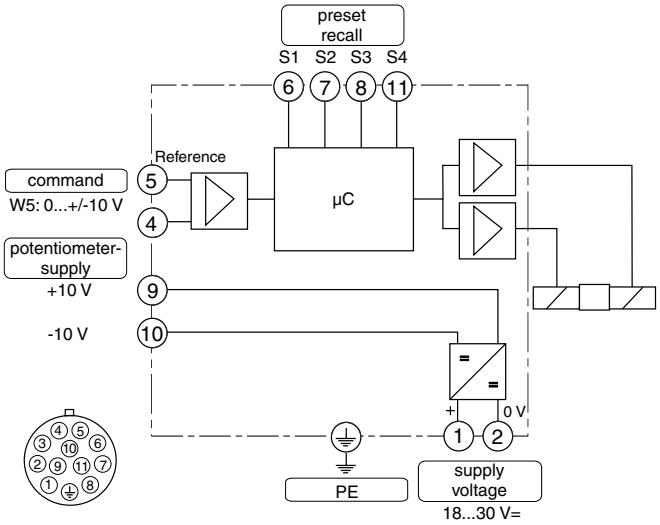

ProPxD interface program

The ProPxD software permits comfortable parameter setting for the module electronics. Via the clearly arranged entry mask the parameters can be noticed and modified. Storage of complete parameter sets is possible as well as printout or record as a text file for further documentation. Stored parameter sets may be loaded anytime and transmitted to other valves. Inside the electronics a non-volatile memory stores the data with the option for recalling or modification.

The PC software can be downloaded free of charge at www.parker.com/isde – see page “Support" or directly at www.parker.com/propxd.

Features

- Comfortable editing of all parameters
- Depiction and documentation of parameter sets
- Storage and loading of optimized parameter adjustments
- Executable with all actual Windows® operating systems from Windows® XP upwards
- Plain communication between PC and electronics via serial interface RS232C

The parametrizing cable may be ordered under item no. 40982923.

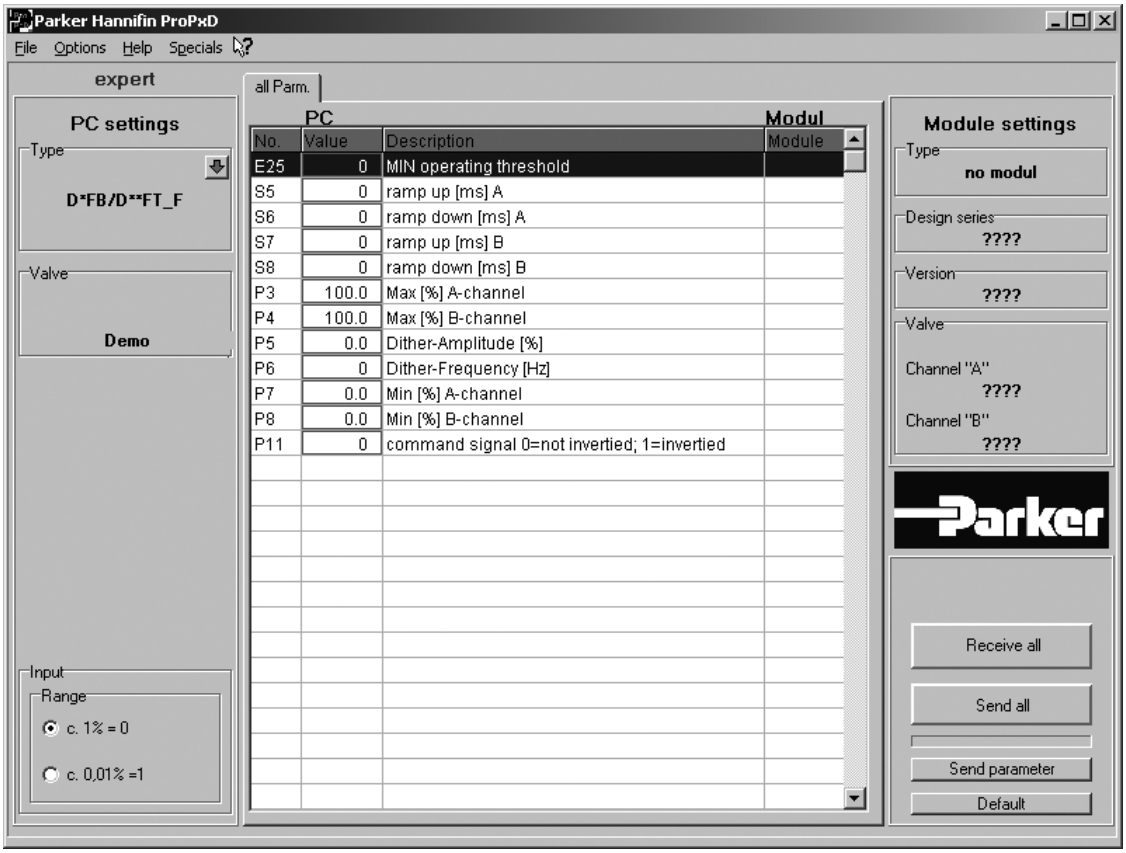

3

D1FV*C

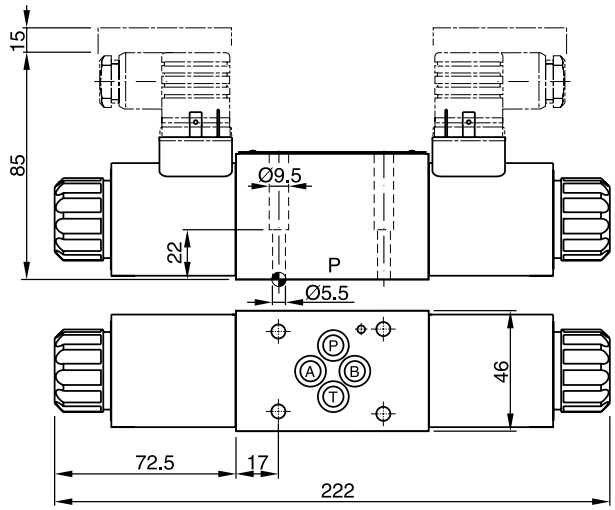

D1FV*E

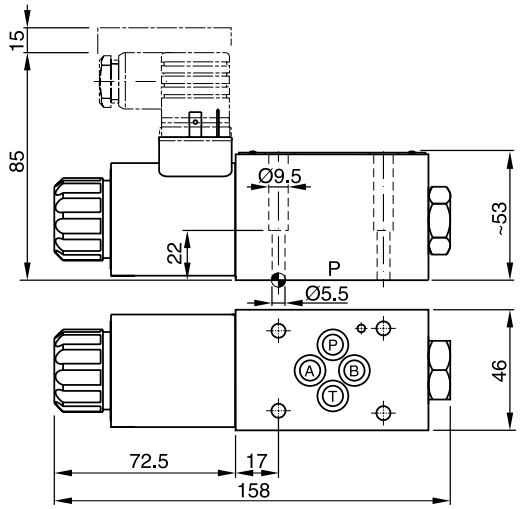

D1FV*K

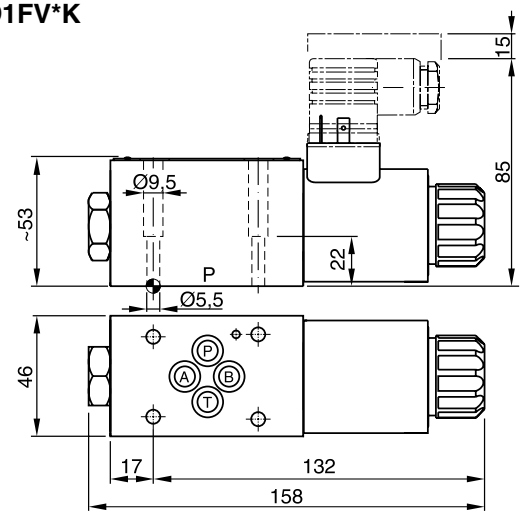

D1FV*C with DT04-2P "Deutsch" connector
(only C style shown)

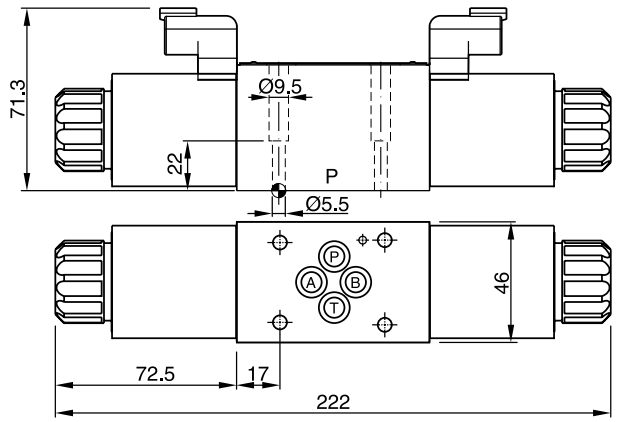

Surface finish	Kit			Kit NBR
$\sqrt{R_{max}6.3}$ 0.01/100	BK375	4x M5x30 ISO 4762-12.9	7.6 Nm ±15 %	SK-D1FB

D1FV*C OBE

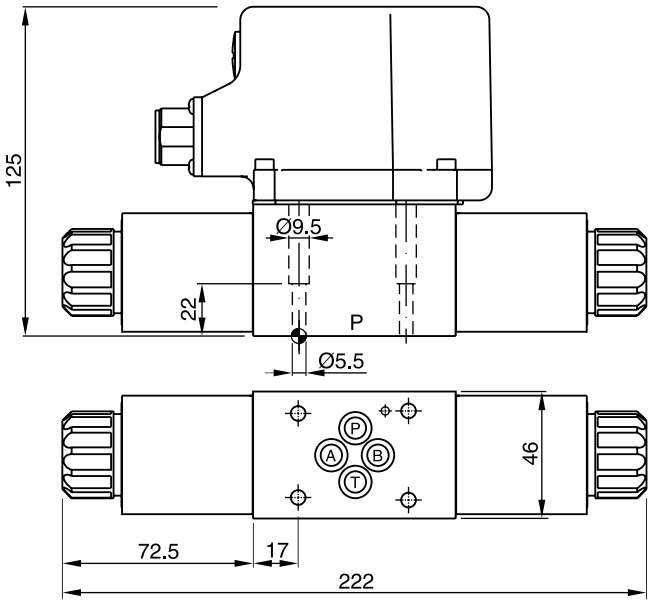

D1FV*E OBE

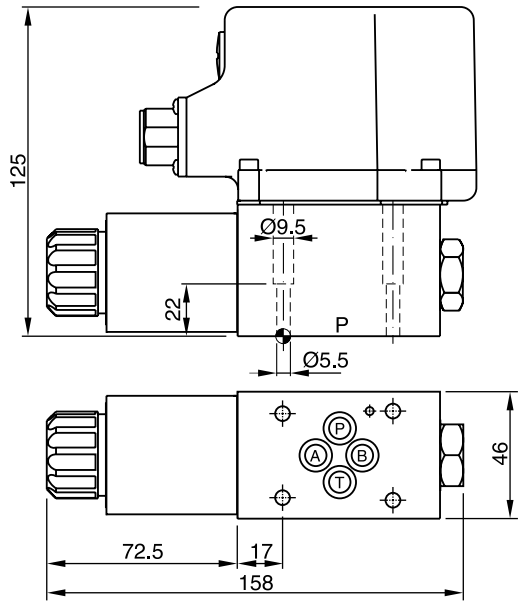

D1FV*K OBE

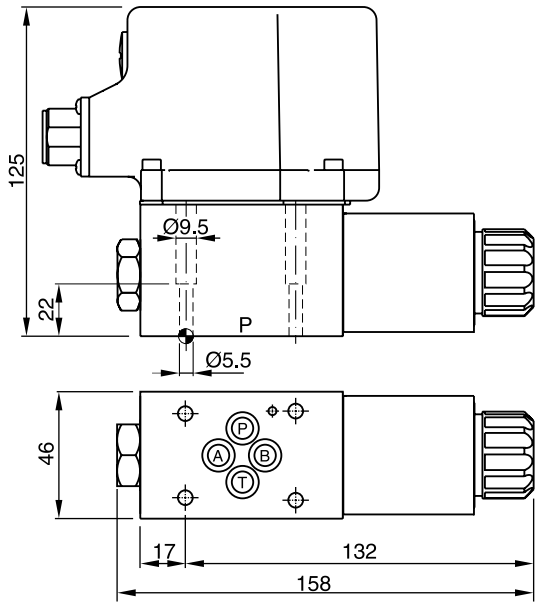

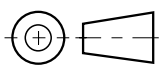

Surface finish	Kit			Kit NBR
R_{max}6.3 ⏥ 0.01/100	BK375	4x M5x30 ISO 4762-12.9	7.6 Nm ±15 %	SK-D1FB

The new direct operated proportional DC valve series D1FC (NG06) with digital onboard electronics and position feedback provides high dynamics combined with high flow.

The D1FC is available with overlap spools for open loop applications as well as zero lap spools for closed loop control.

The LVDT is completely integrated into the housing and it does not require an exposed cable connection. Thus an unintended disconnection is impossible.

The digital onboard electronics is situated in a robust metal housing, which allows the usage under rough environmental conditions. The nominal values are factory set. The parametrizing cable to connect to a serial RS232 interface is available as accessory.

Features

- Progressive flow characteristics for sensitive adjustment
- Low hysteresis
- High dynamics
- High flow capacity
- Compact dimensions
- Defined spool positioning at power-down for zero lap spools



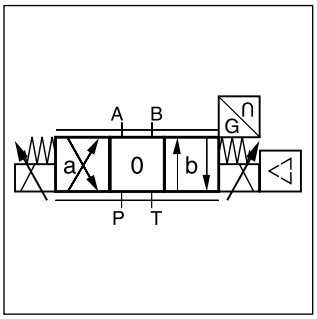

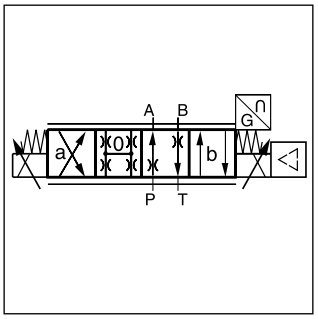

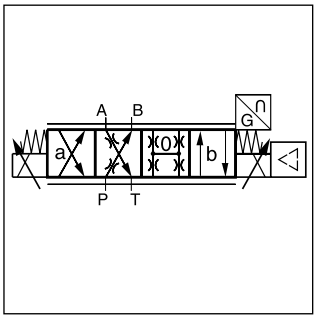

CE

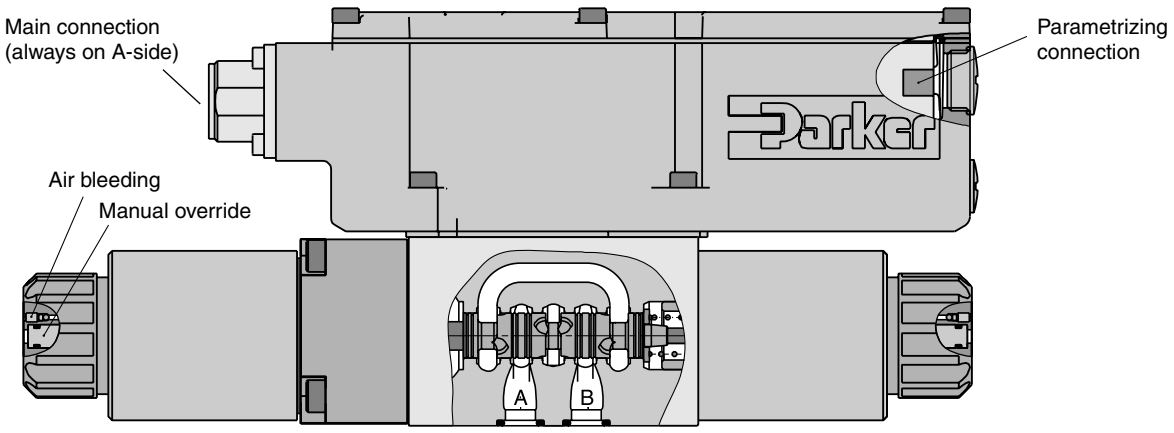

D	1	F	C			9				3	
Direct operated DC Valve	**Size DIN NG06 CETOP 03 NFPA D03**	**Proportional control**	**High dynamics**	**Spool type**	**Spool position on power down [1]**	**Drain port Y plugged [4]**	**Seal**	**Command signal**	**Electronic option**	**Spool/ body design**	**Design series** (not required for ordering)

Code	Spool type	Flow [l/min] at Δp 5 bar per metering edge
Zerolap		
E50C **E50F** **E50H** **E50K**		**5** **10** **20** **30**
B60F **B60H** **B60K**	$Q_B = Q_A/2$ 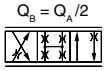	**5 / 10** **10 / 20** **15 / 30**
Overlap		
E01C **E01F** **E01H** **E01K**	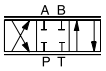	**5** **10** **20** **30**
E02C **E02F** **E02H** **E02K**		**5** **10** **20** **30**
B31F **B31H** **B31K**	$Q_B = Q_A/2$ 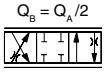	**5 / 10** **10 / 20** **15 / 30**
B32F **B32H** **B32K**	$Q_B = Q_A/2$ 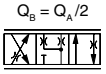	**5 / 10** **10 / 20** **15 / 30**

Code	Electronic option [5]
0	**6+PE acc. EN175201-804**
5	**11+PE acc. EN175201-804**
7	**6+PE + enable acc. EN175201-804**

Code	Command signal	Function
B	**0...±10 V**	**0...+10 V P -> A**
E	**0...±20 mA**	**0...+20 mA P -> A**
S	**4...20 mA**	**12...20 mA P -> A**

Code	Seal
N	**NBR**
V	**FPM**

Code	Spool pos. at power down
A [2]	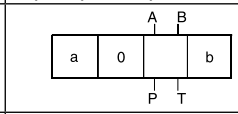
B [2]	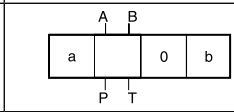
C [3]	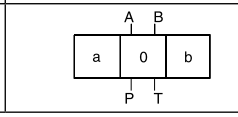

Short delivery time for all variations

Parametrizing cable OBE → RS232, item no. 40982923

[1] On power down the spool moves in a defined position. This cannot be guaranteed in case of single flow path on the control edge A – T resp. B – T with pressure drops above 120 bar or contamination in the hydraulic fluid.
[2] Approx. 10 % opening, only zero lap spools.
[3] Only for overlap spools.
[4] Plug in port Y needs to be removed at tank pressure >35 bar.
[5] Please order connector separately, see chapter 3 accessories.

3

General			
Design			Direct operated proportional DC valve with position feedback
Actuation			Proportional solenoid
Size			**NG06 / CETOP 03 / NFPA D03**
Mounting interface			DIN 24340 / ISO 4401 / CETOP RP121 / NFPA
Mounting position			unrestricted
Ambient temperature		[°C]	-20...+60
$MTTF_D$ value [1]		[years]	150
Weight		[kg]	3.4
Vibration resistance		[g]	10 Sinus 5...2000 Hz acc. IEC 68-2-6 10 (RMS) Random noise 20...2000 Hz acc. IEC 68-2-36 15 Shock acc. IEC 68-2-27
Hydraulic			
Max. operating pressure		[bar]	Ports P, A, B 350, port T max. 35; 210 (external drain); port Y max. 35
Max. pressure drop PABT / PBAT		[bar]	350
Fluid			Hydraulic oil according to DIN 51524 ... 535, other on request
Fluid temperature		[°C]	-20...+60 (NBR: -25...+60)
Viscosity	permitted	[cSt] / [mm²/s]	20...400
	recommended	[cSt] / [mm²/s]	30...80
Filtration			ISO 4406; 18/16/13
Nominal flow at Δp=5 bar per control edge [2]		[l/min]	5 / 10 / 20 / 30
Leakage at 100 bar		[ml/min]	<800 (zerolap spool); <50 (overlap spool)
Opening point			set to 10 % command signal (see flow characteristics)
Static / Dynamic			
Step response at 100 % step		[ms]	20
Hysteresis		[%]	<0.1
Temperature drift		[%/K]	<0.01
Electrical characteristics			
Duty ratio		[%]	100
Protection class			IP65 in accordance with EN 60529 (with correctly mounted plug-in connector)
Supply voltage/ripple	DC	[V]	18...30, electric shut-off at < 17, ripple < 5 % eff., surge free
Current consumption max.		[A]	2.0
Pre fusing medium lag		[A]	2.5
Command Code B	voltage	[V]	+10...0...-10, ripple < 0.01% eff., surge free, 0...+10 V P->A
	impedance	[kOhm]	100
Code S	current	[mA]	4...12...20, ripple < 0.01 % eff., surge free, 12...20 mA P–>A < 3.6 mA = enable off, > 3.8 mA = enable on (according to NAMUR NE43)
	impedance	[Ohm]	<250
Code E	current	[mA]	+20...0...-20, ripple < 0.01 % eff., surge free, 0...+20 mA P–>A
	impedance	[Ohm]	<250
Differential input max.	Code 0/7	[V]	30 for terminal D and E against PE (terminal G) 11 for terminal D and E against 0 V (terminal B)
	Code 5		30 for terminal 4 and 5 against PE (terminal PE) 11 for terminal 4 and 5 against 0 V (terminal 2)
	Min	[%]	0...50
Adjustment ranges	Max	[%]	50...100
	Ramp	[s]	0...32.5
Parametrizing interface			RS232C, parametrizing connection 5pole
Enable signal (code 5/7)		[V]	5...30
Diagnostic signal		[V]	+10...0...-10 / +12.5 error detection, rated max. 5 mA
EMC			EN 61000-6-2, EN 61000-6-4
Electrical connection	Code 0/7		6 + PE acc. to EN 175201-804
	Code 5		11 + PE acc. to EN 175201-804
Wiring min.	Code 07	[mm²]	7 x 1.0 (AWG 16) overall braid shield
	Code 5	[mm²]	8 x 1.0 (AWG 16) overall braid shield
Wiring length max.		[m]	50

[1] If valves with onboard electronics are used in safety-related parts of control systems, in case the safety function is requested, the valve electronics voltage supply is to be switched off by a suitable switching element with sufficient reliability.

[2] Flow rate for different Δp per control edge: $Q_x = Q_{Nom.} \cdot \sqrt{\frac{\Delta p_x}{\Delta p_{Nom.}}}$

Flow characteristics
(set to opening point 10 %) at $\Delta p = 5$ bar per metering edge

Spool type E01

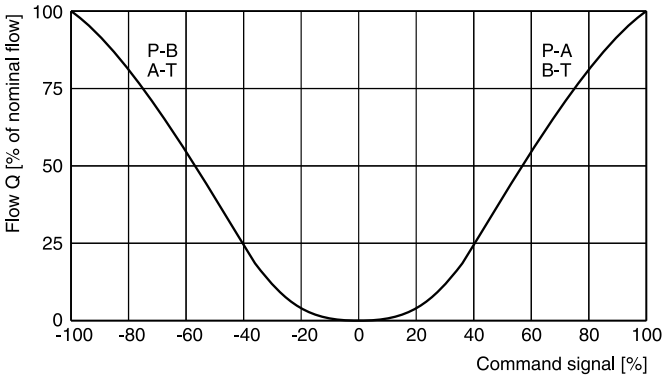

Spool type B31

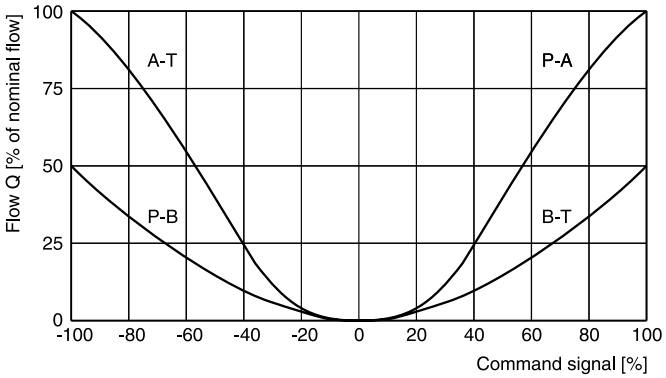

Spool type E50

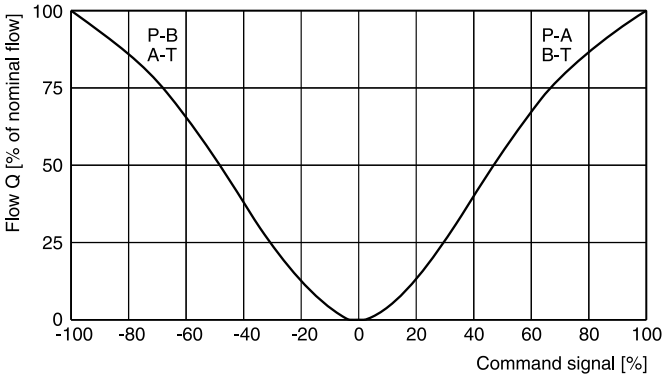

Spool type B60

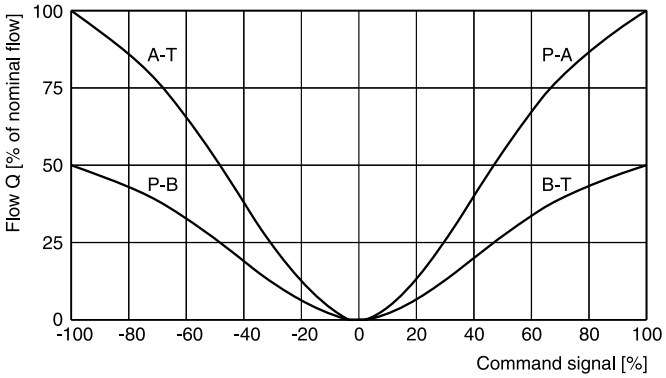

All characteristic curves measured with HLP46 at 50 °C.

3

Functional limits

25 %, 50 %, 75 % and 100 % command signal (symmetric flow).
At asymmetric flow a reduced flow limit has to be considered.

Spool type E01C

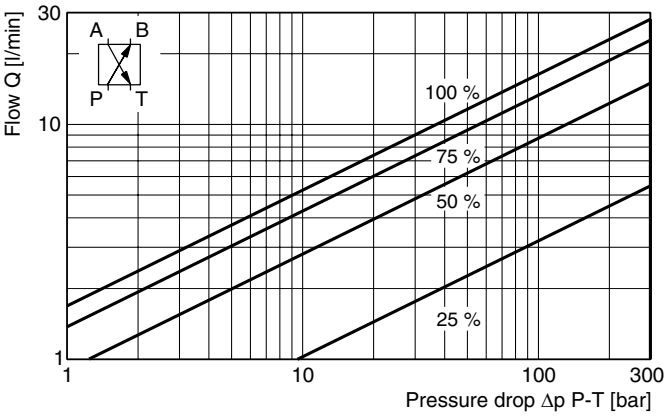

Spool type E01F

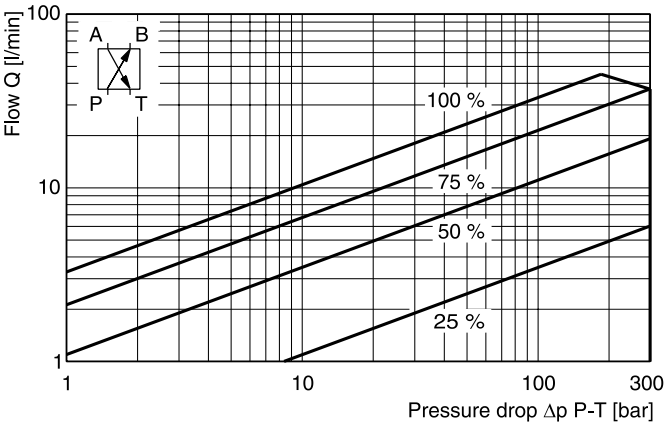

Spool type E01H

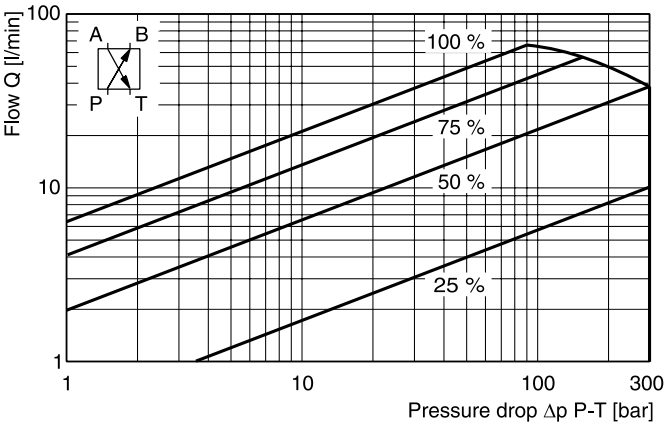

Spool type E01K

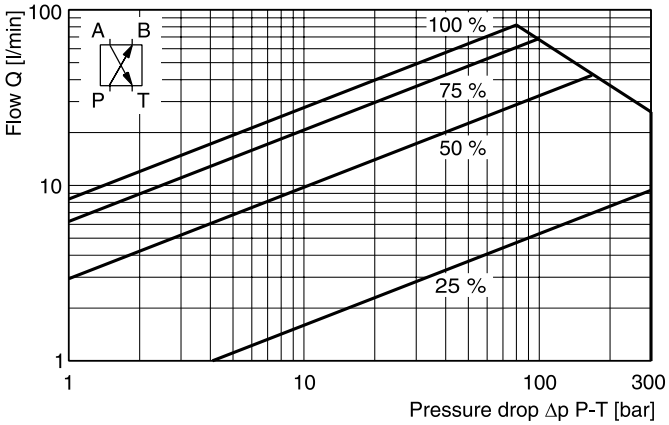

Frequency

± 5 %, ± 25 %, ± 90 % input signal

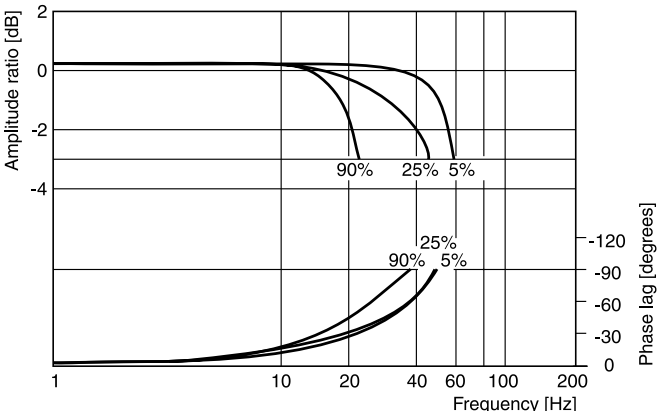

Step response

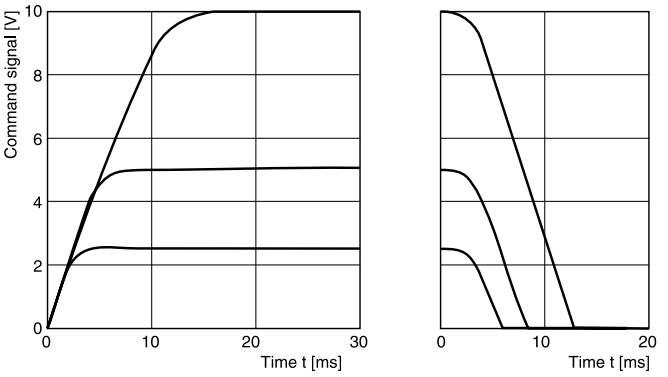

All characteristic curves measured with HLP46 at 50 °C.

Code 0, 3
6 + PE acc. to EN 175201-804

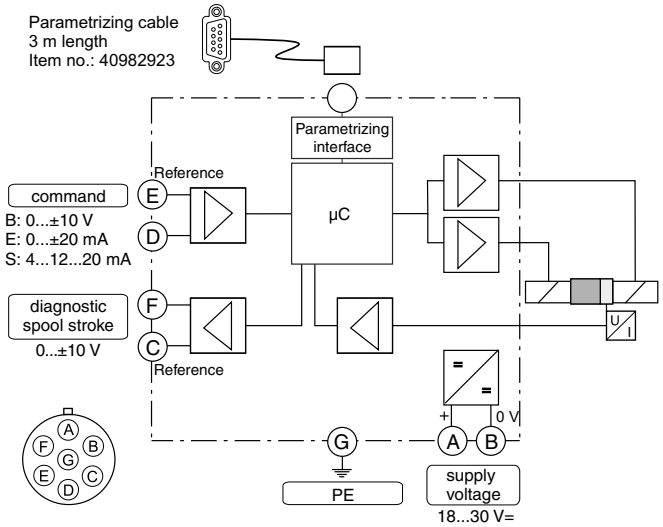

Code 5
11 + PE acc. to EN 175201-804

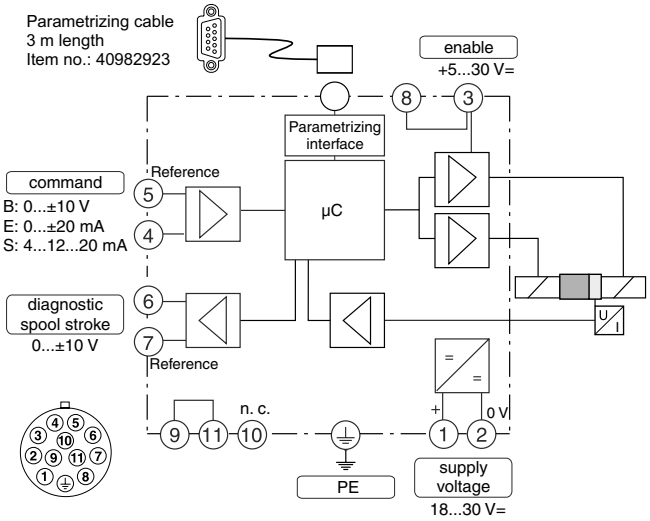

Code 1, 7
6 + PE acc. to EN 175201-804 + enable

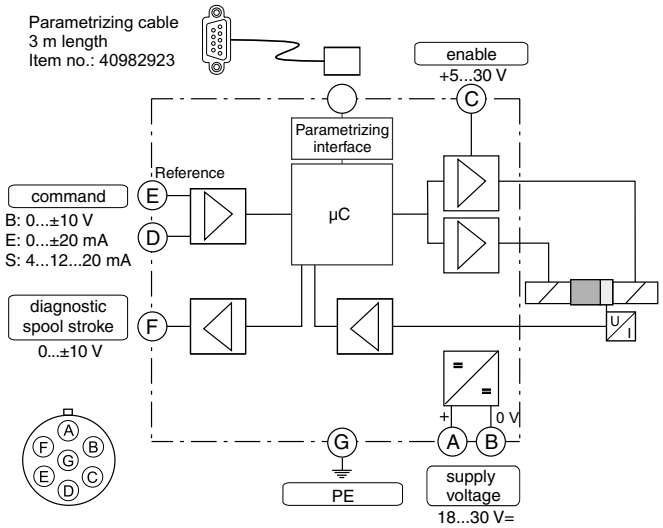

3

3

ProPxD interface program

The ProPxD software permits comfortable parameter setting for the module electronics. Via the clearly arranged entry mask the parameters can be noticed and modified. Storage of complete parameter sets is possible as well as printout or record as a text file for further documentation. Stored parameter sets may be loaded anytime and transmitted to other valves. Inside the electronics a non-volatile memory stores the data with the option for recalling or modification.

The PC software can be downloaded free of charge at www.parker.com/propxd.

Features

- Comfortable editing of all parameters
- Depiction and documentation of parameter sets
- Storage and loading of optimized parameter adjustments
- Executable with all actual Windows® operating systems from Windows® XP upwards
- Plain communication between PC and electronics via serial interface RS232C

The parametrizing cable may be ordered under item no. 40982923.

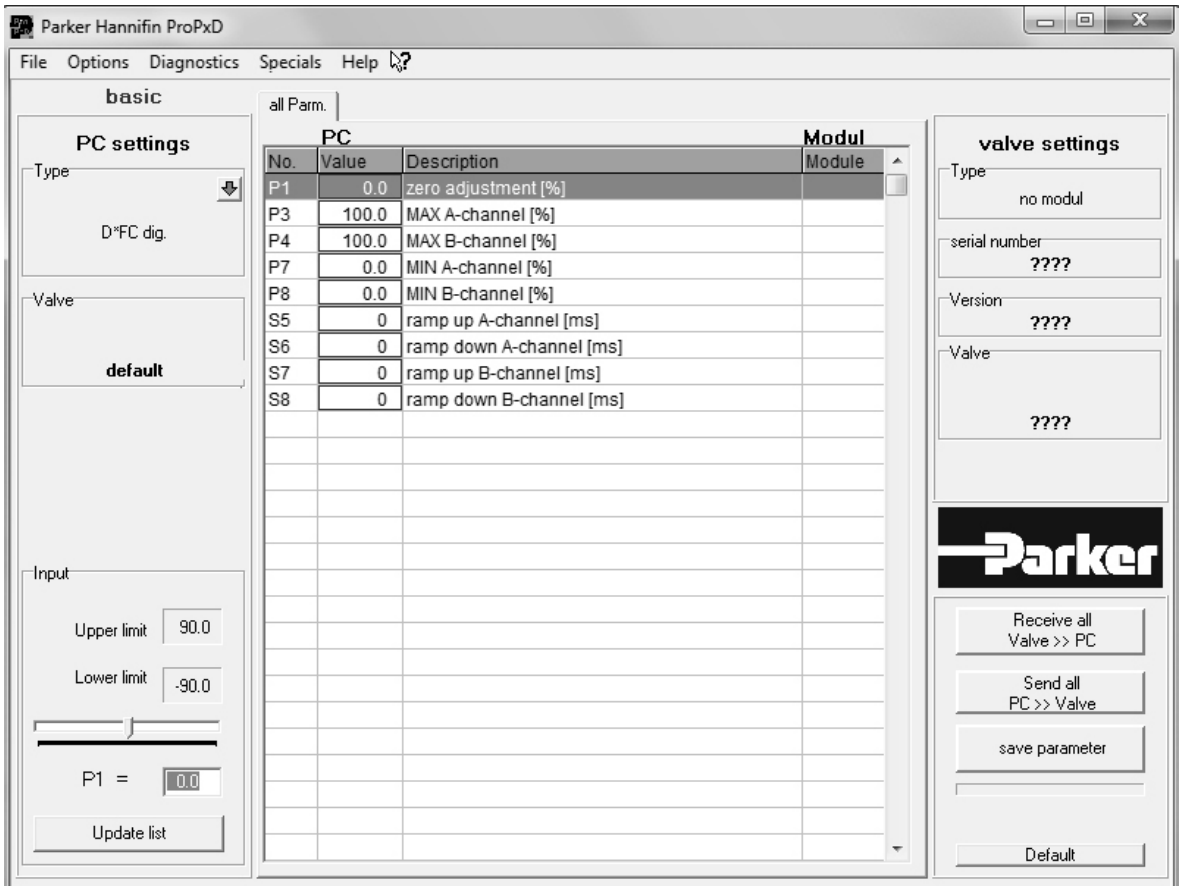

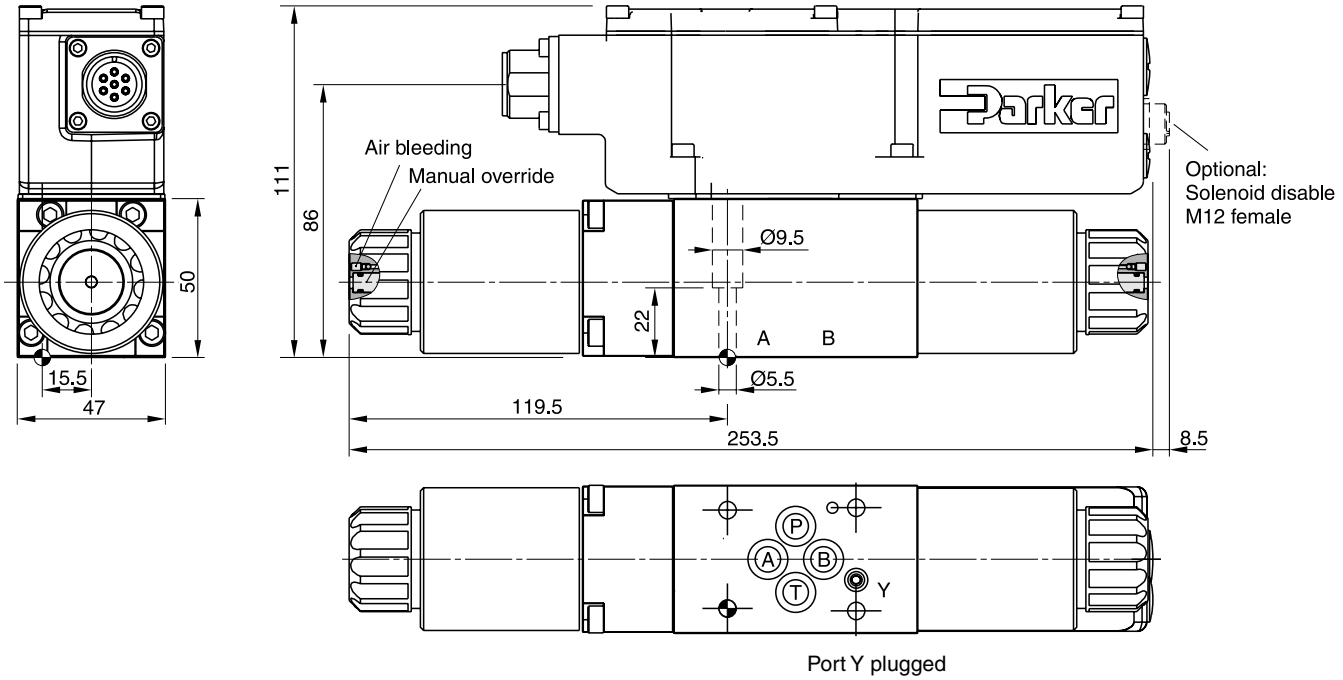

Port Y plugged

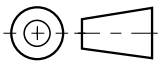

Surface finish	Kit			Kit NBR
R_{max}6.3 0.01/100	BK375	4x M5x30 ISO 4762-12.9	7.6 Nm ±15 %	NBR: SK-D1FC FPM: SK-D1FC-V

The new direct operated proportional DC valve series D3FC (NG10) with digital onboard electronics and position feedback provides high dynamics combined with high flow.

The D3FC is available with overlap spools for open loop applications as well as zero lap spools for closed loop control.

The LVDT is completely integrated into the housing and it does not require an exposed cable connection. Thus an unintended disconnection is impossible.

The digital onboard electronics is situated in a robust metal housing, which allows the usage under rough environmental conditions. The nominal values are factory set. The parametrizing cable to connect to a serial RS232 interface is available as accessory.



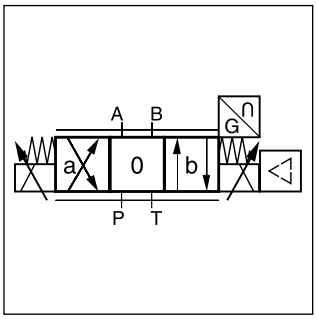

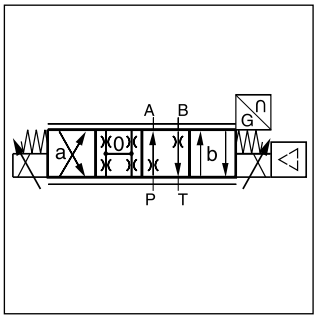

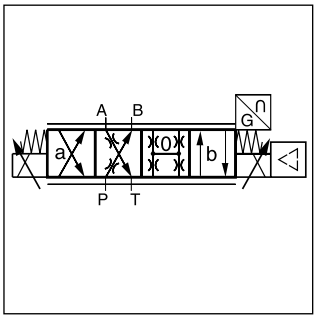

CE

Features

- Progressive flow characteristics for sensitive adjustment
- Low hysteresis
- High dynamics
- High flow capacity
- Compact dimensions
- Defined spool positioning at power-down for zero lap spools

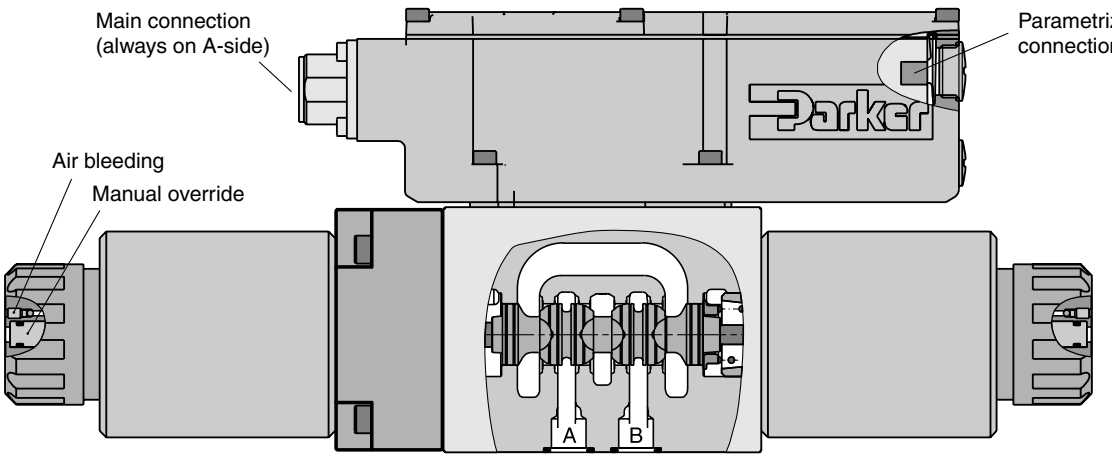

D	3	F	C			9				3	
Direct operated DC Valve	**Size DIN NG10 CETOP 05 NFPA D05**	**Proportional control**	**High dynamics**	**Spool type**	**Spool position on power down [1]**	**Drain port Y plugged [4]**	**Seal**	**Command signal**	**Electronic option**	**Spool/ body design**	**Design series** (not required for ordering)

Code	Spool type	Flow [l/min] at Δp 5 bar per metering edge
Zerolap		
E50M **E50S** **E50U**	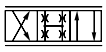	**35** **55** **75**
B60M **B60S** **B60U**	$Q_B = Q_A/2$ 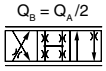	**17 / 35** **27 / 35** **37 / 75**
Overlap		
E01M **E01S** **E01U**	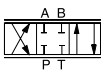	**35** **55** **75**
E02M **E02S** **E02U**		**35** **55** **75**
B31M **B31S** **B31U**	$Q_B = Q_A/2$ 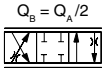	**17 / 35** **27 / 55** **37 / 75**
B32M **B32S** **B32U**	$Q_B = Q_A/2$ 	**17 / 35** **27 / 55** **37 / 75**

Code	Electronic option [5]
0	**6+PE acc. EN175201-804**
5	**11+PE acc. EN175201-804**
7	**6+PE + enable acc. EN175201-804**

Code	Command signal	Function
B	**0...±10 V**	**0...+10 V P -> A**
E	**0...±20 mA**	**0...+20 mA P -> A**
S	**4...20 mA**	**12...20 mA P -> A**

Code	Seal
N	**NBR**
V	**FPM**

Code	Spool pos. at power down
A [2]	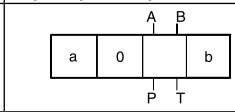
B [2]	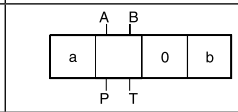
C [3]	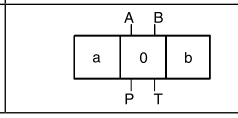

Short delivery time for all variations

Parametrizing cable OBE → RS232, item no. 40982923

[1] On power down the spool moves in a defined position. This cannot be guaranteed in case of single flow path on the control edge A – T resp. B – T with pressure drops above 120 bar or contamination in the hydraulic fluid.
[2] Approx. 10 % opening, only zero lap spools.
[3] Only for overlap spools.
[4] Plug in port Y needs to be removed at tank pressure >35 bar.
[5] Please order connector separately, see chapter 3 accessories.

3

General			
Design			Direct operated proportional DC valve with position feedback
Actuation			Proportional solenoid
Size			**NG10 / CETOP 05 / NFPA D05**
Mounting interface			DIN 24340 / ISO 4401 / CETOP RP121 / NFPA
Mounting position			unrestricted
Ambient temperature		[°C]	-20...+60
$MTTF_D$ value [1]		[years]	150
Weight		[kg]	7.7
Vibration resistance		[g]	10 Sinus 5...2000 Hz acc. IEC 68-2-6 10 (RMS) Random noise 20...2000 Hz acc. IEC 68-2-36 15 Shock acc. IEC 68-2-27
Hydraulic			
Max. operating pressure		[bar]	Ports P, A, B 350, port T max. 35; 210 (external drain); port Y max. 35
Max. pressure drop PABT / PBAT		[bar]	350
Fluid			Hydraulic oil according to DIN 51524 ... 535, other on request
Fluid temperature		[°C]	-20...+60 (NBR: -25...+60)
Viscosity	permitted	[cSt] / [mm²/s]	20...400
	recommended	[cSt] / [mm²/s]	30...80
Filtration			ISO 4406; 18/16/13
Nominal flow at Δp=5 bar per control edge [2]		[l/min]	35 / 55 / 75
Leakage at 100 bar		[ml/min]	<1000 (zerolap spool); <100 (overlap spool)
Opening point		-	set to 10 % command signal (see flow characteristics)
Static / Dynamic			
Step response at 100 % step		[ms]	40
Hysteresis		[%]	< 0.1
Temperature drift		[%/K]	< 0.01
Electrical characteristics			
Duty ratio		[%]	100
Protection class			IP65 in accordance with EN 60529 (with correctly mounted plug-in connector)
Supply voltage/ripple DC		[V]	18...30, electric shut-off at < 17, ripple < 5 % eff., surge free
Current consumption max.		[A]	3.5
Pre fusing medium lag		[A]	4.0
Command Code B	voltage	[V]	+10...0...-10, ripple < 0.01% eff., surge free, 0...+10 V P->A
	impedance	[kOhm]	100
Code S	current	[mA]	4...12...20, ripple < 0.01 % eff., surge free, 12...20 mA P–>A < 3.6 mA = enable off, > 3.8 mA = enable on (according to NAMUR NE43)
	impedance	[Ohm]	< 250
Code E	current	[mA]	+20...0...-20, ripple < 0.01 % eff., surge free, 0...+20 mA P–>A
	impedance	[Ohm]	< 250
Differential input max.	Code 0/7	[V]	30 for terminal D and E against PE (terminal G) 11 for terminal D and E against 0V (terminal B)
	Code 5		30 for terminal 4 and 5 against PE (terminal PE) 11 for terminal 4 and 5 against 0 V (terminal 2)
	Min	[%]	0...50
Adjustment ranges	Max	[%]	50...100
	Ramp	[s]	0...32.5
Parametrizing interface			RS232C, parametrizing connection 5pole
Enable signal (code 5/7)		[V]	5...30
Diagnostic signal		[V]	+10...0...-10 / +12.5 error detection, rated max. 5 mA
EMC			EN 61000-6-2, EN 61000-6-4
Electrical connection	Code 0/7		6 + PE acc. to EN 175201-804
	Code 5		11 + PE acc. to EN 175201-804
Wiring min.	Code 0/7	[mm²]	7 x 1.0 (AWG 16) overall braid shield
	Code 5	[mm²]	8 x 1.0 (AWG 16) overall braid shield
Wiring length max.		[m]	50

[1] If valves with onboard electronics are used in safety-related parts of control systems, in case the safety function is requested, the valve electronics voltage supply is to be switched off by a suitable switching element with sufficient reliability.

[2] Flow rate for different Δp per control edge: $Q_x = Q_{Nom.} \cdot \sqrt{\frac{\Delta p_x}{\Delta p_{Nom.}}}$

Flow characteristics

(Electrically set to opening point 10 %) at Δp = 5 bar per metering edge

Spool type E01

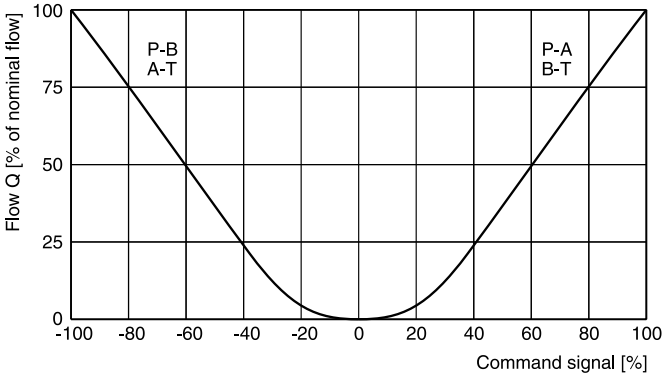

Spool type B31

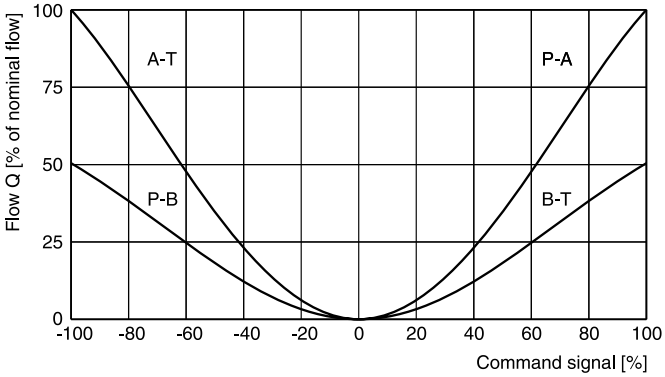

Spool type E50

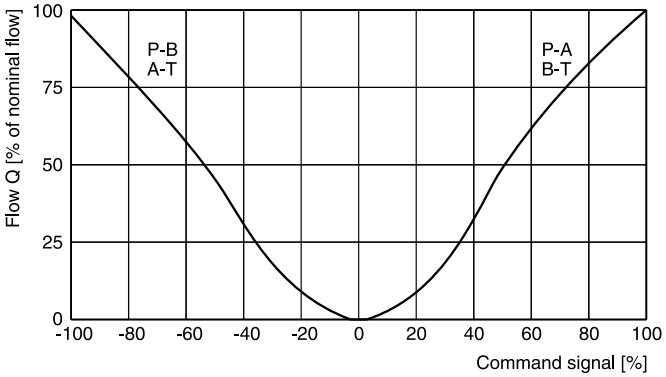

Spool type B60

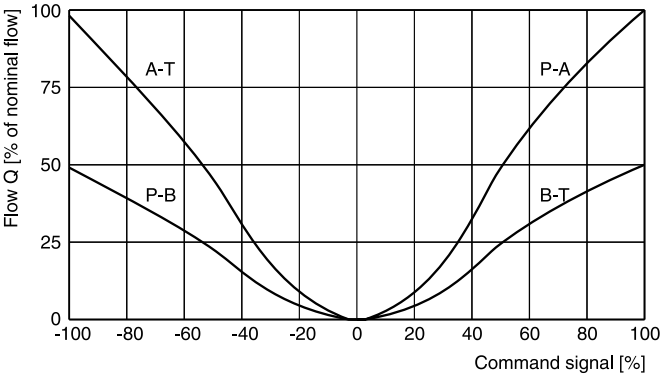

All characteristic curves measured with HLP46 at 50 °C.

3

Functional limits

25 %, 50 %, 75 % and 100 % command signal (symmetric flow).
At asymmetric flow a reduced flow limit has to be considered.

Spool type E01M

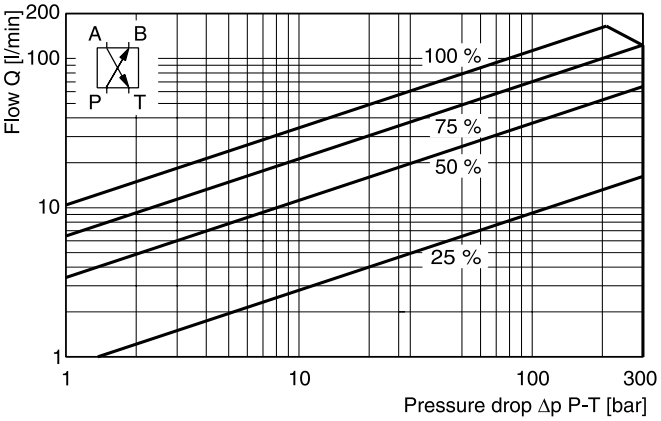

Spool type E01S

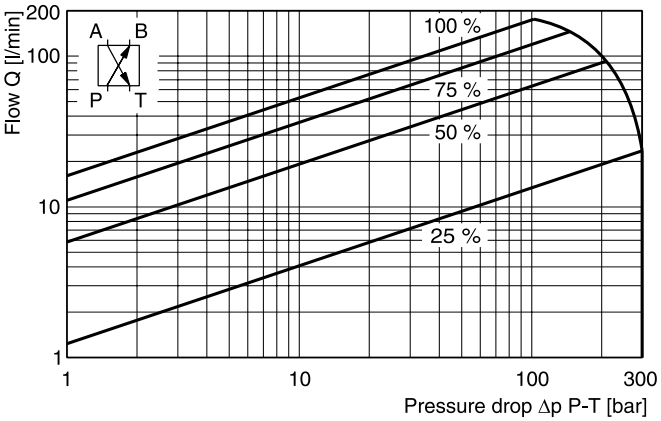

Spool type E01U

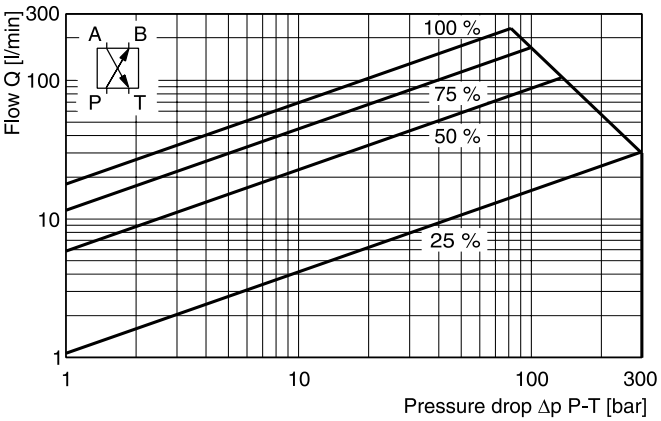

Frequency

± 5 %, ± 25 %, ± 90 % input signal

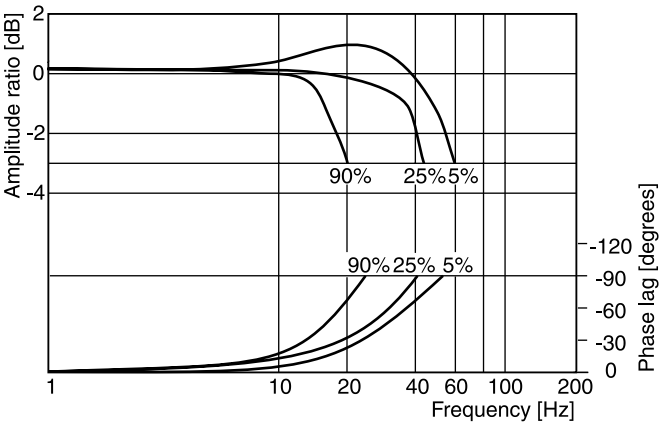

Step response

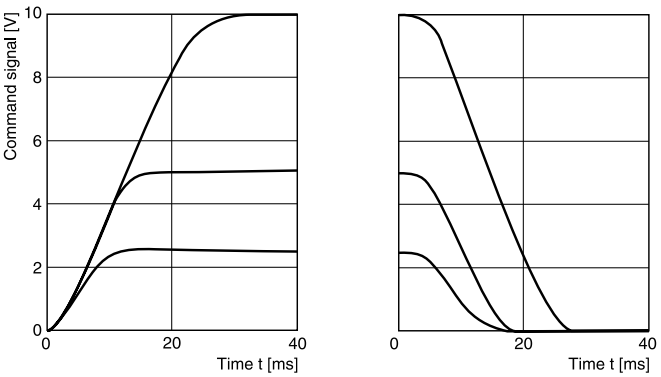

All characteristic curves measured with HLP46 at 50 °C.

Code 0, 3
6 + PE acc. to EN 175201-804

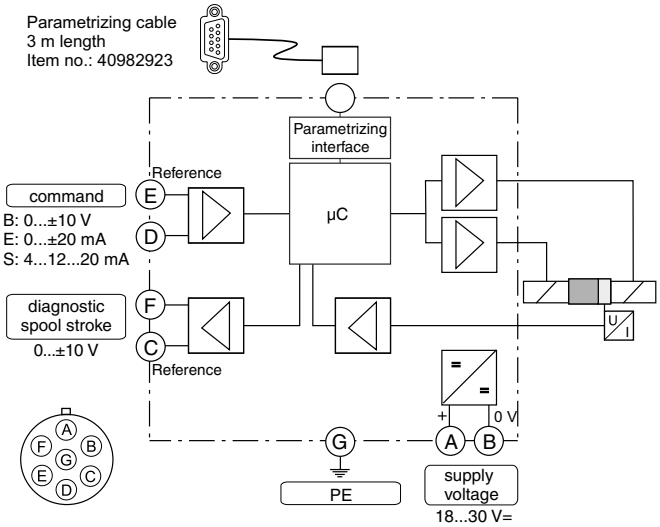

Code 5
11 + PE acc. to EN 175201-804

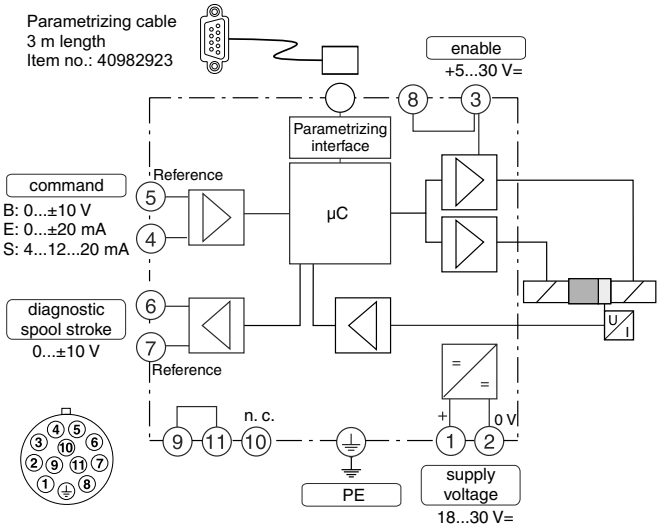

Code 1, 7
6 + PE acc. to EN 175201-804 + enable

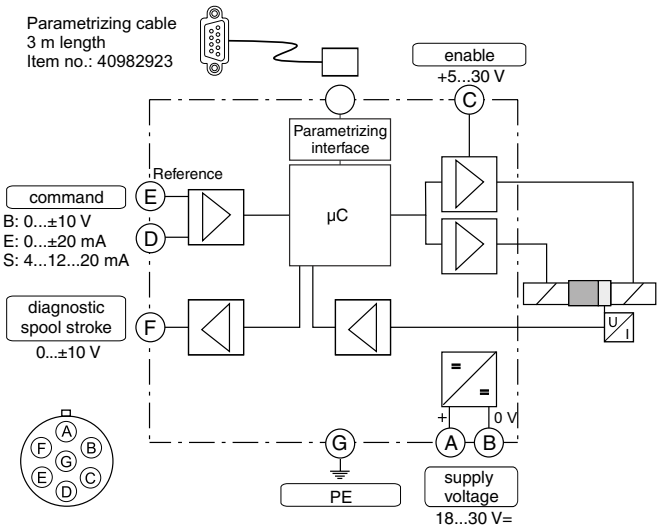

3

3

ProPxD interface program

The ProPxD software permits comfortable parameter setting for the module electronics. Via the clearly arranged entry mask the parameters can be noticed and modified. Storage of complete parameter sets is possible as well as printout or record as a text file for further documentation. Stored parameter sets may be loaded anytime and transmitted to other valves. Inside the electronics a non-volatile memory stores the data with the option for recalling or modification.

The PC software can be downloaded free of charge at www.parker.com/propxd.

Features

- Comfortable editing of all parameters
- Depiction and documentation of parameter sets
- Storage and loading of optimized parameter adjustments
- Executable with all actual Windows® operating systems from Windows® XP upwards
- Plain communication between PC and electronics via serial interface RS232C

The parametrizing cable may be ordered under item no. 40982923.

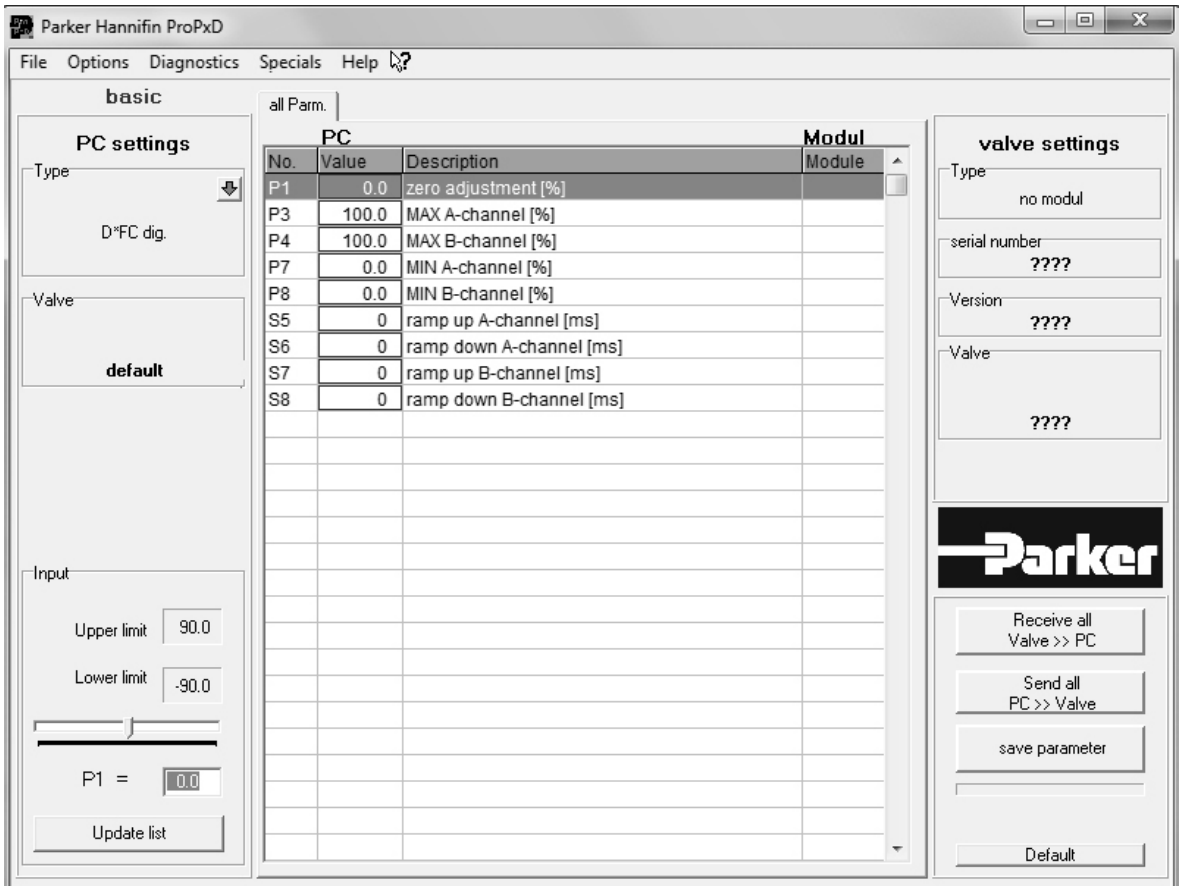

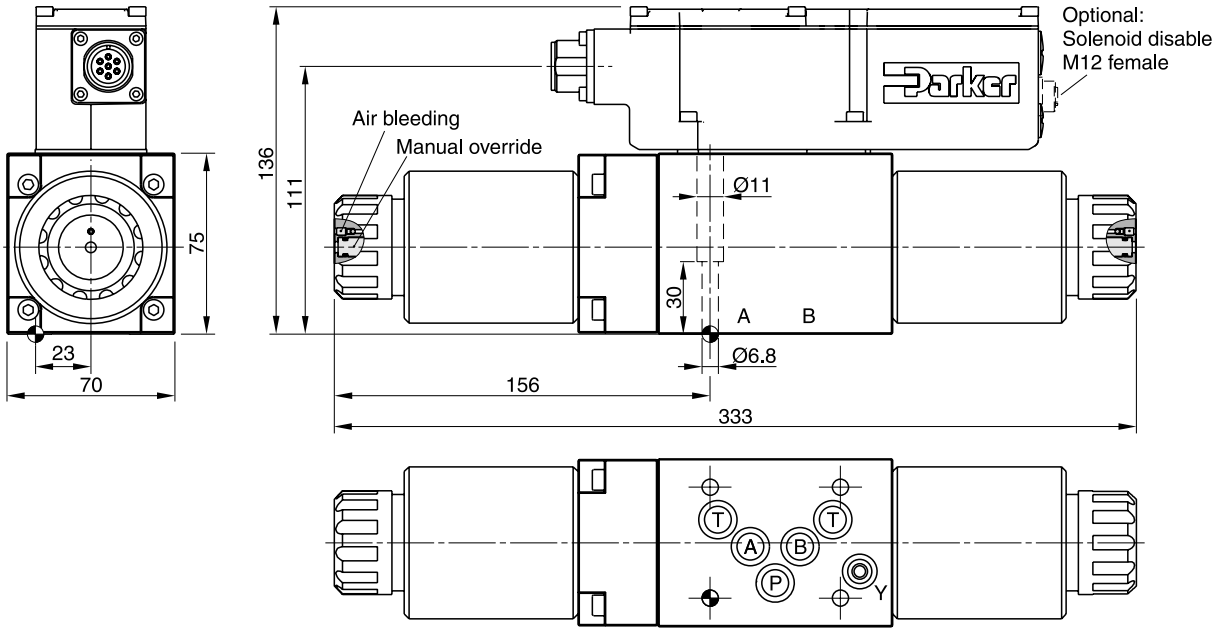

Port Y plugged

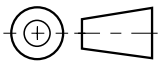

Surface finish	Kit			Kit NBR
$R_{max}6.3$ 0.01/100	BK385	4x M6x40 ISO 4762-12.9	13.2 Nm ±15 %	NBR: SK-D3FC FPM: SK-D3FC-V

The pilot operated proportional directional valves D*1FC with position feedback are available in 4 sizes:
D31FC - NG10 (CETOP 05)
D41FC - NG16 (CETOP 07)
D91FC - NG25 (CETOP 08)
D111FC - NG32 (CETOP 10)

The digital onboard electronics is situated in a robust metal housing, which allows the usage under rough environmental conditions.

The nominal values are factory set. The parametrizing cable to connect to a serial RS232 interface is available as accessory.

The innovative integrated regenerative function into the A-line (optional) allows energy saving circuits for differential cylinders. The hybrid version can be switched between regenerative mode and standard mode at any time.

Features

- Progressive flow characteristics for sensitive adjustment
- Low hysteresis
- High dynamics
- High flow capacity
- Centre position monitoring optional
- Energy saving A-regeneration optional
- Switchable hybrid version optional

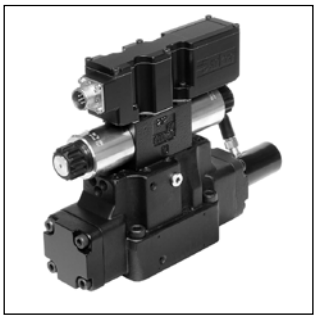

D41FC

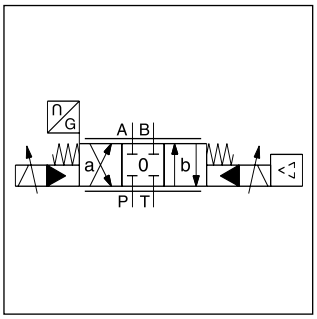

Standard D*1FC

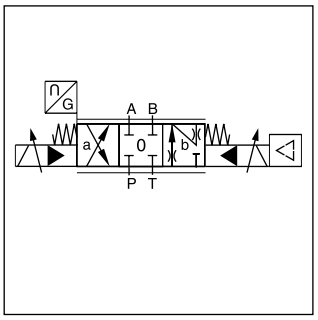

A-regeneration D*1FCR

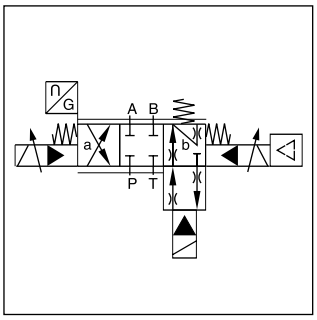

Hybrid D*1FCZ

D41FC

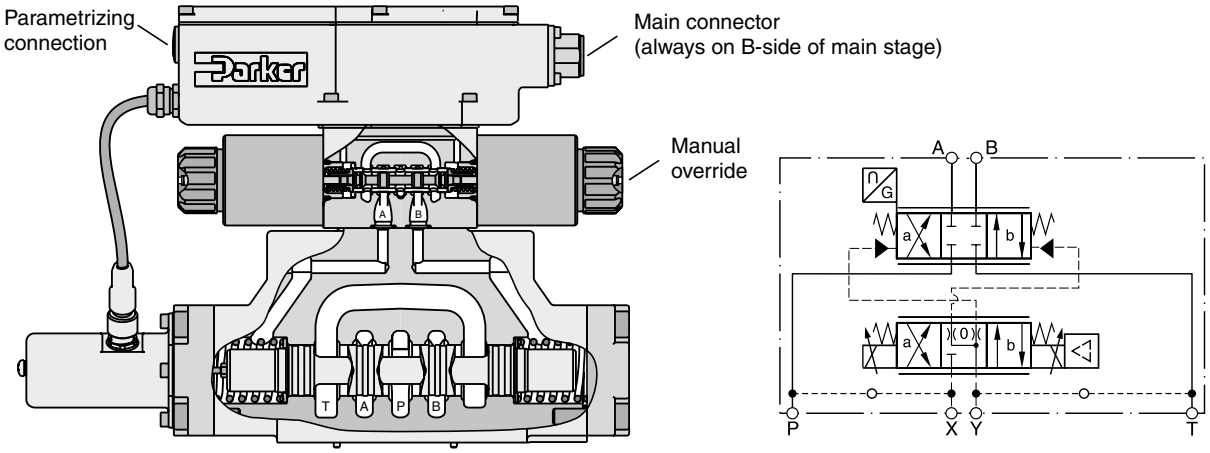

D*1FCR and D*1FCZ

Regenerative valve D*1FCR

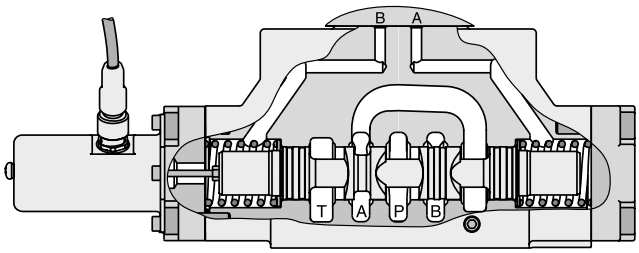

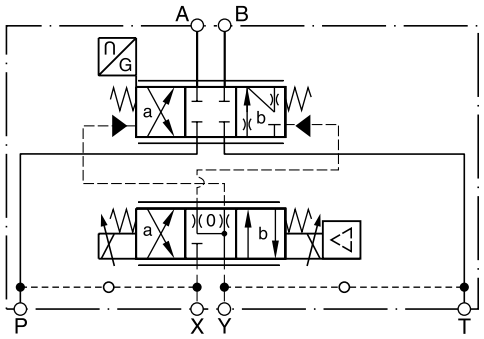

Hybrid valve D*1FCZ

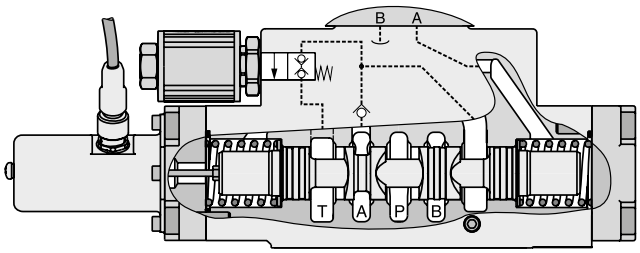

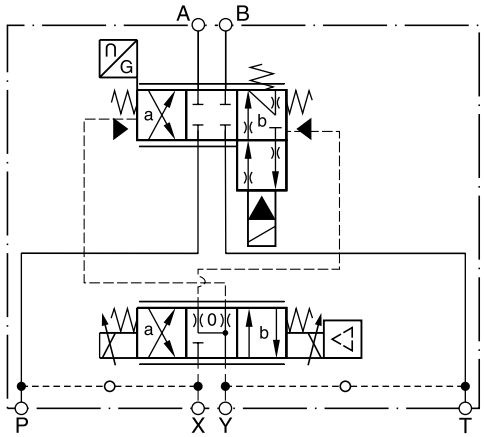

D*1FCR (regenerative valve)
Cylinder extending
(high speed)

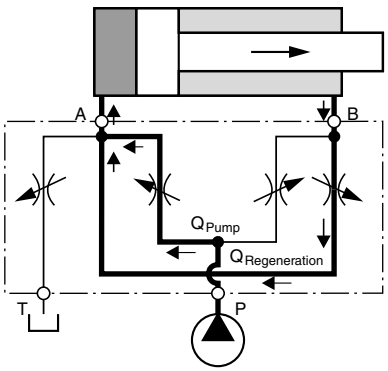

D*1FCZ (hybrid valve)
Cylinder extending
regenerative mode
(high speed)

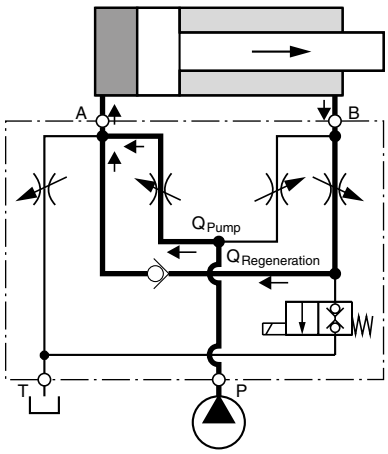

Cylinder extending
standard mode
(high force)

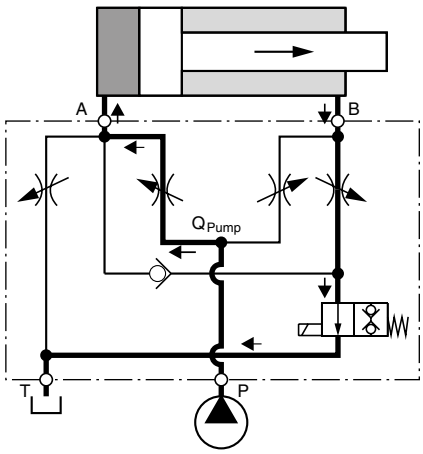

Flow rate in % of nominal flow

Size	Spool	Port					
		A-T	P-A	P-B	B-A (R-valve)	B-A (hybrid)	B-T (hybrid)
D41FCR/Z	31/32	100 %	50 %	100 %	50 %	45 %	20 %
D91FCR/Z	31/32	100 %	50 %	100 %	50 %	50 %	25 %
D111FCR/Z	31/32	100 %	50 %	100 %	50 %	50 %	20 %

D		1	F	C			C						
Directional control valve	Size	NG06 pilot	Proportional control	Integrated electronics with position feedback	Function	Flow	Spool position on power down	Pilot connection	Seal	Command signal	Electronic option	Valve option	Design series (not required for ordering)

3

Code	Nominal size
3	NG10 / CETOP 05
4	NG16 / CETOP 07
9 [1]	NG25 / CETOP 08
11	NG32 / CETOP 10

Spool position on power down

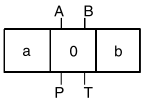

Code	Valve option
0	Standard for spool type B, E R
8 [6][7][8]	Monitor switch
L [5]	Hybrid valve 24V normally closed for spool type Z

Code	Electronic option [4]
0	6+PE acc. EN175201-804
5	11+PE acc. EN175201-804
7	6+PE + enable acc. EN175201-804

Code	Command signal	Function
B	0...±10 V	0...+10 V P -> B
E	0...±20 mA	0...+20 mA P -> B
K	0...±10 V	0...+10 V P -> A
S	4...20 mA	12...20 mA P -> A

Code	Seal
N	NBR
V	FPM

Code	Inlet	Drain
1	Internal	External
2	External	External
4	Internal	Internal
5	External	Internal

Standard		Regenerative function [2]		Hybrid function [2][3]	
Code	Spool type	Code	Spool type	Code	Spool type
Overlap		Overlap		Overlap	
E01	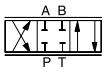				
E02	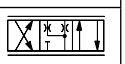				
B31	$Q_B = Q_A/2$ 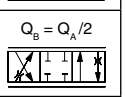	R31	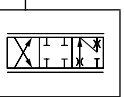	Z31	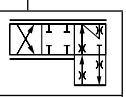
B32	$Q_B = Q_A/2$ 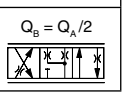	R32	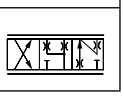	Z32	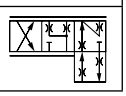

Code	Flow [l/min] at Δp = 5 bar per metering edge			
	D31	D41	D91	D111
D	90	—	—	—
E	120	—	—	—
F	—	200	—	—
H	—	—	450	—
L	—	—	—	1000

Short delivery time for all variations

Parametrizing cable OBE → RS232, item no. 40982923

[1] With enlarged connections Ø 32 mm.
[2] For regenerative and hybrid function at D31FC (NG10) please refer solutions with sandwich- and adaptor plates "A10-1664 / A10-1665L / H10-1662 / H10-1666L" in chapter 12.

D31FC spool type: R31 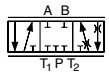 R32 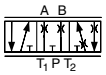

[3] Not for D31FC.
[4] Please order plugs separately, see accessories .
[5] See page "regenerative and hybrid function" (not for D31FC).
[6] Not for D111FCZ*.
[7] Monitor switch for hybrid valves: code 8 includes options of code L (24 V normally closed).
[8] Please order female connector M12x1 separately (see accessories, female connector M12x1 (order no.: 5004109).

General					
Design		Pilot operated DC valve			
Actuation		Proportional solenoid			
Size		**NG10 (CETOP 05)**	**NG16 (CETOP 07)**	**NG25 (CETOP 08)**	**NG32 (CETOP 10)**
		D31	**D41**	**D91**	**D111**
Mounting interface		DIN 24340 / ISO 4401 / CETOP RP121 / NFPA			
Mounting position		unrestricted			
Ambient temperature	[°C]	-20...+60			
$MTTF_D$ value [1]	[years]	75			
Weight	[kg]	9.0	12.5	21.0	68.5
Vibration resistance	[g]	10 Sinus 5...2000 Hz acc. IEC 68-2-6 10 (RMS) Random noise 20...2000 Hz acc. IEC 68-2-36 15 Shock acc. IEC 68-2-27			
Hydraulic					
Max. operating pressure	[bar] [bar]	Pilot drain internal: P, A, B, X 350; T, Y 210 Pilot drain external: P, A, B, T, X 350; Y 210			
Fluid		Hydraulic oil according to DIN 51524...535, other on request			
Fluid temperature	[°C]	-20...+60 (NBR: -25...+60)			
Viscosity permitted	[cSt] / [mm²/s]	20...400			
recommended	[cSt] / [mm²/s]	30...80			
Filtration		ISO 4406; 18/16/13			
Nominal flow at Δp=5 bar per control edge [2]	[l/min]	90 / 120	200	450	1000
Leakage at 100 bar, main stage	[ml/min]	200	200	600	1000
pilot stage	[ml/min]	<100			
Opening point	[%]	set to 10 command signal (see flow characteristics)			
Pilot supply pressure	[bar]	20 - 350			
Pilot flow, step response	[l/min]	2.9	4.1	6.7	15
Static / Dynamic					
Step response at 100 % step [3]	[ms]	35	37	66	120
Hysteresis	[%]	≤ 0.1			
Temperature drift	[%/K]	< 0.005			
Sensitivity	[%]	≤ 0.05			

[1] If valves with onboard electronics are used in safety-related parts of control systems, in case the safety function is requested, the valve electronics voltage supply is to be switched off by a suitable switching element with sufficient reliability.

[2] Flow rate for different Δp per control edge: $Q_x = Q_{Nom.} \cdot \sqrt{\frac{\Delta p_x}{\Delta p_{Nom.}}}$

[3] Measured with load (210 bar pressure drop / two control edges)

3

Electrical characteristics			
Duty ratio		[%]	100
Protection class			IP65 in accordance with EN 60529 (with correctly mounted plug-in connector)
Supply voltage/ripple DC		[V]	18...30, electric shut-off at < 17, ripple < 5 % eff., surge free
Current consumption max.		[A]	2.0
Pre fusing medium lag		[A]	2.5
Command signal			
Code K (B)	Voltage	[V]	10...0...-10, ripple <0.01 % eff., surge free, 0...+10 V P—>A (P—>B)
	Impedance	[kOhm]	100
Code E	Current	[mA]	20...0...-20, ripple <0.01 % eff., surge free, 0...+20 mA P—>B
	Impedance	[Ohm]	< 250
Code S	Current	[mA]	4...12...20, ripple <0.01 % eff., surge free, 12...20 mA P—>A < 3.6 mA = enable off, > 3.8 mA = enable on acc. to NAMUR NE43
	Impedance	[Ohm]	< 250
Differential input max.		[V]	
Code 0/7			30 for terminal D and E against PE (terminal G) 11 for terminal D and E against 0 V (terminal B)
Code 5			30 for terminal 4 and 5 against PE (terminal ⏚) 11 for terminal 4 and 5 against 0 V (terminal 2)
Adjustment ranges	Min	[%]	0...50
	Max	[%]	50...100
	Ramp	[s]	0...32.5
Interface			RS 232, parametrizing connection 5pole
Enable signal (code 5/7)		[V]	5...30
Diagnostic signal		[V]	+10...0...-10 / +12.5 error detection, rated max. 5 mA
EMC			EN 61000-6-2, EN 61000-6-4
Electrical connection	Code 0/7		6 + PE acc. to EN 175201-804
	Code 5		11 + PE acc. to EN 175201-804
Wiring min.	Code 0/7	[mm²]	7 x 1.0 (AWG20) overall braid shield
	Code 5	[mm²]	8 x 1.0 (AWG20) overall braid shield
Wiring length max.		[m]	50
Electrical characteristics hybrid option			
Duty ratio		[%]	100
Protection class			IP 65 in accordance with EN 60529 (with correctly mounted plug-in connector)
Supply voltage		[V]	24
Tolerance supply voltage		[%]	±10
Current consumption		[A]	1.21
Power consumption		[W]	29
Solenoid connection			Connector as per EN 175301-803
Wiring min.		[mm²]	3 x 1.5 recommended
Wiring length max.		[m]	50 recommended

With electrical connections the protective conductor (PE ⏚) must be connected according to the relevant regulations.

D*1FC B/E Flow characteristics

(set to opening point 10 %) at Δp = 5 bar per metering edge

D31FC, Spool code E01, E02, B31, B32

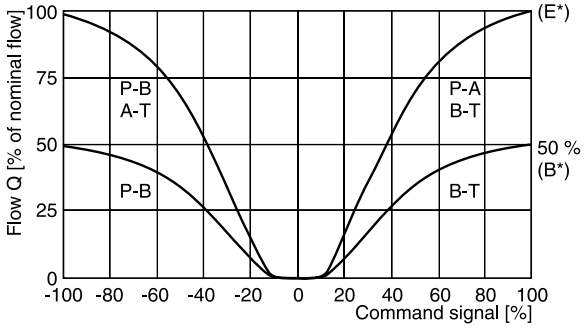

D41FC, Spool code E01, E02, B31, B32

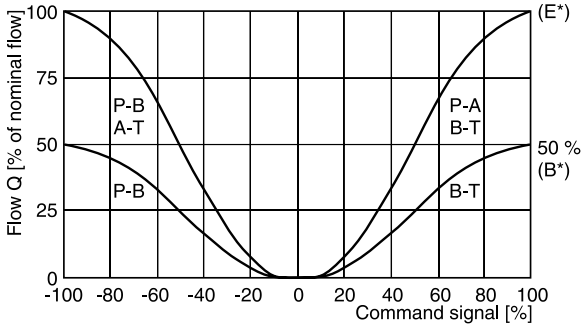

D91FC, Spool type E01, E02, B31, B32

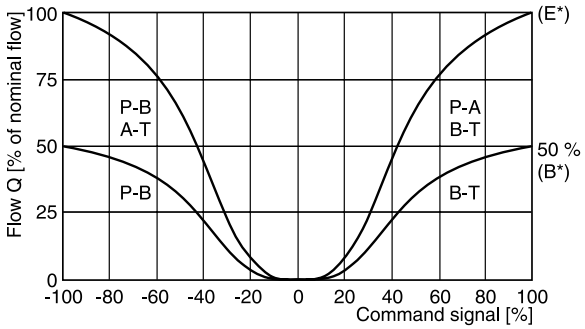

D111FC, Spool type E01, E02, B31, B32

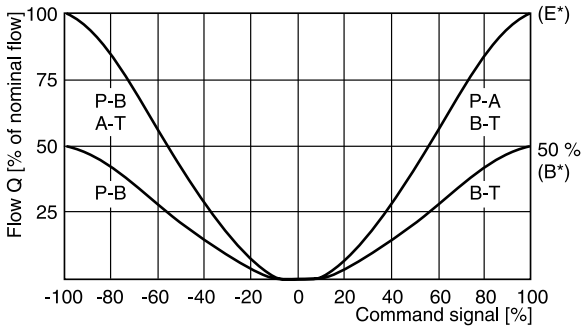

Flow characteristics D*1FCR/Z

(set to opening point 10 %) at Δp = 5 bar per metering edge

D31FC, Spool type R31, R32

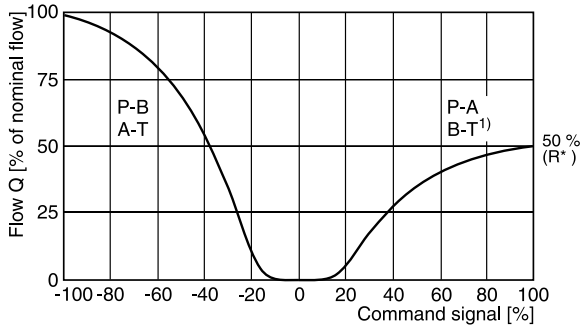

D41FC, Spool type R31, R32, Z31, Z32

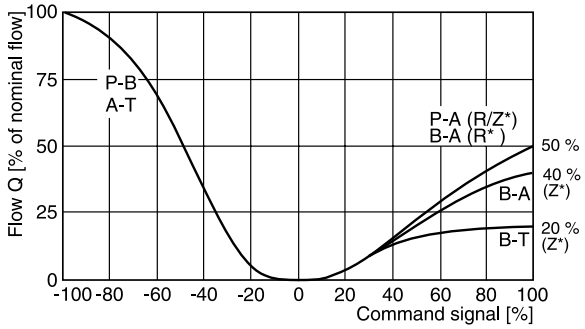

D91FC, Spool type R31, R32, Z31, Z32

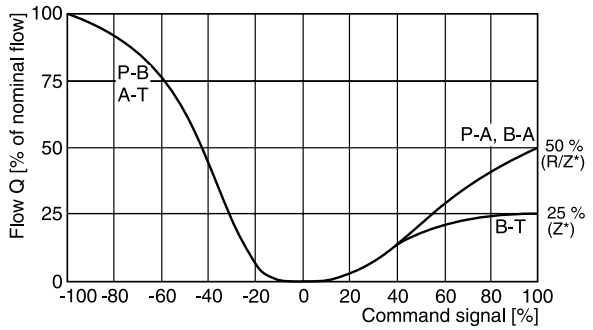

D111FC, spool type R/Z* on request

[1)] With 2 tank ports.

All characteristic curves measured with HLP46 at 50 °C.

3

Electrical characteristics of position control M12x1 as per IEC 61076-2-101

Supply voltage	[VDC]	24
Tolernace supply voltage	[%]	±20
Ripple supply voltage	[%]	≤10
Polarity protection	[V]	300
Current consumption without load	[mA]	≤20
Switching hysteresis	[mm]	<0.06
Max. output current per channel, ohmic	[mA]	250
Ambient temperature	[°C]	-20 … +60
Protection		IP65 acc. EN 60529
CE conform		EN 61000-4-2 / EN 61000-4-4 / EN 61000-4-6 [1] / ENV 50140 / ENV 50204
Min. distance to next AC solenoid	[m]	0.1
Interface		M12x1 acc. to IEC 61076-2-101

M12x1 connector pin assignment

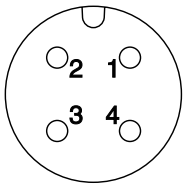

1 + US 19.2...28.8 V
2 Output B (normally closed)
3 0 V
4 Output A (normally closed)

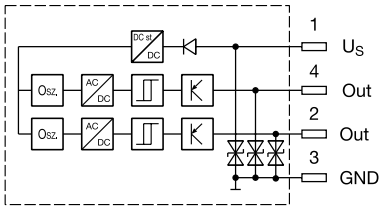

Outputs: Open collector

Signal	Output A (pin 4)	Output B (pin 2)
neutral	closed	closed
	open	closed
	closed	open

The neutral position is monitored. The signal changes after less than 10 % of the spool stroke.

Please order female connector M12x1 separately (see accessories, female connector M12x1 (order no.: 5004109).

Wiring according EN 175201-804

Code 0/3, 6+PE

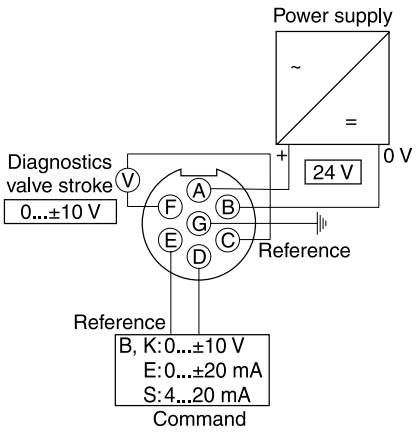

Code 5, 11+PE

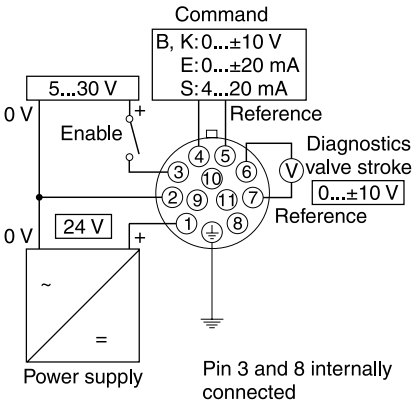

Pin 3 and 8 internally connected

Pin 9 and 11 internally connected

Pin 10 not connected

Code 1/7, 6+PE + enable

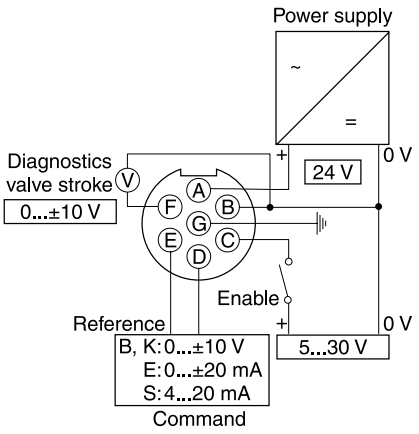

[1] Only guaranted with screened cable and female connector

ProPxD interface program

The ProPxD software allows quick and easy setting of the digital valve electronics. Individual parameters as well as complete settings can be viewed, changed and saved via the comfortable user interface. Parameter sets saved in the non-volatile memory can be loaded to other valves of the same type or printed out for documentation purposes.

The PC software can be downloaded free of charge at www.parker.com/isde – see page “Support" or directly at www.parker.com/propxd.

Features

- Comfortable editing of valve parameters
- Saving and loading of customized parameter sets
- Executable with all Windows® operating systems from Windows® XP upwards
- Simple communication between PC and valve electronics via serial interface RS232C

The valve electronics cannot be connected to a PC with a standard USB cable – this can result in damages of PC and/or valve electronics.

The parametrizing cable may be ordered under item no. 40982923.

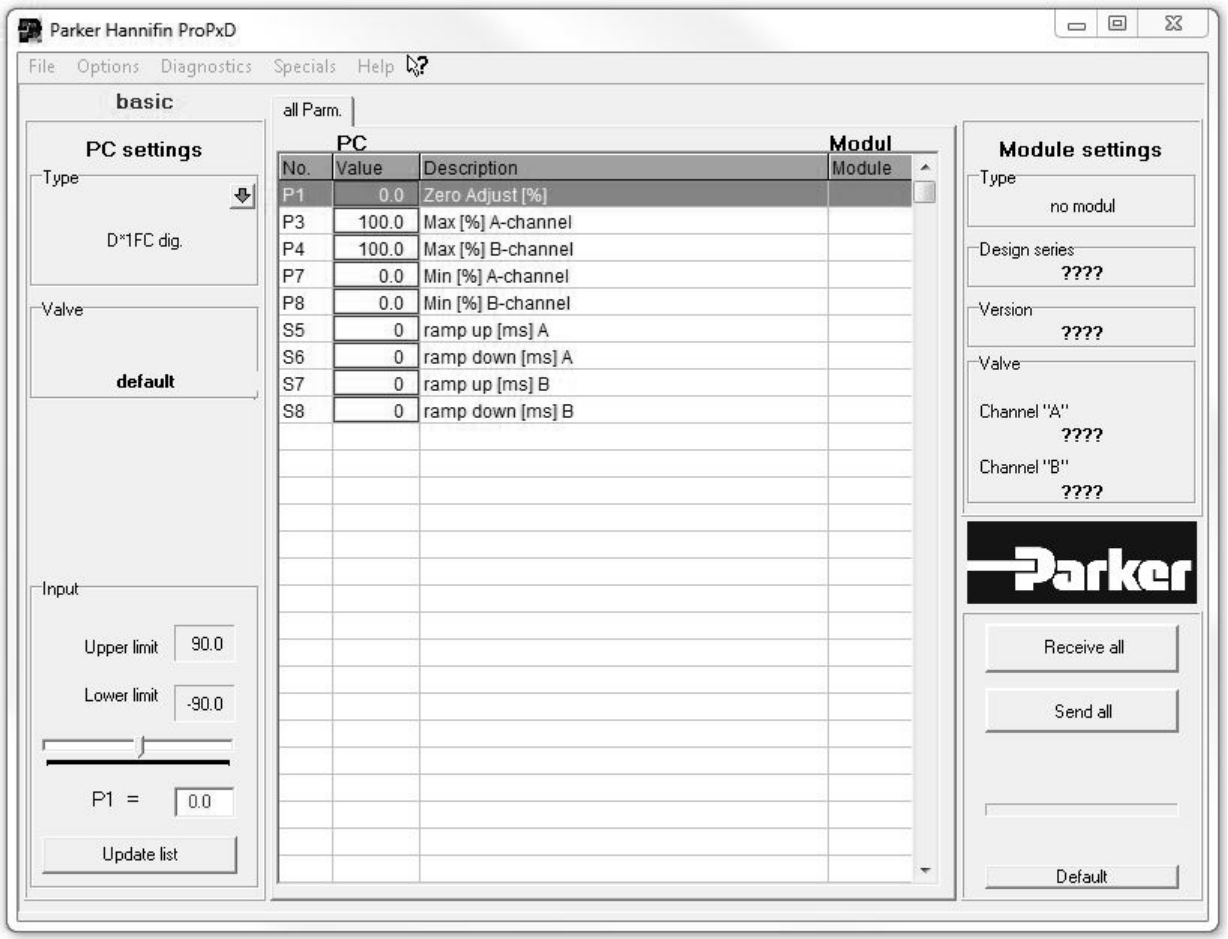

Pilot oil inlet (supply) and outlet (drain)

○ **open,** ● **closed**

Pilot oil Inlet	Drain	B	C
internal	external	○	●
external	external	●	●
internal	internal	○	○
external	internal	●	○

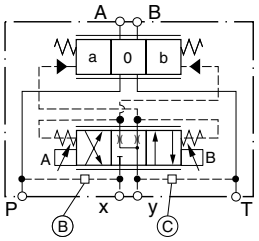

3

D31FCB/E

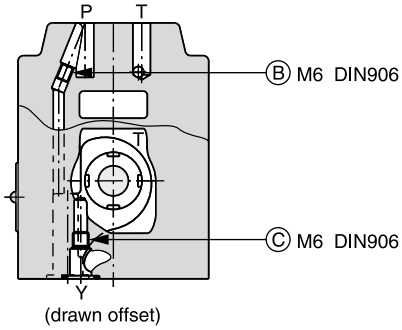

(drawn offset)

D31FCR

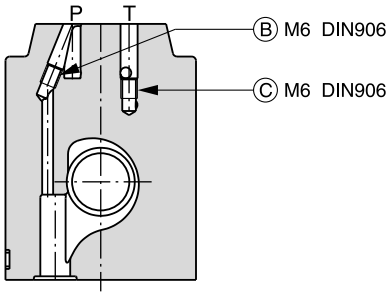

D41FCB/E

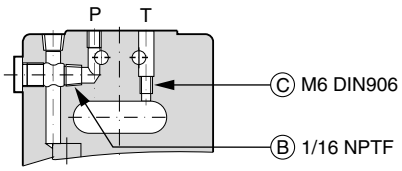

D41FCR

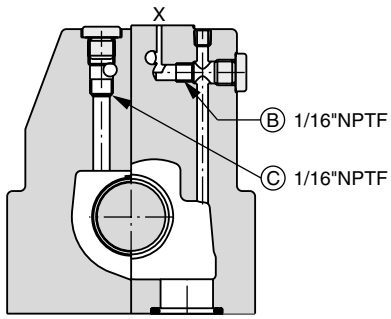

(drawn offset)

D41FCZ

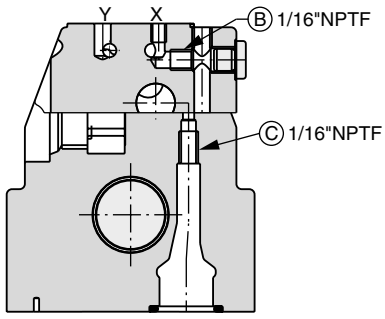

(drawn offset)

D91FCB/E

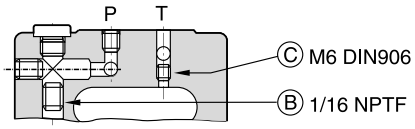

D91FCR

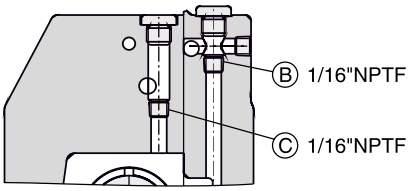

(drawn offset)

D91FCZ

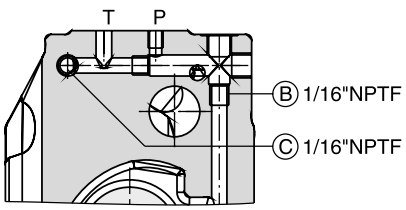

D111FCB/E

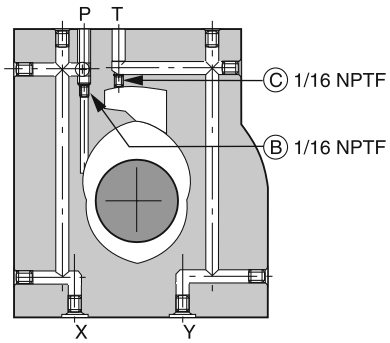

D111FCR

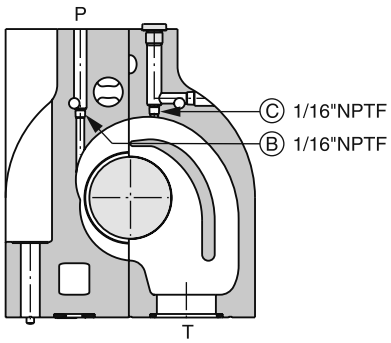

(drawn offset)

D111FCZ

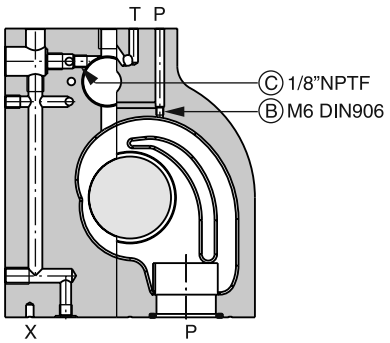

(drawn offset)

D31FC

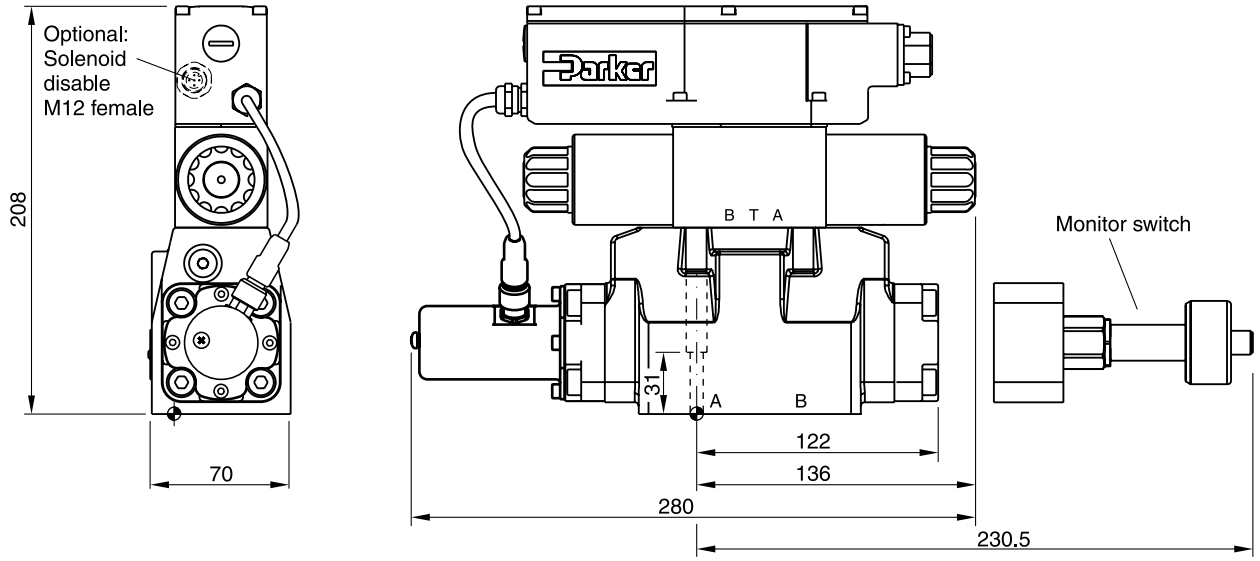

Regenerative and hybrid function with additional plate "H10-1666L / H10-1662 / A10-1664 / A10-1665L", see chapter 12.

Surface finish	Kit			Kit
$R_{max}6.3$ 0.01/100	BK385	4x M6x40 ISO 4762-12.9	13.2 Nm ±15 %	NBR: SK-D31FC FPM: SK-D31FC-V

D41FC

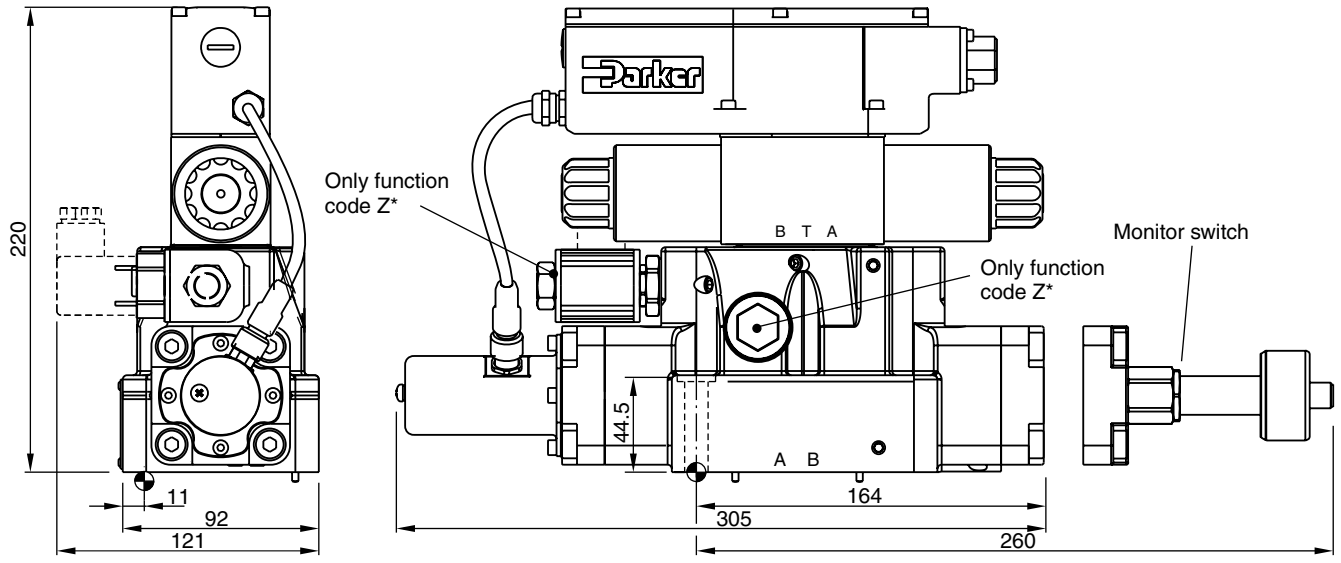

Surface finish	Kit			Kit
$R_{max}6.3$ 0.01/100	BK320	2x M6x55 4x M10x60 ISO 4762-12.9	13.2 Nm ±15 % 63 Nm ±15 %	NBR: SK-D41FC FPM: SK-D41FC-V

3

D91FC

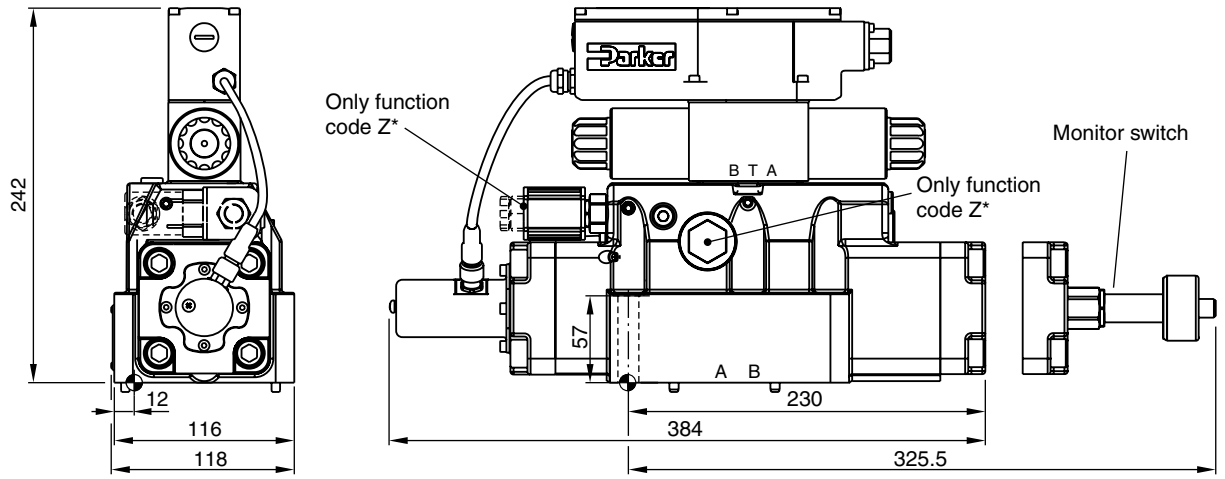

Surface finish	Kit			Kit
$\sqrt{R_{max}6.3}$ 0.01/100	BK360	6x M12x75 ISO 4762-12.9	108 Nm ±15 %	NBR: SK-D91FC FPM: SK-D91FC-V

D111FC

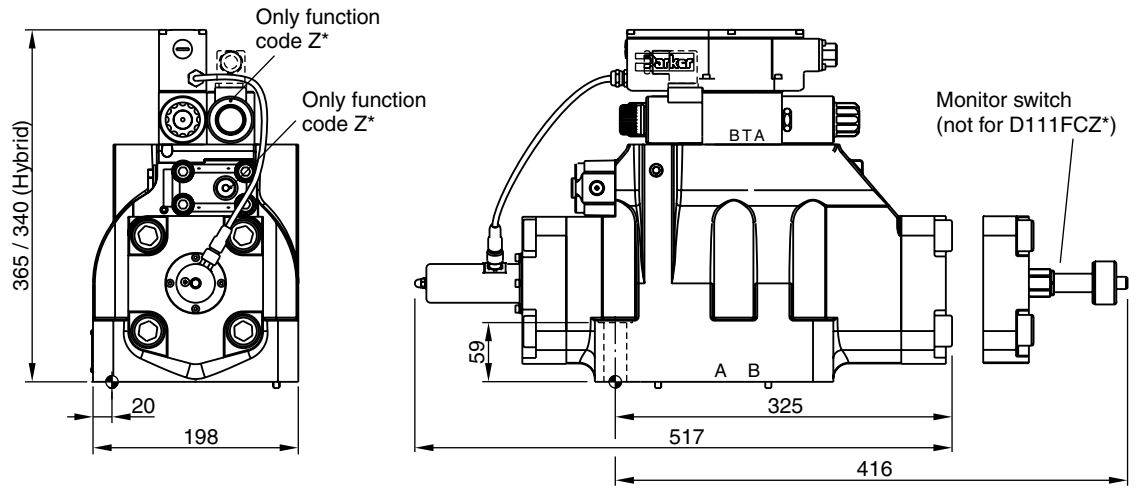

Surface finish	Kit			Kit
$\sqrt{R_{max}6.3}$ 0.01/100	BK386	6x M20x90 ISO 4762-12.9	517 Nm ±15 %	NBR: SK-D111FC FPM: SK-D111FC-V

Introduction

The new proportional valves with position feedback series D*FC (direct operated) and D*1FC (pilot operated) with EtherCAT interface fulfill the requirements of modern communication between valve and main control. Due to high data transmission speed and short cycle times, also demanding control functions can be realized within the fieldbus system.

The valve is actuated and monitored by the EtherCAT interface. Actual value (spool position), temperature, operating hours and different error messages are available as diagnostic signals. The valve parameters are factory set and can be adapted with the Parker ProPxD software via the parametrizing interface.

In addition to the fieldbus communication, the valves provide the range of functions of the standard version including analogue command signal and diagnostic spare stroke. Thus they can be operated independent of the fieldbus control, particularly during commissioning and maintenance.

The option with EtherCAT is available for the series:

- D1FC, D3FC
- D31FC, D41FC, D91FC, D111FC



D1FC with EtherCAT

EtherCAT®

3

Features EtherCAT interface

- EtherCAT interface, 2x M12x1 connector 4-Pin (EtherCAT In and EtherCAT Out)
- Progressive flow characteristics for sensitive adjustment
- Low hysteresis
- High dynamics
- High flow capacity
- Onboard electronics

Technical Data

Electrical			
Duty ratio		[%]	100
Protection class			IP65 in accordance with EN 60529 (with correctly mounted plug-in connector)
Supply voltage/ripple		[V]	18...30, electric shut-off at < 17, ripple < 5 % eff., surge free
Current consumption max.		[A]	2.0 (D1FC, D*1FC), 3.5 (D3FC)
Pre fusing medium lag		[A]	2.5 (D1FC, D*1FC), 4.0 (D3FC)
Differential input		[V]	30 for terminal D and E against PE (terminal G)
Diagnostic signal		[V]	+10...0...-10 / +12.5 error detection
EMC			EN 61000-6-2, EN 61000-6-4
Electrical connection			6 + PE acc. to EN 175201-804
EtherCAT interface			2 x socket M12x1: 5p acc. to IEC61076-2-101
Wiring min.		[mm²]	3 x 1.0 (AWG16) overall braid shield
Wiring length max.		[m]	50
Wiring EtherCAT			acc. to CiA DS-301 Version 4 / Twisted pair cable acc. to ISO11898
EtherCAT profiles			Communication Layer IEC 61158-x-12, 301 Version 4 Device Profile in accordance with CIA DS - 408 Version 1.5.2 CANopen over EtherCAT (object dictionary)
Functionality			One PDO (Receive) One PDO (Transmit) BUS-cycle time down to 0.250 mSec.
Parameterization			
Interface			RS 232, parametrizing cable order code 40982923
Interface program			ProPxD (see www.parker.com/propxd)
Adjustment ranges	Min	[%]	0...50
	Max	[%]	50...100
	Ramp	[%]	0...32.5

Direct Operated Proportional DC Valve

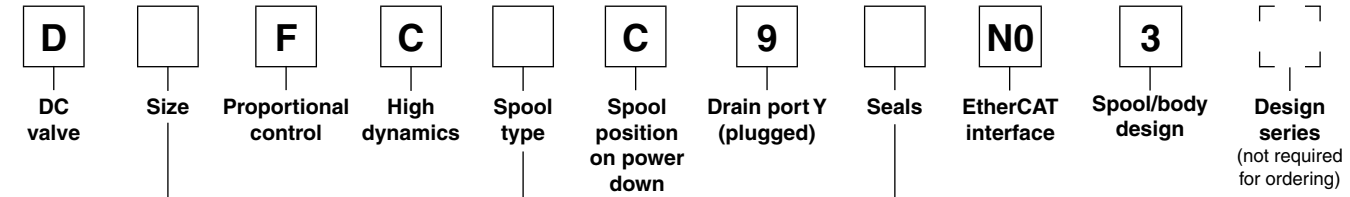

Code	Size
1	NG06 / CETOP 03
3	NG10 / CETOP 05

See ordering code for valve series without EtherCAT

Pilot Operated Proportional DC Valve

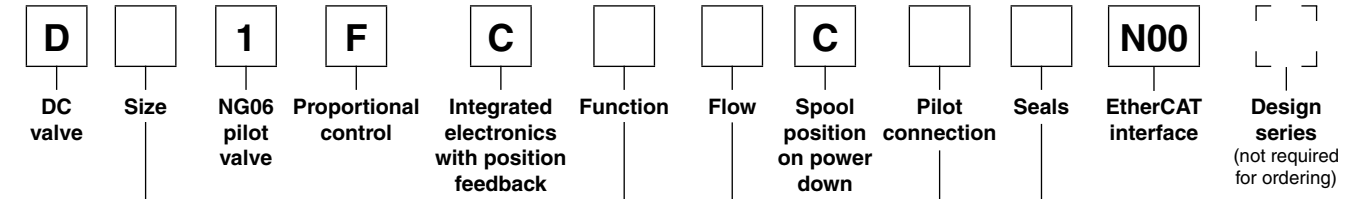

Code	Size
3	NG10 / CETOP 05
4	NG16 / CETOP 07
9	NG25 / CETOP 08
11	NG32 / CETOP 10

See ordering code for valve series without EtherCAT

Please order connector separately, see chapter 3 accessories.
Parametrizing cable OBE → RS232, item no. 40982923

Block diagram

EtherCAT

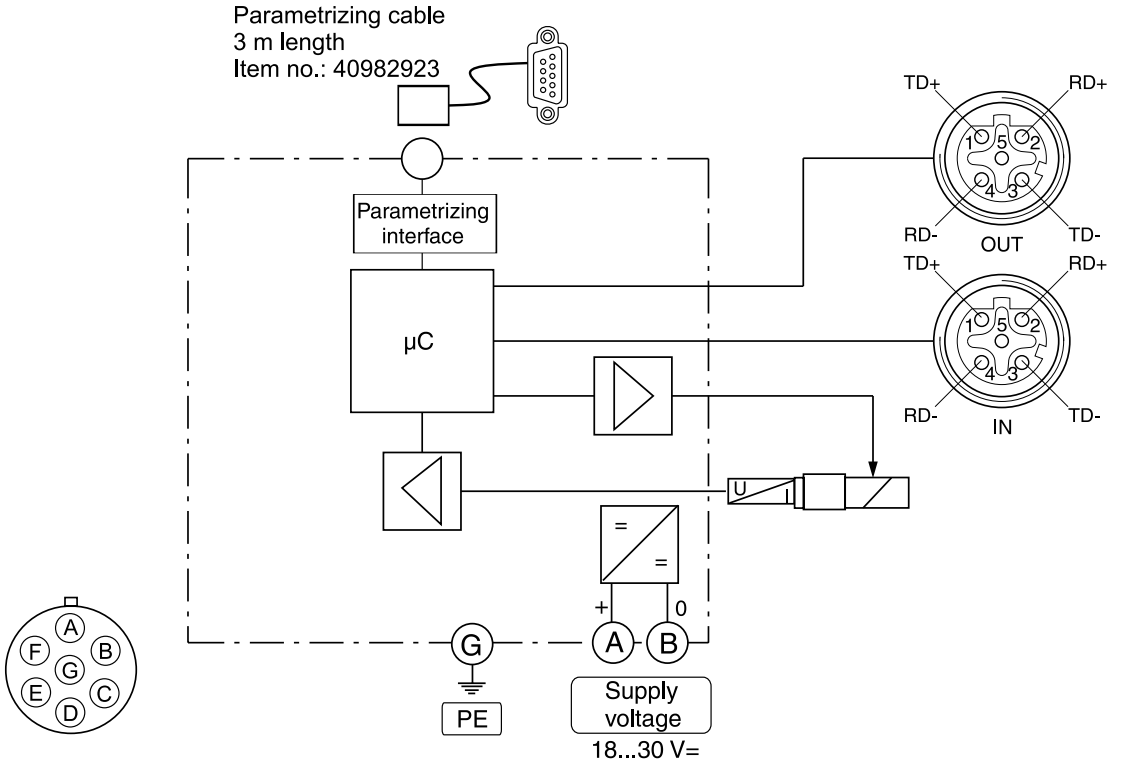

Dimensions D1FC with EtherCAT

EtherCAT EtherCAT

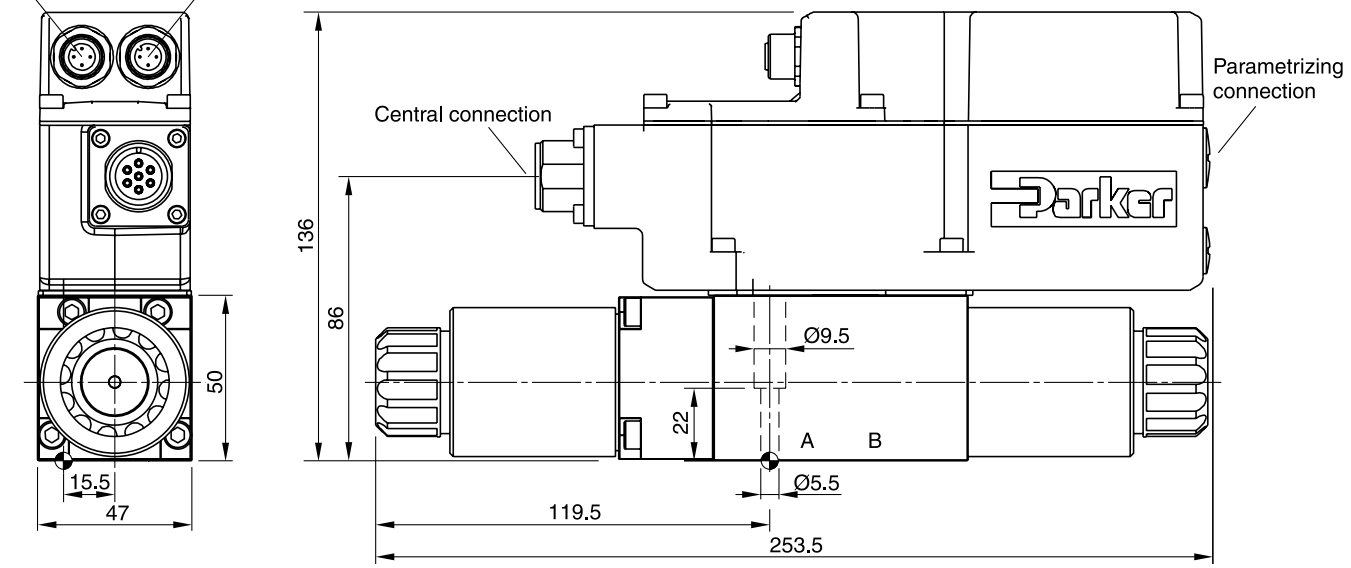

3

The direct operated control valve D1FP of the nominal size NG06 (CETOP 03) shows extremly high dynamics combined with maximum flow. It is the preferred choice for highest accuracy in positioning of hydraulic axis and controlling of pressure and velocity.

Driven by the patented VCD® actuator the D1FP reaches the frequency response of real servovalves. Compared with solenoid driven valves the D1FP can also be used in applications with pressure drops up to 350 bar across the valve. Because of the high flow capability the D1FP can be a substitute for NG10 valves in some cases.

At power-down the spool moves in a defined position. All common input signals are available.



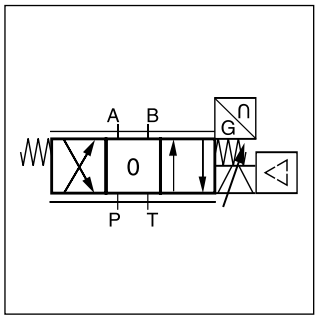

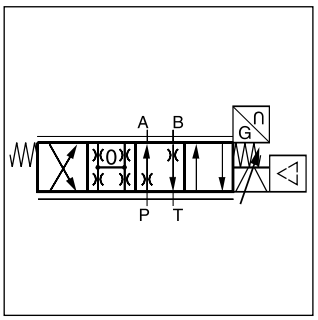

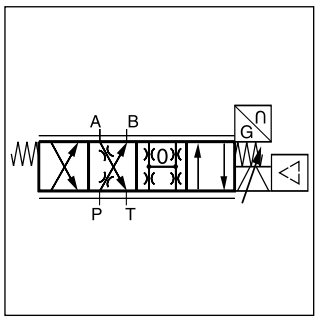

Features

- Real servovalve dynamics
  (-3 dB / 350 Hz at ±5 % input signal)
- No flow limit up to 350 bar pressure drop through the valve
- Max. tank pressure 350 bar
  (with external drain port y)
- High flow
- Defined spool positioning at power-down - optional
  P-A/B-T or P-B/A-T or center position
  (for overlapped spools)
- Onboard electronics

CE

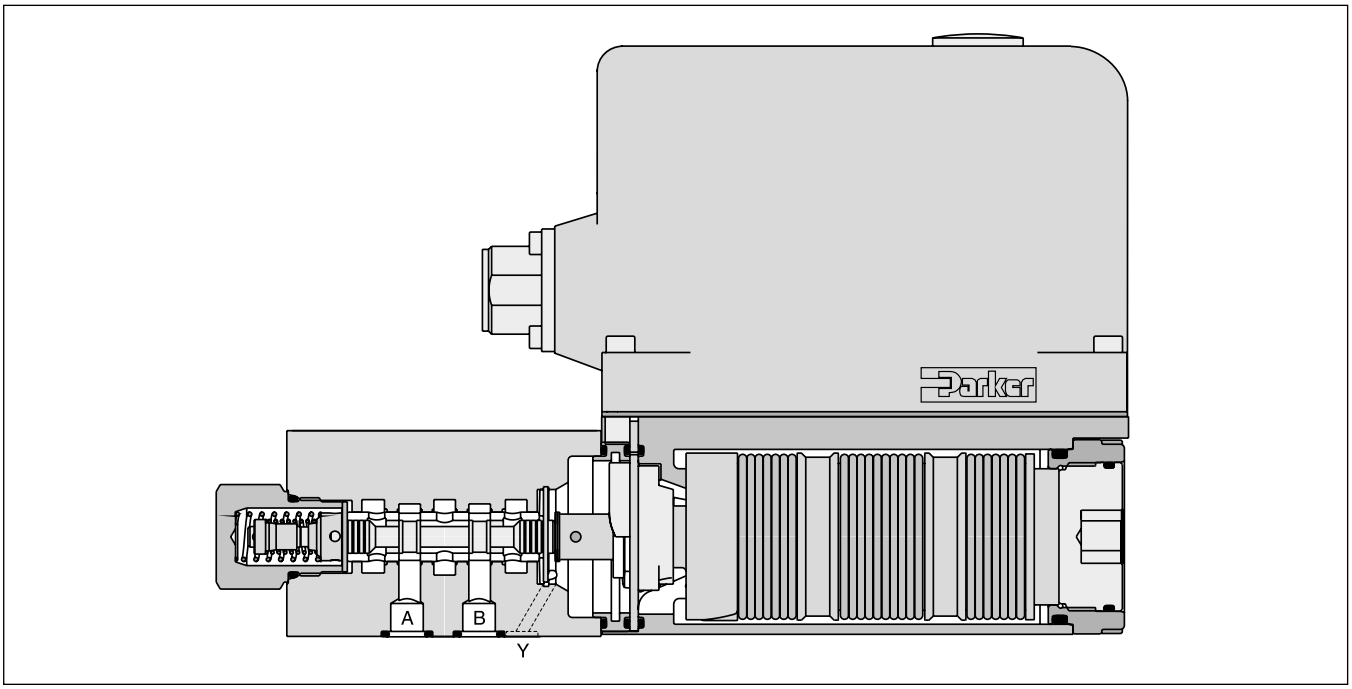

D	1	F	P			9				0	
Directional control valve	**Size DIN NG06 CETOP 03 NFPA D03**	**Proportional control**	**VCD**	**Spool type**	**Spool position on power down [1]**	**Y-port (plugged) [5]**	**Seals**	**Command signal**	**Electronics option**	**Spool/ sleeve design**	**Design series** (not required for ordering)

Code	Spool type	Flow [l/min] at Δp 35 bar per metering edge
	Zerolap	
E50B		**3**
E50C		**6**
E50F		**12**
E50G		**16**
E50H		**25**
E50M		**40**
B60C	$Q_B = Q_A/2$	**6 / 3**
B60F		**12 / 6**
B60G		**16 / 8**
B60H		**25 / 12.5**
B60M		**40 / 20**
	Underlap	
E55B		**3**
E55C		**6**
E55F		**12**
E55G		**16**
E55H		**25**
E55M		**40**
	Overlap	
E01B	A B P T	**3**
E01C		**6**
E01F		**12**
E01G		**16**
E01H		**25**
E01M		**40**
B31C	$Q_B = Q_A/2$	**6 / 3**
B31F		**12 / 6**
B31G		**16 / 8**
B31H		**25 / 12.5**
B31M		**40 / 20**
E02B		**3**
E02C		**6**
E02F		**12**
E02G		**16**
E02H		**25**
E02M		**40**
B32C	$Q_B = Q_A/2$	**6 / 3**
B32F		**12 / 6**
B32G		**16 / 8**
B32H		**25 / 12.5**
B32M		**40 / 20**

Code	Connection type
0	**6 + PE acc. EN175201-804**
5	**11 + PE acc. EN175201-804**
7	**6 + PE + Enable**

Code	Signal	Function
B	**+/- 10 V**	**0...+10 V -> P-A**
E	**+/- 20 mA**	**0...+20 mA -> P-A**
S	**4...20 mA**	**12...20 mA -> P-A**

Code	Seals
N	**NBR**
V	**FPM**
H	**for HFC fluid**

Code	Spool position at power down
A [2]	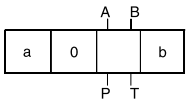
B [2]	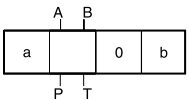
C [3]	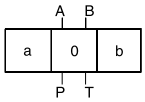
H [4]	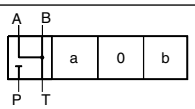
J [4]	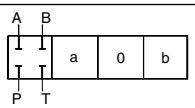

Short delivery time for all variations

Note:

Adapter plate for ISO 4401 to ISO 10372 size 04, Ordering code HAP04WV06-1661
Please order connector separately, see chapter 3 accessories.
Parametrizing cable OBE -> RS232, item no. 40982923

[1] On power down the spool moves in a defined position. This cannot be guaranteed in case of single flow path on the control edge A – T resp. B – T with pressure drops above 120 bar or contamination in the hydraulic fluid.

[2] Approx. 10 % opening, only zero lapped spools and underlap spools.

[3] Only for overlapped spools.

[4] Not for flow code M (40 l/min).

[5] Plug in the Y-port needs to be removed at tank pressure >35 bar.

3

General			
Design			Direct operated servo proportional DC valve
Actuation			VCD® actuator
Size			**NG06 / CETOP 03 / NFPA D03**
Mounting interface			DIN 24340 / ISO 4401 / CETOP RP121 / NFPA
Mounting position			unrestricted
Ambient temperature		[°C]	-20...+50
$MTTF_D$ value [1]		[years]	150
Weight		[kg]	3.6
Vibration resistance		[g]	10 Sinus 5...2000 Hz acc. IEC 68-2-6 10 (RMS) Random noise 20...2000 Hz acc. IEC 68-2-36 15 Shock acc. IEC 68-2-27
Hydraulic			
Max. operating pressure		[bar]	Ports P, A, B 350, port T 35 for internal drain, 350 for external drain, port Y 35 [2]
Fluid			Hydraulic oil according to DIN 51524 ... 535, other on request
Fluid temperature		[°C]	-20...+60 (NBR: -25...+60)
Viscosity	permitted	[cSt]/mm²/s]	20...400
	recommended	[cSt]/mm²/s]	30...80
Filtration			ISO 4406; 18/16/13
Nominal flow at Δp=35 bar per control edge [3]		[l/min]	3 / 6 / 12 / 16 / 25 / 40
Flow maximum		[l/min]	90 (at Δp=350 bar over two control edges)
Leakage at 100 bar		[ml/min]	<400 (zerolap spool); <50 (overlap spool)
Opening point		[%]	set to 23 commande signal (see flow characteristics)
Static / Dynamic			
Step response at 100 % step [4]		[ms]	<3.5
Frequency response (±5 % signal) [4]		[Hz]	350 (amplitude ratio -3 dB), 350 (phase lag -90°)
Hysteresis		[%]	<0.05
Sensitivity		[%]	<0.03
Temperature drift		[%/K]	<0.025
Electrical characteristics			
Duty ratio		[%]	100
Protection class			IP65 in accordance with EN 60529 (with correctly mounted plug-in connector)
Supply voltage/ripple		[V]	DC 22 ... 30, electric shut-off at < 19, ripple < 5 % eff., surge free
Current consumption max.		[A]	3.5
Pre-fusing		[A]	4.0 medium lag
Input signal			
Code B	Voltage	[V]	10...0...-10, ripple <0.01 % eff., surge free, 0...+10 V P->A
	Impedance	[kOhm]	100
Code E	Current	[mA]	20...0...-20, ripple <0.01 % eff., surge free, 0...+20 mA P->A
	Impedance	[Ohm]	<250
Code S	Current	[mA]	4...12...20, ripple <0.01 % eff., surge free, 12...20 mA P->A <3.6 mA = disable, >3.8 mA = according to NAMUR NE43
	Impedance	[Ohm]	<250
Differential input max.			
	Code 0	[V]	30 for terminal D and E against PE (terminal G)
	Code 5	[V]	30 for terminal 4 and 5 against PE (terminal ⏚)
	Code 7	[V]	30 for terminal D and E against PE (terminal G)
Enable signal (only code 5/7)		[V]	5...30, Ri = > 8 kOhm
Diagnostic signal		[V]	+10...0...-10 / +12.5 error detection, rated max. 5 mA
EMC			EN 61000-6-2, EN 61000-6-4
Electrical connection		Code 0/7 Code 5	6 + PE acc. EN 175201-804 11 + PE acc. EN 175201-804
Wiring min.	Code 0/7	[mm²]	7x1.0 (AWG 16) overall braid shield
	Code 5	[mm²]	8x1.0 (AWG 16) overall braid shield
Wiring length max.		[m]	50

[1] If valves with onboard electronics are used in safety-related parts of control systems, in case the safety function is requested, the valve electronics voltage supply is to be switched off by a suitable switching element with sufficient reliability.

[2] For applications with p_T>35 bar (max. 350 bar) the Y-port has to be connected and the plug in the Y-port has to be removed.

[3] Flow rate for different Δp per control edge: $Q_x = Q_{Nom.} \cdot \sqrt{\frac{\Delta p_x}{\Delta p_{Nom.}}}$

[4] Measured with load (100 bar pressure drop/two control edges).

Flow curves
(Overlapped spool opening point 23 %)
at Δp = 35 bar per metering edge
Spool type **E01/E50**

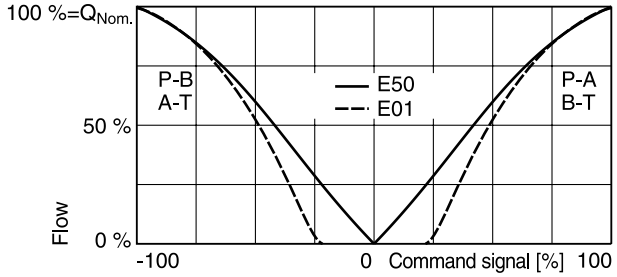

Spool type **B31/B60**

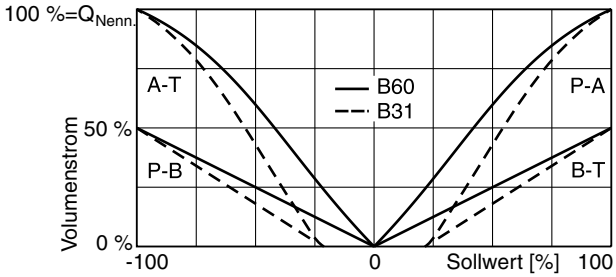

Pressure gain

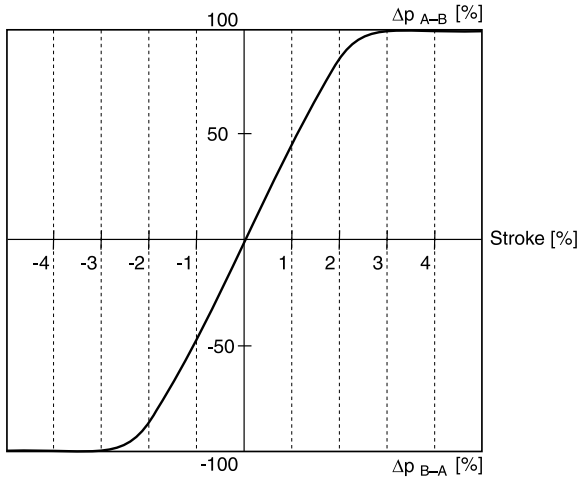

Functional limits
at 25 %, 50 %, 75 % and 100 % command signal
Spool type **E01M/E50M**

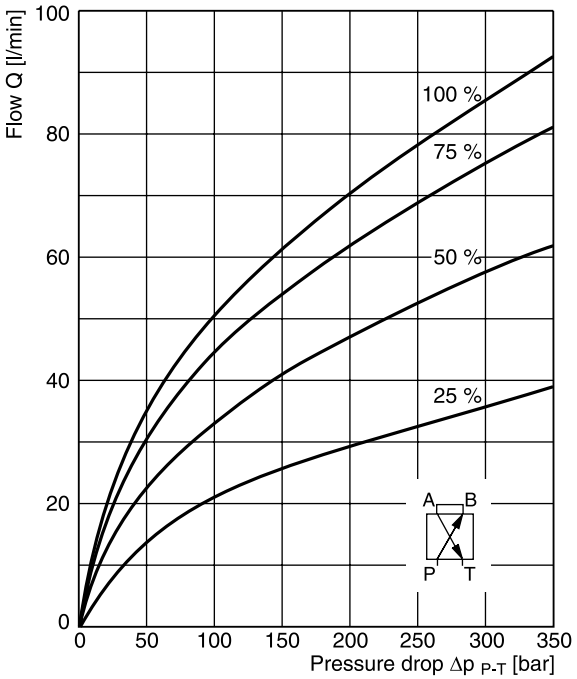

Frequency response
±5 % command signal
±90 % command signal

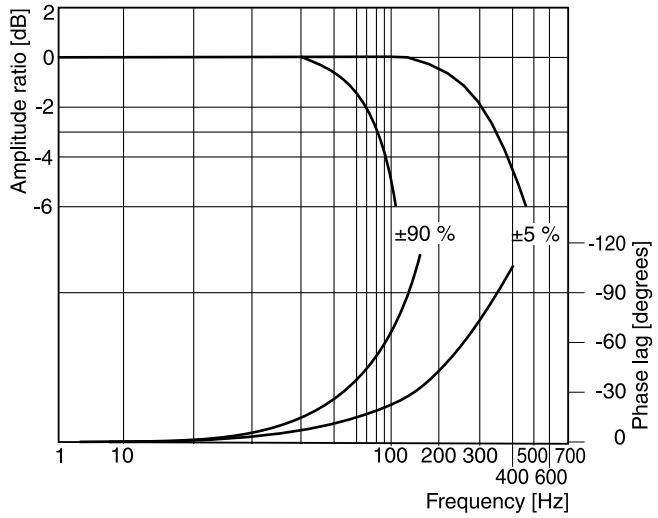

All characteristic curves measured with HLP46 at 50 °C.

3

Code 0

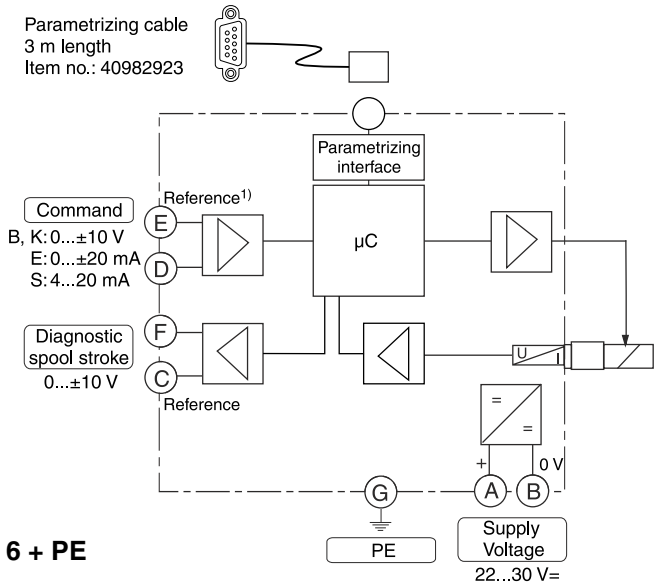

6 + PE

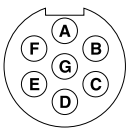

Code 5

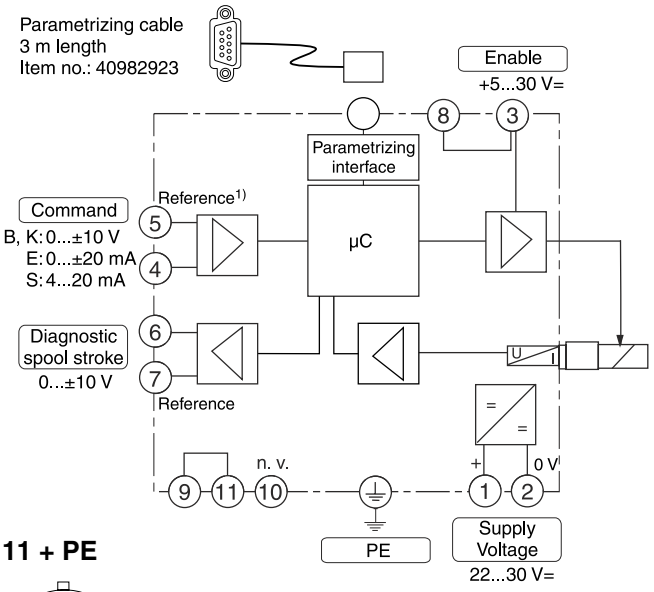

11 + PE



Code 7

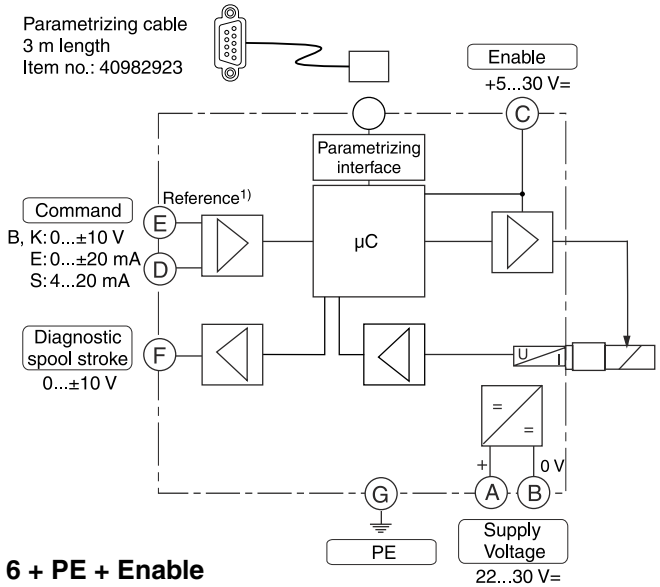

6 + PE + Enable

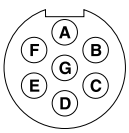

[1] Do not connect with supply voltage zero.

ProPxD interface program

The ProPxD software allows quick and easy setting of the digital valve electronics. Individual parameters as well as complete settings can be viewed, changed and saved via the comfortable user interface. Parameter sets saved in the non-volatile memory can be loaded to other valves of the same type or printed out for documentation purposes.

The PC software can be downloaded free of charge at www.parker.com/isde – see page “Support" or directly at www.parker.com/propxd.

Features

- Comfortable editing of valve parameters
- Saving and loading of customized parameter sets
- Executable with all Windows® operating systems from Windows® XP upwards
- Simple communication between PC and valve electronics via serial interface RS232C

The valve electronics cannot be connected to a PC with a standard USB cable – this can result in damages of PC and/or valve electronics.

The parametrizing cable may be ordered under item no. 40982923.

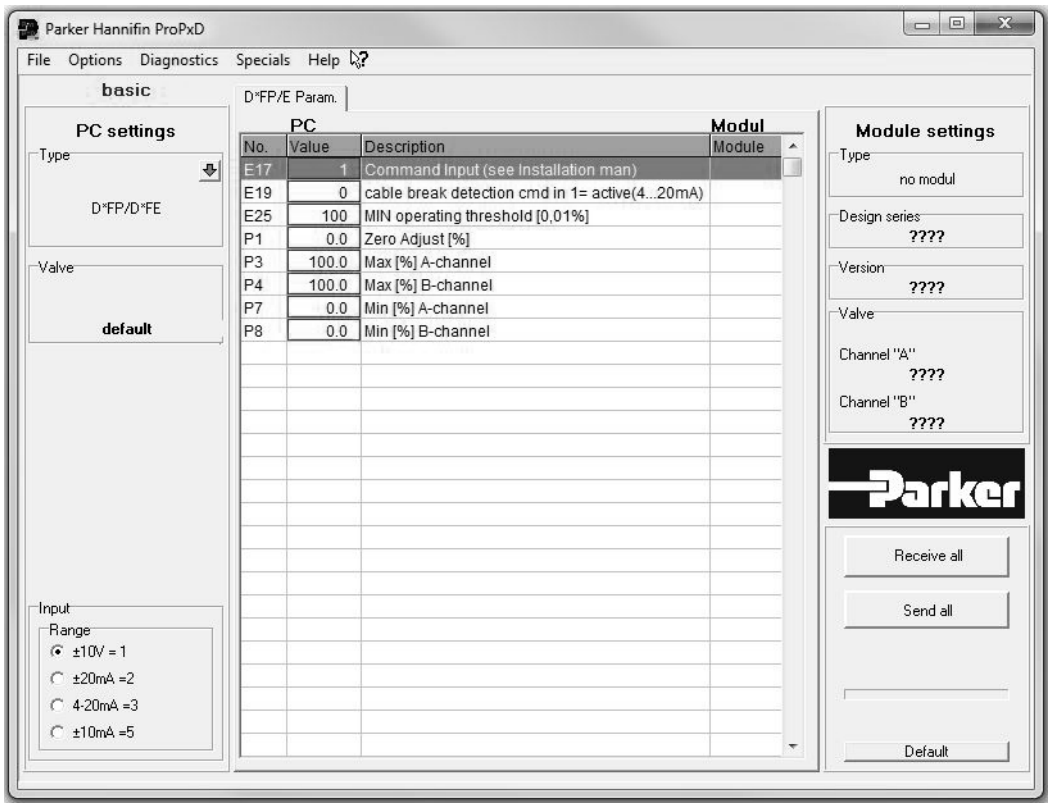

3

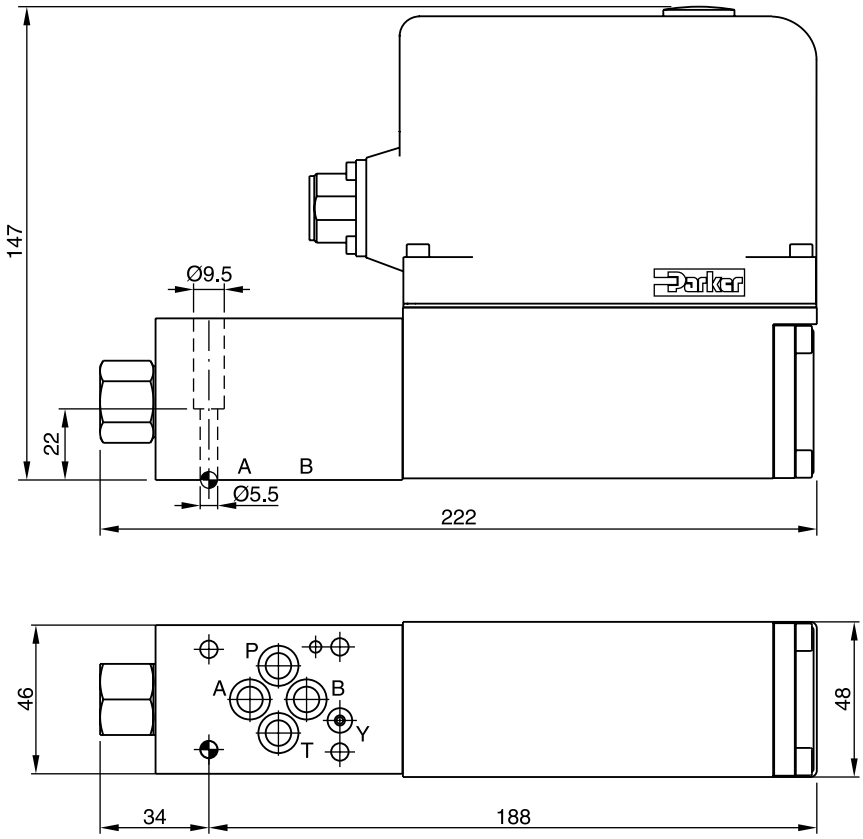

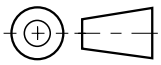

Surface finish	Kit			Kit
$\sqrt{R_{max}6.3}$ 0.01/100	BK375	4x M5x30 ISO 4762-12.9	7.6 Nm ±15 %	NBR: SK-D1FP FPM: SK-D1FP-V HFC: SK-D1FP-H

The direct operated control valve D3FP of the nominal size NG10 (CETOP 05) shows extremly high dynamics combined with high flow. It is the preferred choice for highest accuracy in positioning of hydraulic axis and controlling of pressure and velocity.

Driven by the patented VCD® actuator the D3FP reaches the frequency response of real servovalves.

At power-down the spool moves in a defined position. All common input signals are available.



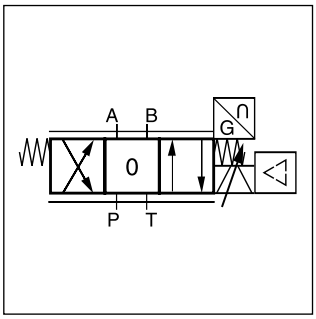

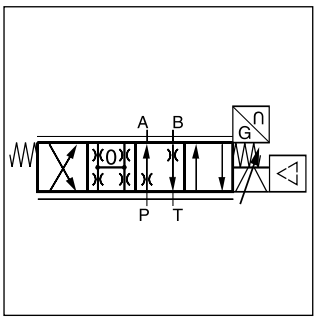

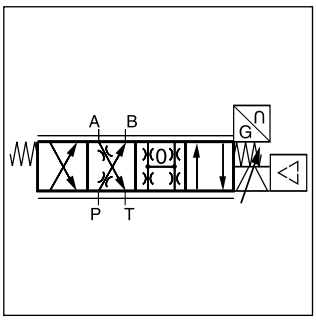

Features

- Real servovalve dynamics
  (-3 dB / 350 Hz at ±5 % input signal)
- Max. tank pressure 250 bar
  (with external drain port Y)
- Defined spool positioning at power-down - optional
  P-A/B-T or P-B/A-T or center position
  (for overlapped spools)
- Onboard electronics
- Spool / sleeve design

CE

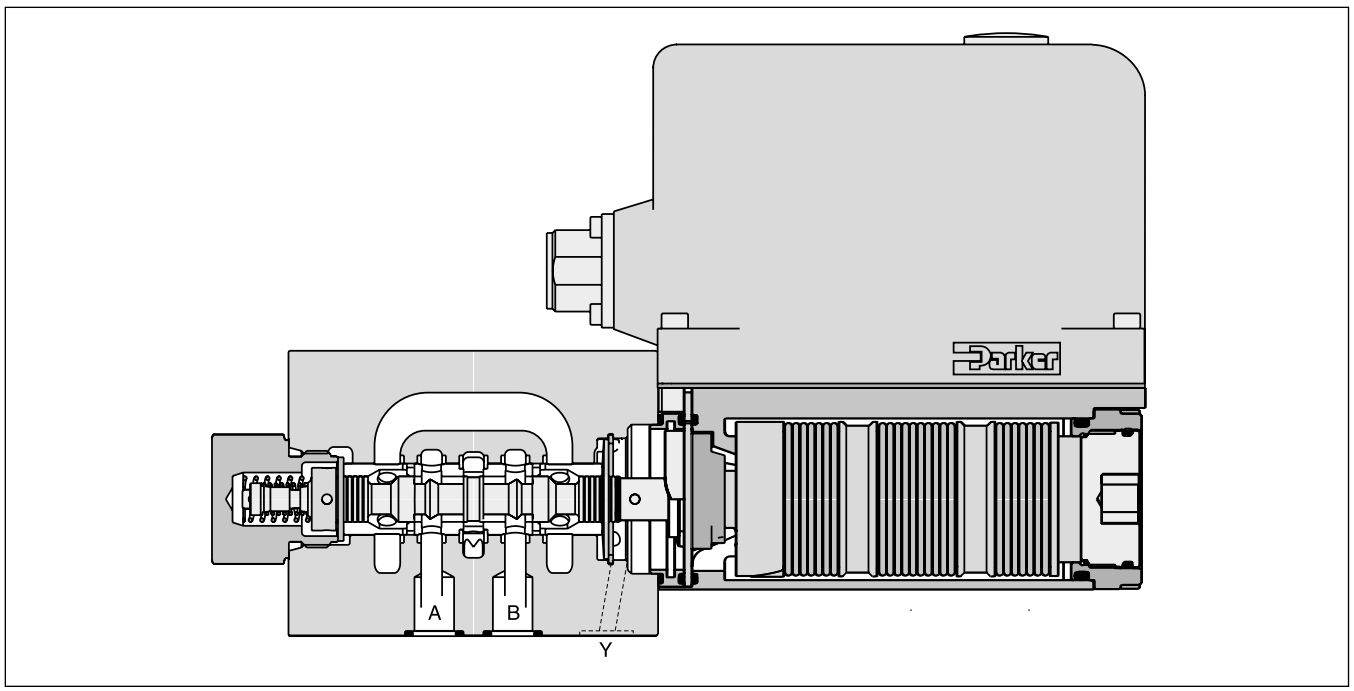

D	3	F	P			9				0	
Direct. control valve	**Size DIN NG10 CETOP 05 NFPA D05**	**Proportional control**	**VCD**	**Spool type**	**Spool position on power down [1]**	**Y-port (plugged) [4]**	**Seals**	**Command signal**	**Electronics option**	**Spool/ sleeve design**	**Design series** (not required for ordering)

Code	Spool type	Flow [l/min] at Δp 35 bar per metering edge
	Zerolap	
E50P		**50**
E50Y		**100**
B60P	$Q_B = Q_A/2$ 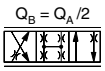	**50**
B60Y	$Q_B = Q_A/2$ 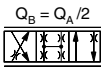	**100**
	Underlap approx. -0.5 %	
E55P		**50**
E55Y		**100**
	Overlap	
E01P E01Y	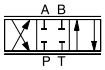	**50 100**
E02P E02Y		**50 100**
B31P B31Y	$Q_B = Q_A/2$ 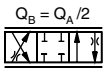	**50 / 25 100 / 50**
B32P B32Y	$Q_B = Q_A/2$ 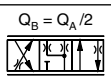	**50 / 25 100 / 50**

Code	Connection type
0	**6 + PE acc. EN175201-804**
5	**11 + PE acc. EN175201-804**
7	**6 + PE + Enable**

Code	Signal	Function
B	**+/- 10 V**	**0...+10 V -> P-A**
E	**+/- 20 mA**	**0...+20 mA -> P-A**
S	**4...20 mA**	**12...20 mA -> P-A**

Code	Seals
N	**NBR**
V	**FPM**
H	**for HFC fluid**

Code	Spool pos. at power down
A [2]	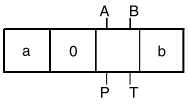
B [2]	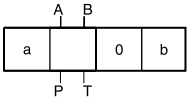
C [3]	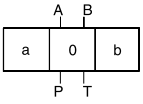

Short delivery time for all variations

For regenerative and hybrid function please refer solutions with sandwich- and adaptor plates "A10-1664 / A10-1665L / H10-1662 / H10-1666L" in chapter 12.

Please order connector separately, see chapter 3 accessories.

Parametrizing cable OBE -> RS232, item no. 40982923

[1] On power down the spool moves in a defined position. This cannot be guaranteed in case of single flow path on the control edge A – T resp. B – T with pressure drops above 120 bar or contamination in the hydraulic fluid.

[2] Approx. 10 % opening, only zerolapped spools and underlapped spools.

[3] Only for overlapped spools.

[4] Plug in the Y-port needs to be removed at tank pressure >35 bar.

General			
Design			Direct operated servo proportional DC valve
Actuation			VCD® actuator
Size			NG10 / CETOP 05 / NFPA D05
Mounting interface			DIN 24340 / ISO 4401 / CETOP RP121 / NFPA
Mounting position			unrestricted
Ambient temperature		[°C]	-20...+50
$MTTF_D$ value [1]		[years]	150
Weight		[kg]	6.5
Vibration resistance		[g]	10 Sinus 5...2000 Hz acc. IEC 68-2-6 10 (RMS) Random noise 20...2000 Hz acc. IEC 68-2-36 15 Shock acc. IEC 68-2-27
Hydraulic			
Max. operating pressure		[bar]	Ports P, A, B 350, port T 35 for internal drain, 250 for external drain, port Y 35 [2]
Fluid			Hydraulic oil according to DIN 51524 ... 535, other on request
Fluid temperature		[°C]	-20...+60 (NBR: -25...+60)
Viscosity	permitted	[cSt]/[mm²/s]	20...400
	recommended	[cSt]/[mm²/s]	30...80
Filtration			ISO 4406; 18/16/13
Flow nominal at Δp=35 bar per control edge [3]		[l/min]	50 / 100
Flow maximum		[l/min]	150
Leakage at 100 bar		[ml/min]	<400 (zerolap spool); <100 (overlap spool)
Opening point		[%]	set to 19 command signal (see flow characteristics)
Static / Dynamic			
Step response at 100 % step [4]		[ms]	<6
Frequency response (±5 % signal) [4]		[Hz]	200 (amplitude ratio -3 dB), 200 (phase lag -90°)
Hysteresis		[%]	<0.05
Sensitivity		[%]	<0.03
Temperature drift		[%/K]	<0.025
Electrical characteristics			
Duty ratio		[%]	100
Protection class			IP65 in accordance with EN 60529 (with correctly mounted plug-in connector)
Supply voltage/ripple		[V]	22 ... 30, electric shut-off at < 19, ripple <5 % eff., surge free
Current consumption max.		[A]	3.5
Pre-fusing		[A]	4.0 medium lag
Input signal			
Code B	Voltage	[V]	10...0...-10, ripple <0.01 % eff., surge free, 0...+10 V P->A
	Impedance	[kOhm]	100
Code E	Current	[mA]	20...0...-20, ripple <0.01 % eff., surge free, 0...+20 mA P->A
	Impedance	[Ohm]	<250
Code S	Current	[mA]	4...12...20, ripple <0.01 % eff., surge free, 12...20 mA P->A <3.6 mA = disable, >3.8 mA = according to NAMUR NE43
	Impedance	[Ohm]	<250
Differential input max.			
	Code 0	[V]	30 for terminal D and E against PE (terminal G)
	Code 5	[V]	30 for terminal 4 and 5 against PE (terminal ⏚)
	Code 7	[V]	30 for terminal D and E against PE (terminal G)
Enable signal	(only code 5/7)	[V]	5...30, Ri = > 8 kOhm
Diagnostic signal		[V]	+10...0...-10 / +12.5 error detection, rated max. 5 mA
EMC			EN 61000-6-2, EN 61000-6-4
Electrical connection		Code 0/7	6 + PE acc. EN 175201-804
		Code 5	11 + PE acc. EN 175201-804
Wiring min.	Code 0/7	[mm²]	7 x 1.0 (AWG 16) overall braid shield
	Code 5	[mm²]	8 x 1.0 (AWG 16) overall braid shield
Wiring length max.		[m]	50

[1] If valves with onboard electronics are used in safety-related parts of control systems, in case the safety function is requested, the valve electronics voltage supply is to be switched off by a suitable switching element with sufficient reliability.

[2] For applications with p_T>35 bar (max. 250 bar) the Y-port has to be connected and the plug in the Y-port has to be removed.

[3] Flow rate for different Δp per control edge: $Q_x = Q_{Nom.} \cdot \sqrt{\frac{\Delta p_x}{\Delta p_{Nom.}}}$

[4] Measured with load (100 bar pressure drop/two control edges).

3

Functional limits [1)]
at 25 %, 50 %, 75 % and 100 % command signal
Spool type **E01Y/E02Y**

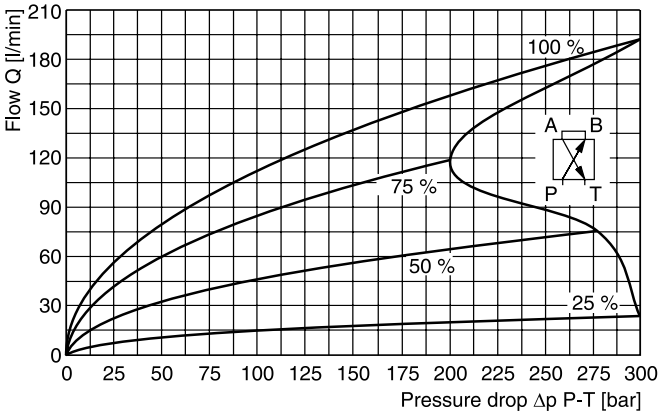

Functional limits [1)]
at 25 %, 50 %, 75 % and 100 % command signal
Spool type **E50Y/E55Y**

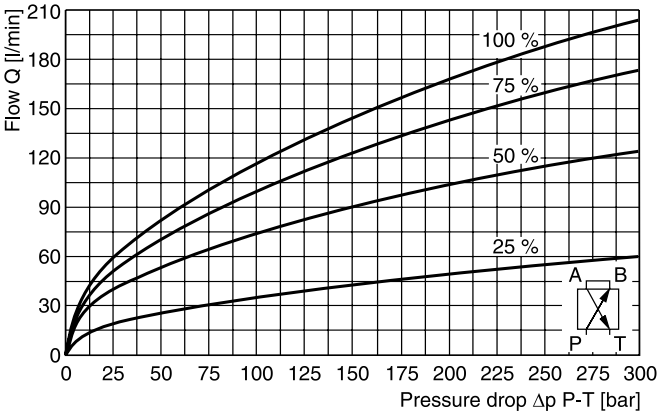

Flow curves
(Overlapped spool set to opening point 19 %)
at Δp = 35 bar per metering edge
Spool type **E50/E55, E01/E02**

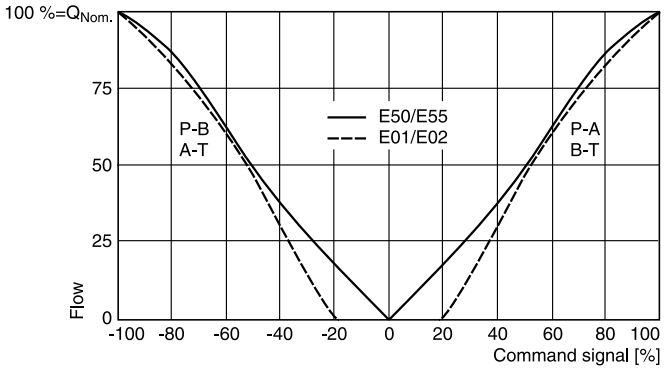

Spool type **B31/B32, B60**

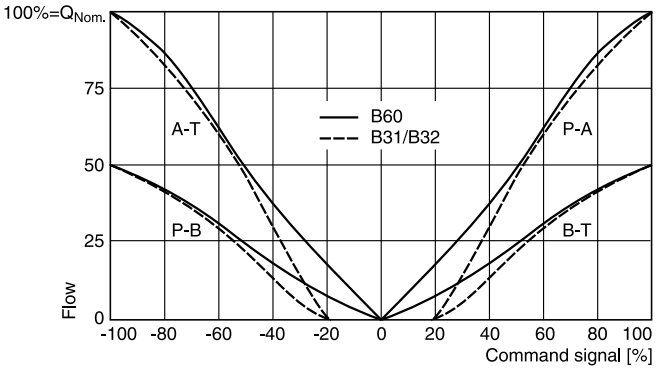

Pressure gain

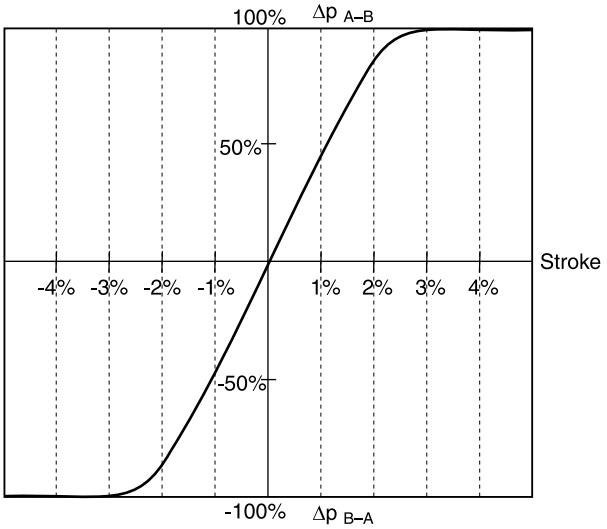

Frequency response
±5 % command signal
±90 % command signal

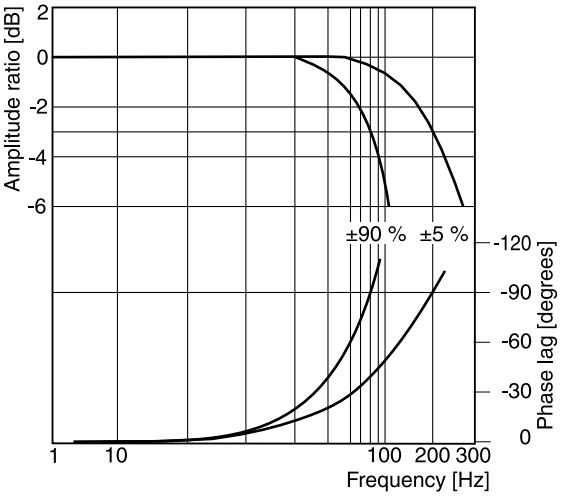

[1)] When exceeding the functional limits, for a period of time the valve will go into fail safe and power supply needs to be switched off/on to re-enable the valve.

Code 0

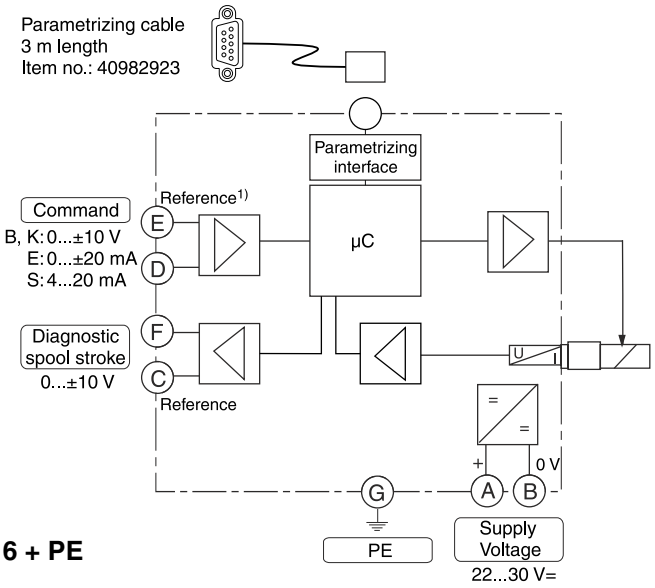

6 + PE

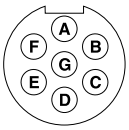

Code 5

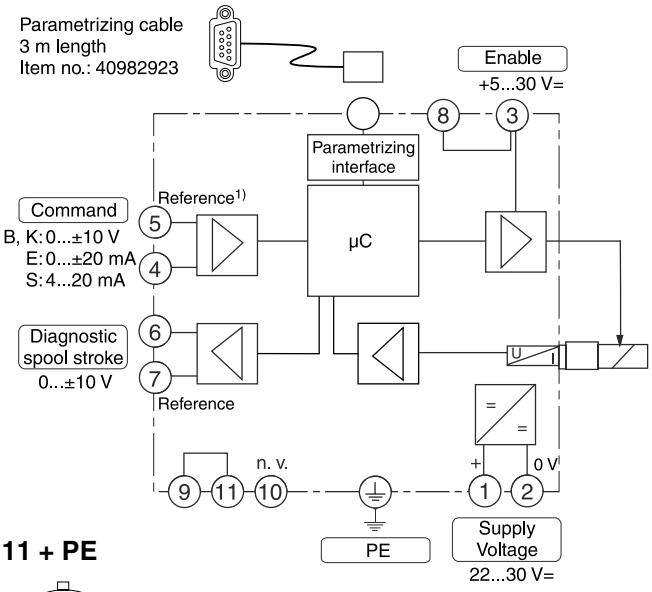

11 + PE



Code 7

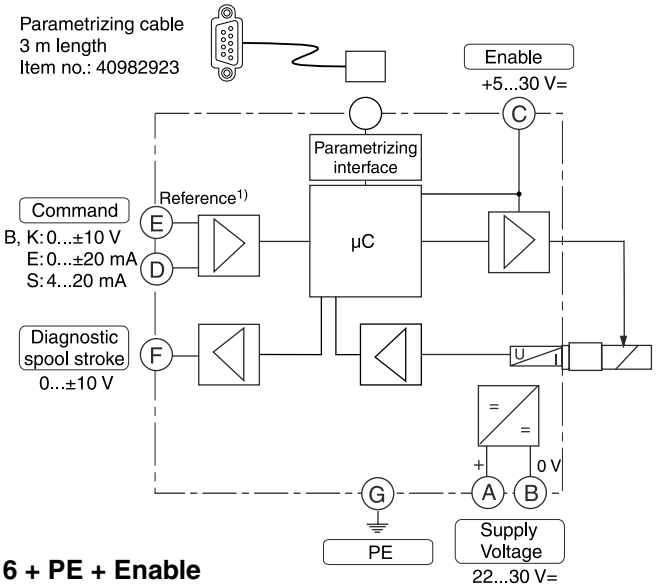

6 + PE + Enable

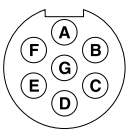

[1)] Do not connect with supply voltage zero.

3

ProPxD interface program

The ProPxD software allows quick and easy setting of the digital valve electronics. Individual parameters as well as complete settings can be viewed, changed and saved via the comfortable user interface. Parameter sets saved in the non-volatile memory can be loaded to other valves of the same type or printed out for documentation purposes.

The PC software can be downloaded free of charge at www.parker.com/isde – see page “Support" or directly at www.parker.com/propxd.

Features

- Comfortable editing of valve parameters
- Saving and loading of customized parameter sets
- Executable with all Windows® operating systems from Windows® XP upwards
- Simple communication between PC and valve electronics via serial interface RS232C

The valve electronics cannot be connected to a PC with a standard USB cable – this can result in damages of PC and/or valve electronics.

The parametrizing cable may be ordered under item no. 40982923.

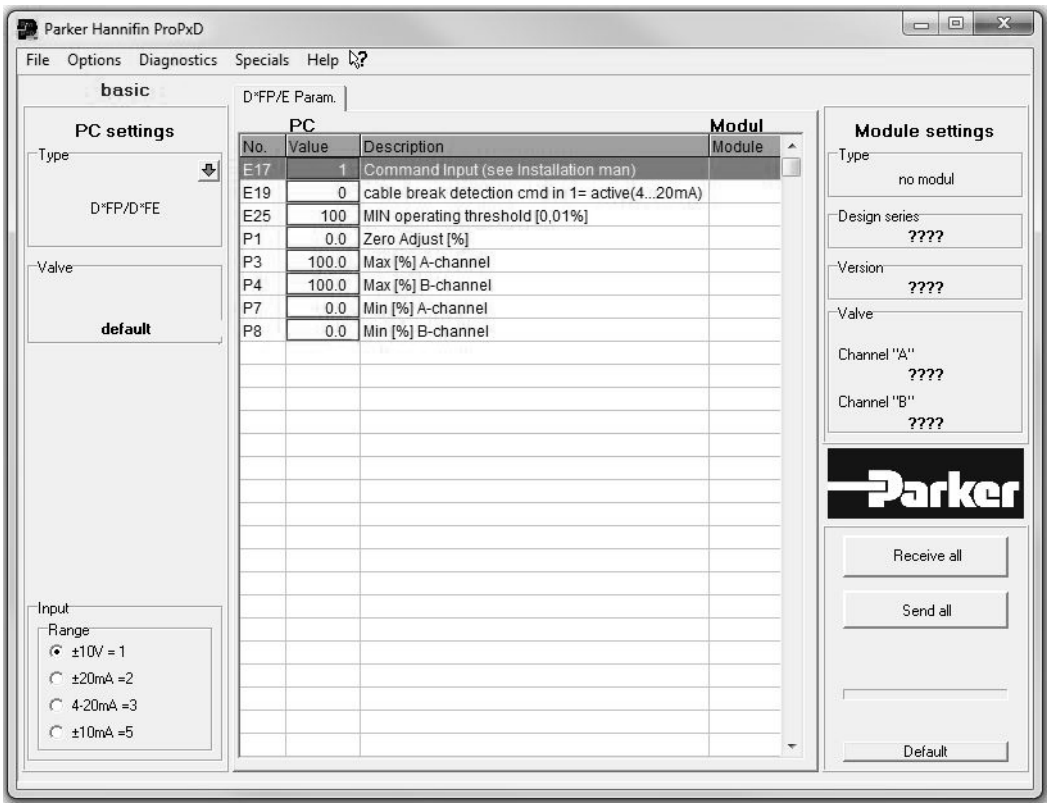

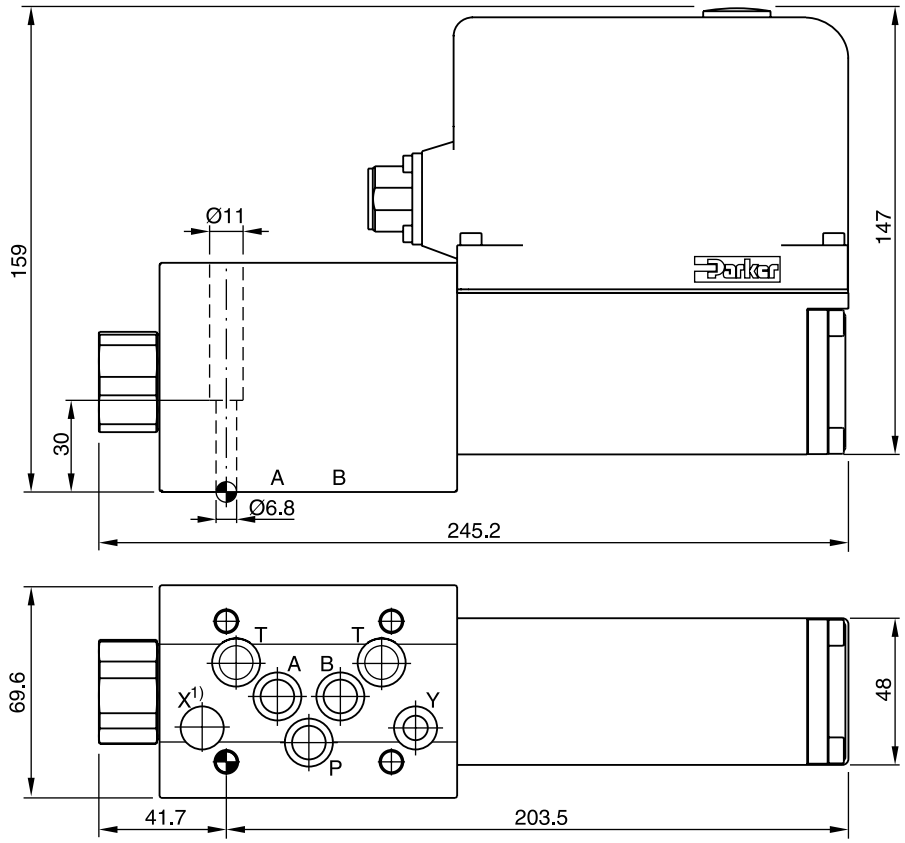

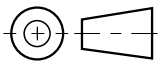

Surface finish	Kit			Kit
$\sqrt{R_{max}6.3}$ 0.01/100	BK385	4xM6x40 ISO 4762-12.9	13.2 Nm ±15 %	NBR: SK-D3FP FPM: SK-D3FP-V HFC: SK-D3FP-H

1) O-ring recess diameter on valve body.

The series of pilot operated control valves D30FP closes the gap between the direct operated D3FP valves and the conventional pilot operated D31FP valves.

Providing high flow capacity and practically no flow limits like D31FP in the envelope size of the D3FP.

The valve works with the hydraulic follower principle, with a moving sleeve as main spool.



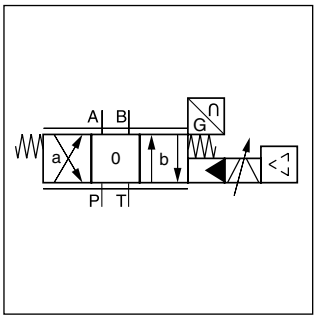

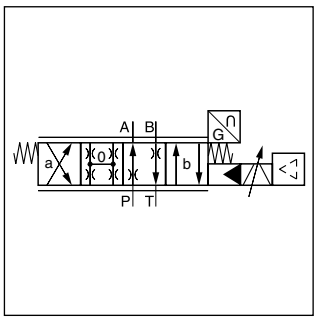

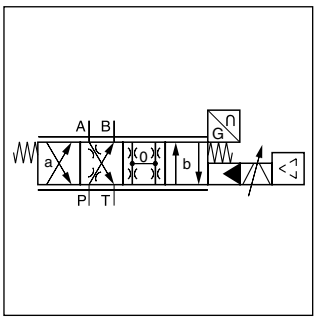

Features

- Pilot operated with hydraulic follower sleeve
- No flow limit up to 350 bar through the valve
- Defined spool positioning at power-down - optional P-A / B-T or P-B / A-T or center position (for overlapped spools)

CE

D30FP*3
with hydraulic follower principle

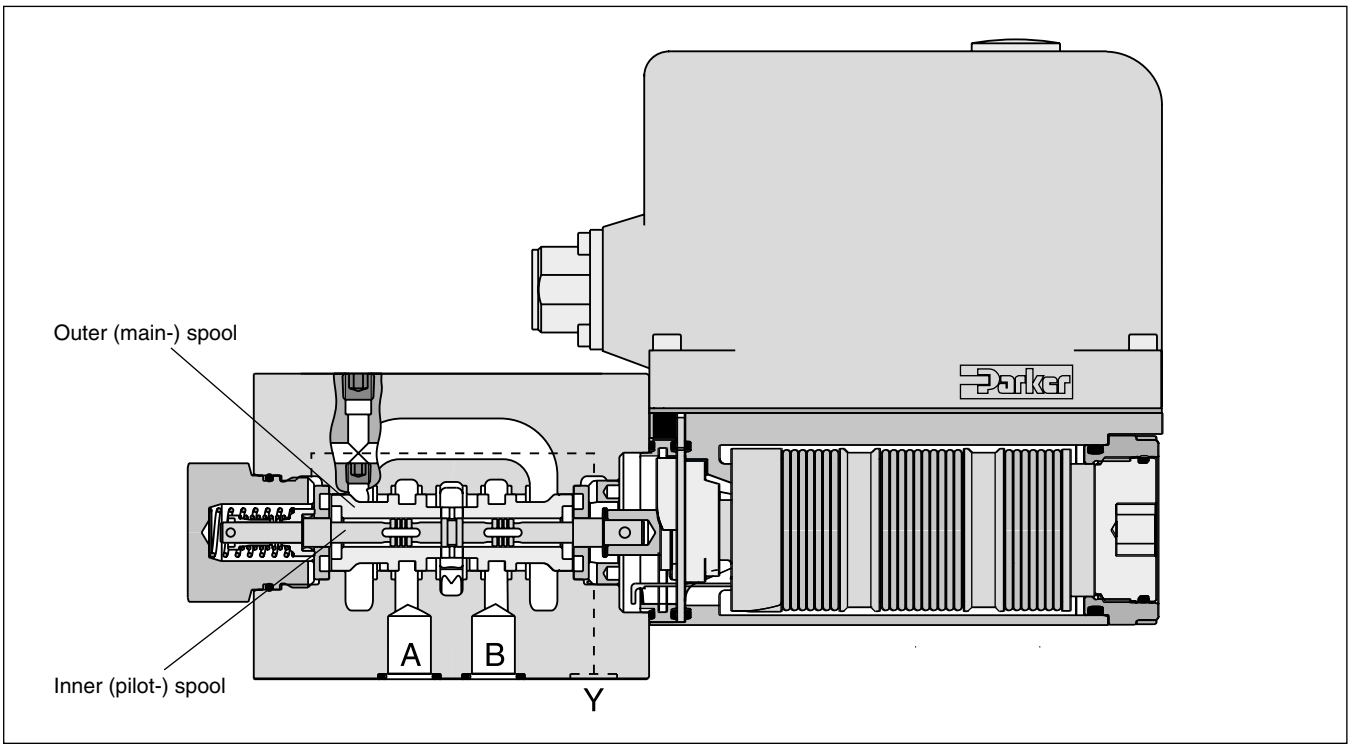

D	30	F	P							3	
Direct. control valve	**Size DIN NG10 CETOP 05 NFPA D05**	**Proportional control**	**VCD**	**Spool type**	**Spool position on power down**	**Pilot connection**	**Seals**	**Command signal**	**Electronics option**	**Spool/ body design**	**Design series** (not required for ordering)

Code	Spool type	Flow [l/min] at Δp 5 bar per metering edge
Zerolap		
E50U		**80**
B60U	$Q_B = Q_A/2$ 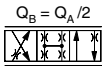	**80 / 40**
Overlap		
E01U	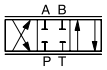	**80**
E02U	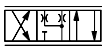	**80**
B31U	$Q_B = Q_A/2$ 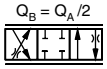	**80 / 40**
B32U	$Q_B = Q_A/2$ 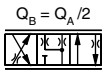	**80 / 40**

Code	Spool pos. at power down
A [1]	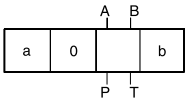
B [1]	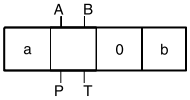
C [2]	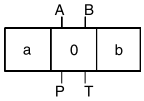

Code	Connection type
0	**6 + PE acc. EN175201-804**
5	**11 + PE acc. EN175201-804**
7	**6 + PE + Enable**

Code	Signal	Function
B	**+/- 10 V**	**0...+10 V -> P-A**
E	**+/- 20 mA**	**0...+20 mA -> P-A**
S	**4...20 mA**	**12...20 mA -> P-A**

Code	Seals
N	**NBR**
V	**FPM**
H	**for HFC fluid**

Code	Inlet	Drain
1 [3]	**internal**	**external**
4	**internal**	**internal**

Short delivery time for all variations

Please order connector separately, see chapter 3 accessories.
Parametrizing cable OBE -> RS232, item no. 40982923

[1] Approx. 10 % opening, only zerolapped spools.
[2] Only for overlapped spools.
[3] For tank pressure >35 bar.

3

General			
Design			Pilot operated servo proportional DC valve
Actuation			VCD® actuator
Size			NG10 / CETOP 05 / NFPA D05
Mounting interface			DIN 24340 / ISO 4401 / CETOP RP121 / NFPA
Mounting position			horizontal mounting preferred (other mounting positions after consultation)
Ambient temperature		[°C]	-20...+50
$MTTF_D$ value [1]		[years]	75
Weight		[kg]	6.5
Vibration resistance		[g]	10 Sinus 5...2000 Hz acc. IEC 68-2-6 10 (RMS) Random noise 20...2000 Hz acc. IEC 68-2-36 15 Shock acc. IEC 68-2-27
Hydraulic			
Max. operating pressure		[bar] [bar]	Ports P, A, B 350; Port T 35 for internal drain, 250 for external drain Port Y 35 [2]
Fluid			Hydraulic oil according to DIN 51524 ... 535, other on request
Fluid temperature		[°C]	-20...+60 (NBR: -25...+60)
Viscosity	permitted	[cSt]/[mm²/s]	20...400
	recommended	[cSt]/[mm²/s]	30...80
Filtration			ISO 4406; 18/16/13
Flow nominal at Δp=5 bar per control edge [3]		[l/min]	80
Flow maximum		[l/min]	250
Leakage at 100 bar		[ml/min]	<1800 (Zerolap spool); <1000 (Overlap spool)
Opening point		[%]	set to 9 commande signal (see flow characteristics)
Pilot supply pressure		[bar]	>5 higher than tank pressure (only internal pilot oil supply)
Static / Dynamic			
Step response at 100 % step [4]		[ms]	<7
Frequency response (±5 % signal) [4]		[Hz]	120 (amplitude ratio -3 dB), 120 (phase lag -90°)
Hysteresis		[%]	<0.05
Sensitivity		[%]	<0.03
Temperature drift		[%/K]	<0.025
Electrical characteristics			
Duty ratio		[%]	100
Protection class			IP65 in accordance with EN 60529 (with correctly mounted plug-in connector)
Supply voltage/ripple		[V]	DC 22 ... 30, electric shut-off at < 19, ripple < 5 % eff., surge free
Current consumption max.		[A]	3.5
Pre-fusing		[A]	4.0 medium lag
Input signal			
Code B	Voltage	[V]	10...0...-10, ripple <0.01 % eff., surge free, 0...+10 V P->A
	Impedance	[kOhm]	100
Code E	Current	[mA]	20...0...-20, ripple <0.01 % eff., surge free, 0...+20 mA P->A
	Impedance	[Ohm]	<250
Code S	Current	[mA]	4...12...20, ripple <0.01 % eff., surge free, 12...20 mA P->A <3.6 mA = disable, >3.8 mA = according to NAMUR NE43
	Impedance	[Ohm]	<250
Differential input max.			
	Code 0	[V]	30 for terminal D and E against PE (terminal G)
	Code 5	[V]	30 for terminal 4 and 5 against PE (terminal ⏚)
	Code 7	[V]	30 for terminal D and E against PE (terminal G)
Enable signal (only code 5/7)		[V]	5...30, Ri = > 8 kOhm
Diagnostic signal		[V]	+10...0...-10 / +12.5 error detection, rated max. 5 mA
EMC			EN 61000-6-2, EN 61000-6-4
Electrical connection		Code 0/7 Code 5	6 + PE acc. EN 175201-804 11 + PE acc. EN 175201-804
Wiring min.	Code 0/7	[mm²]	7 x 1.0 (AWG 18) overall braid shield
	Code 5	[mm²]	8 x 1.0 (AWG 18) overall braid shield
Wiring length max.		[m]	50

[1] If valves with onboard electronics are used in safety-related parts of control systems, in case the safety function is requested, the valve electronics voltage supply is to be switched off by a suitable switching element with sufficient reliability.

[2] For applications with p_T>35 bar (max. 250 bar) the Y-port has to be connected and the plug in the Y-port has to be removed.

[3] Flow rate for different Δp per control edge: $Q_x = Q_{Nom.} \cdot \sqrt{\frac{\Delta p_x}{\Delta p_{Nom.}}}$

[4] Measured with load (100 bar pressure drop/two control edges).

Flow curves
(Overlapped spool set to opening point 9 %)
at Δp = 5 bar per metering edge
Spool type **E01/02, E50**

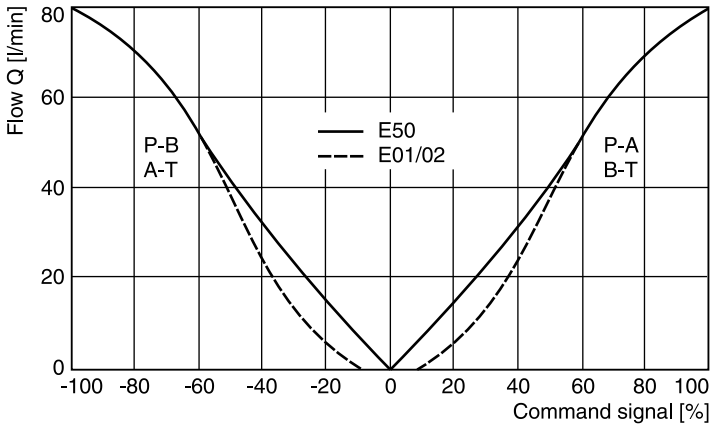

Pressure gain

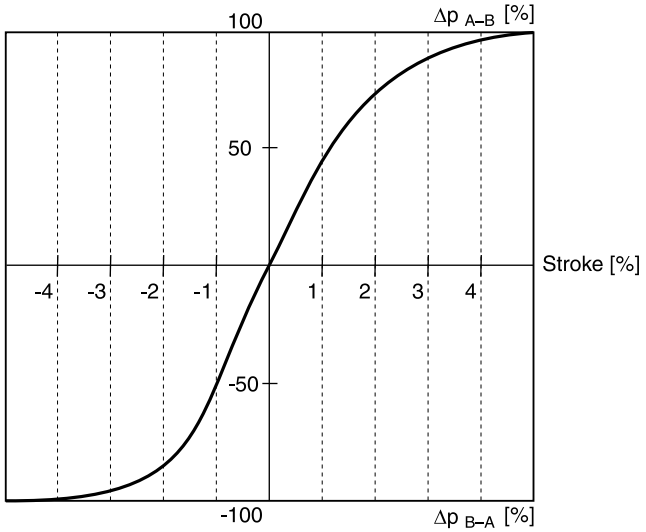

Frequency response
±5 % command signal
±25 % command signal

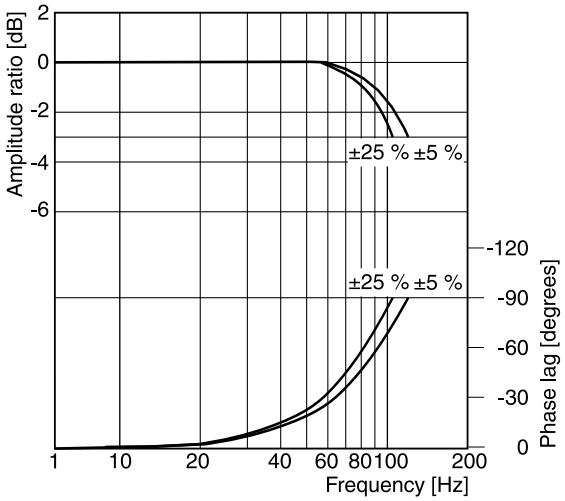

3

Code 0

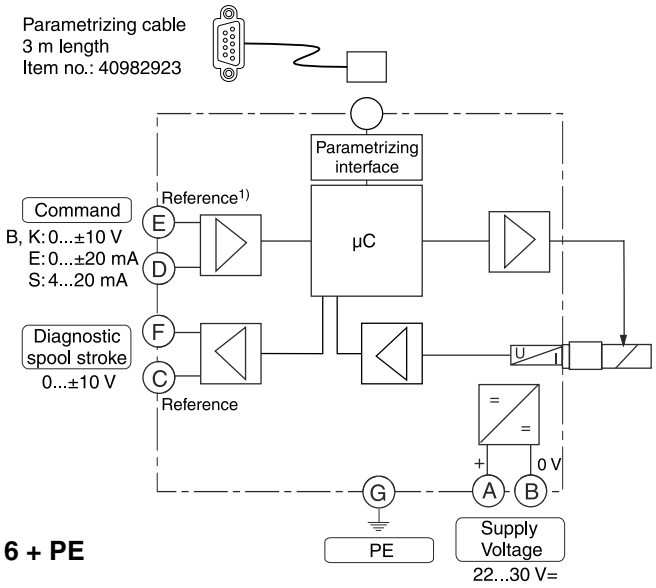

6 + PE

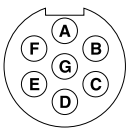

Code 5

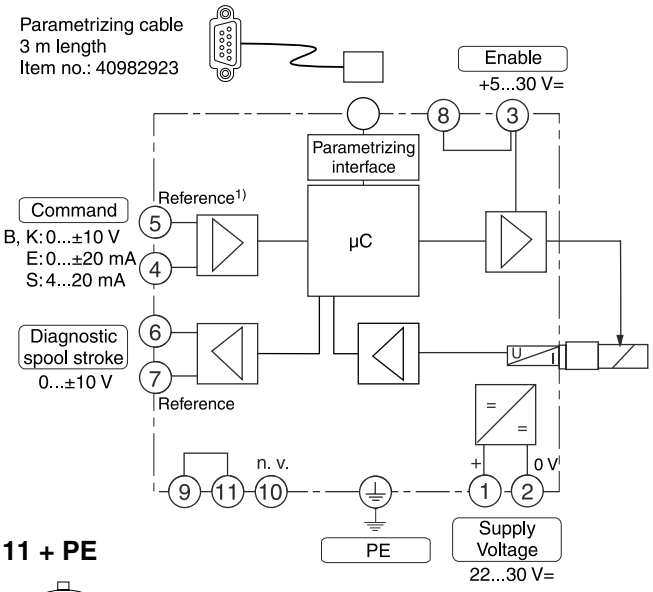

11 + PE



Code 7

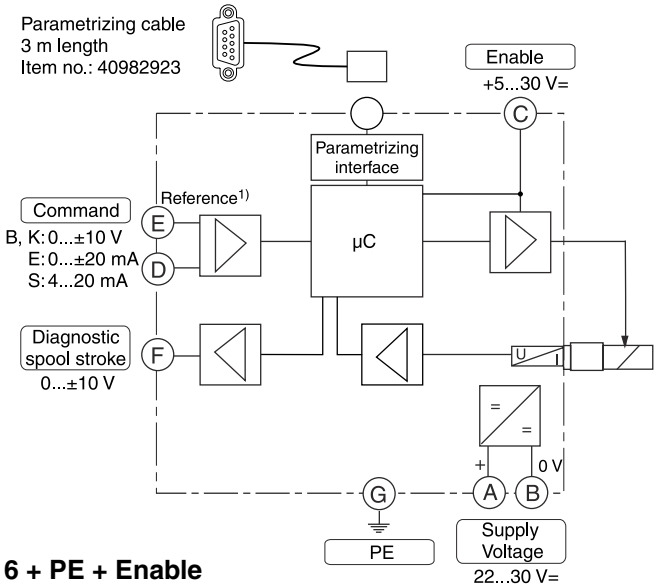

6 + PE + Enable

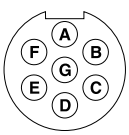

1) Do not connect with supply voltage zero.

ProPxD interface program

The ProPxD software allows quick and easy setting of the digital valve electronics. Individual parameters as well as complete settings can be viewed, changed and saved via the comfortable user interface. Parameter sets saved in the non-volatile memory can be loaded to other valves of the same type or printed out for documentation purposes.

The PC software can be downloaded free of charge at www.parker.com/isde – see page “Support" or directly at www.parker.com/propxd.

Features

- Comfortable editing of valve parameters
- Saving and loading of customized parameter sets
- Executable with all Windows® operating systems from Windows® XP upwards
- Simple communication between PC and valve electronics via serial interface RS232C

The valve electronics cannot be connected to a PC with a standard USB cable – this can result in damages of PC and/or valve electronics.

The parametrizing cable may be ordered under item no. 40982923.

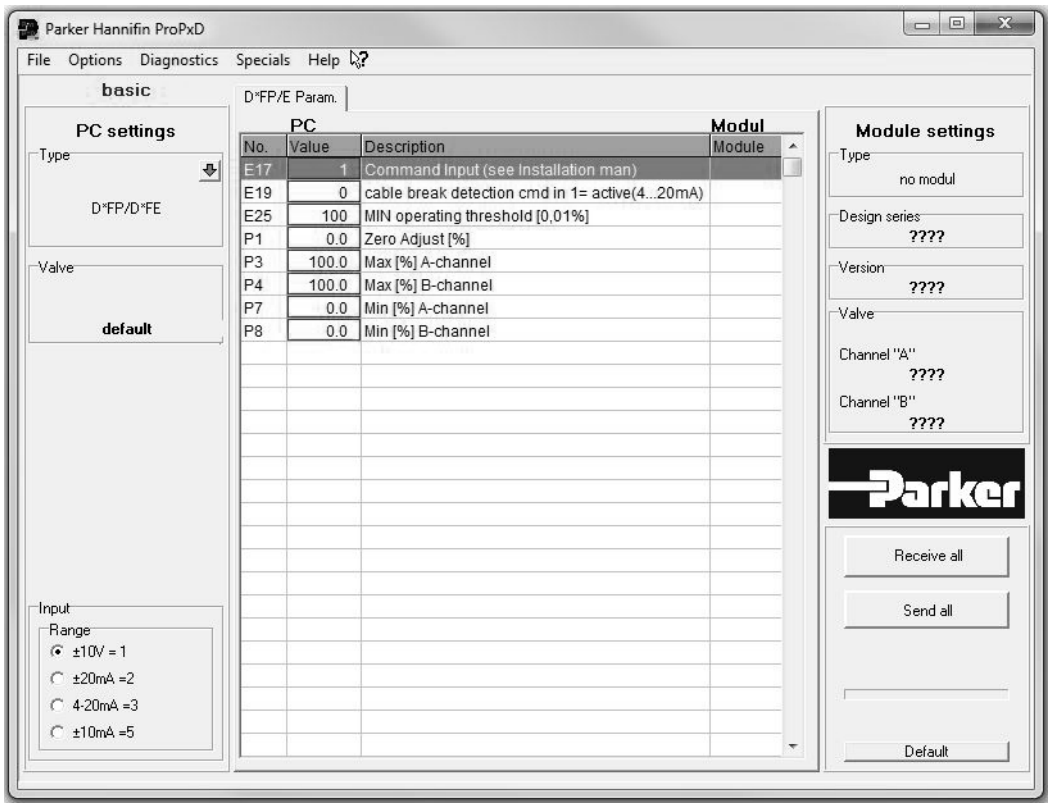

3

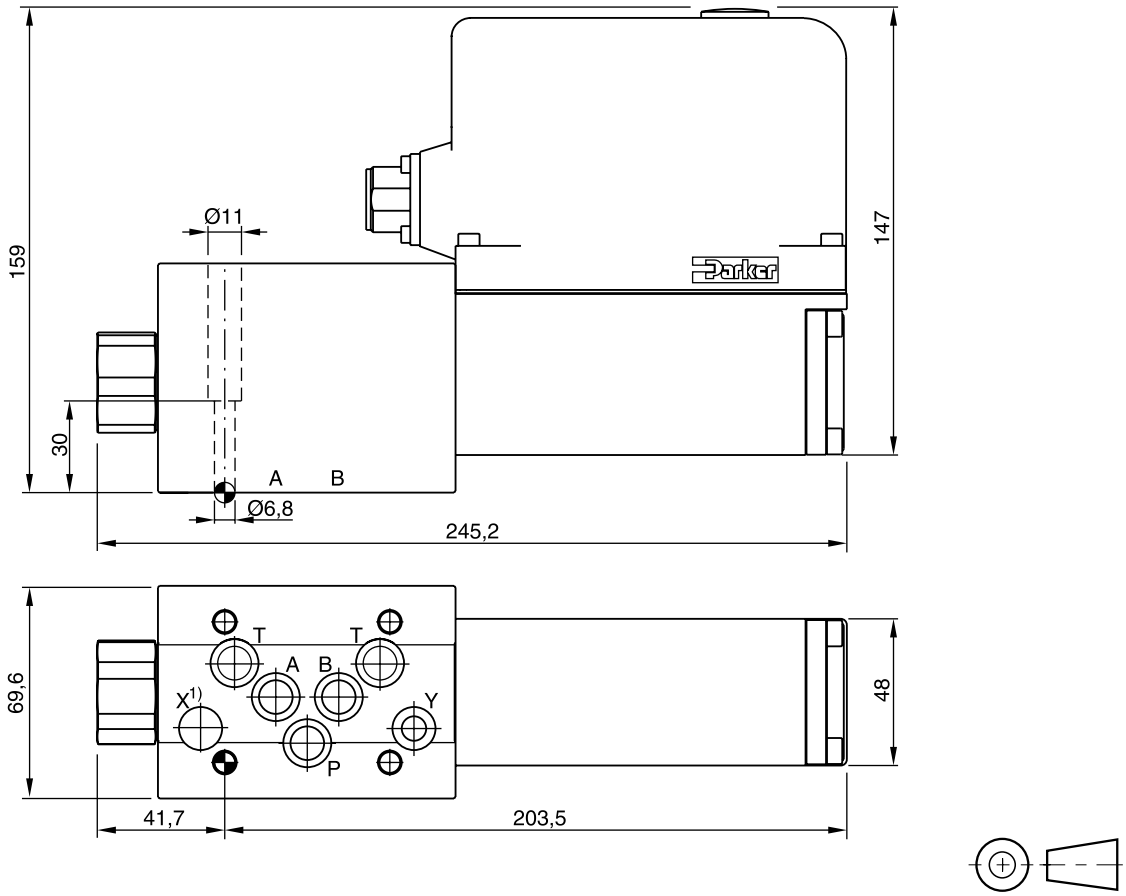

Surface finish	Kit			Kit
R_{max}6.3 ⏥ 0.01/100	BK385	4xM6x40 ISO 4762-12.9	13.2 Nm ±15 %	NBR: SK-D3FP FPM: SK-D3FP-V HFC: SK-D3FP-H

1) O-ring recess diameter on valve body.

The series of pilot operated servo proportional valves D*1FP transfers the advantages of the Parker patented Voice Coil Drive (VCD®) to larger frame sizes and thus high flow rates. The high dynamics / high precision drive of the pilot valve allows the optimum control of the main spool and results in servo class performance of the complete valves.

The D*1FP series is available in 5 sizes:

D31FP NG10 (CETOP 05)
D41FP NG16 (CETOP 07)
D81FP NG25 (CETOP 08) for port diam. up to 26 mm
D91FP NG25 (CETOP 08) for port diam. up to 32 mm
D111FP NG32 (CETOP 10)

The safety concept works with a safe 4th position at the D1FP pilot valve. This ensures that the main stage is hydraulically balanced at power down and allows to have the main spool spring centered (for overlapped spools) or approximately 10 % spring offset to spool position A or B (for zerolap spools).

The innovative integrated regenerative function into the A-line (optional) allows new energy saving circuits for differential cylinders. The hybrid version can be switched between regenerative mode and standard mode at any time.


D41FP Standard

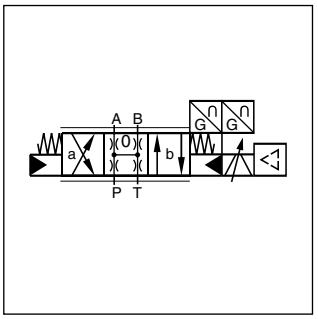

Standard D*1FPE

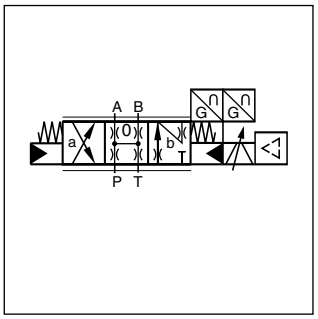

A-regeneration D*1FPR

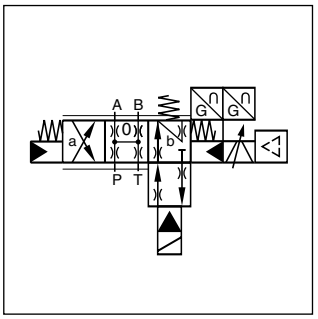

Hybrid D*1FPZ

Features

- High dynamics
- High flow
- Defined spool positioning at power-down - optional P-A/B-T or P-B/A-T or center position (for overlapped spools)
- Onboard electronics
- Energy saving A-regeneration
- Switchable hybrid version

D41FPE52 (Standard)

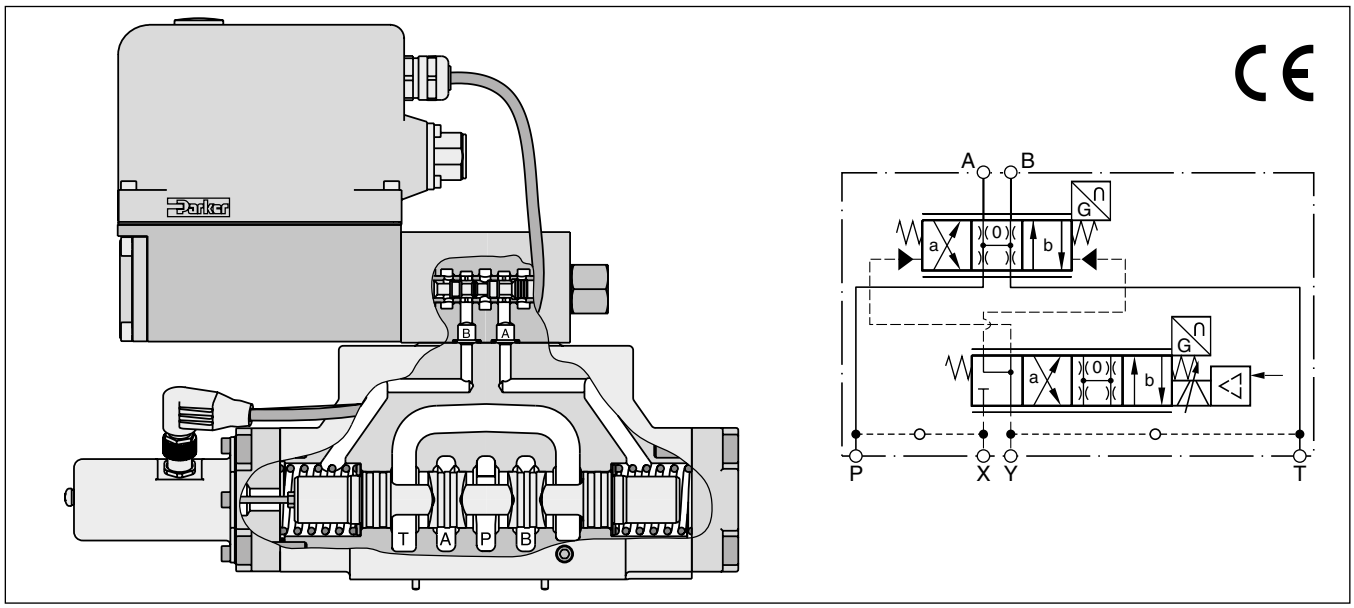

3

D*1FPR and D*1FPZ

Regenerative valve D*1FPR

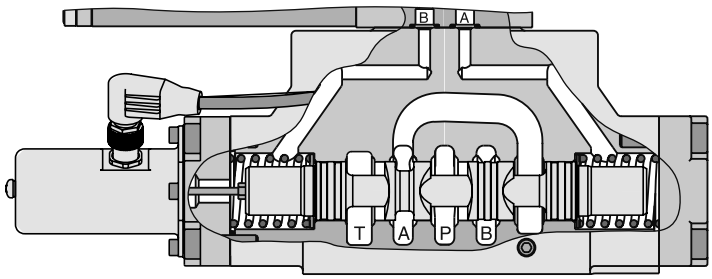

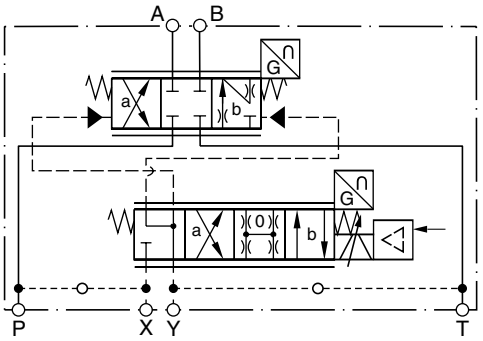

Hybrid valve D*1FPZ

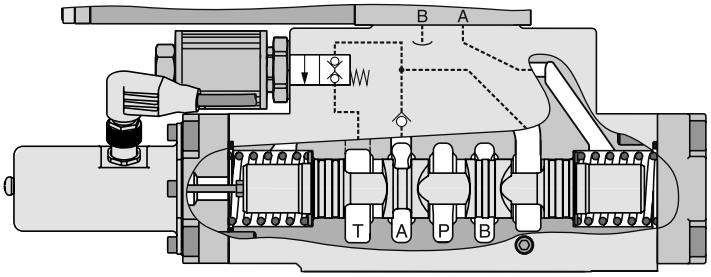

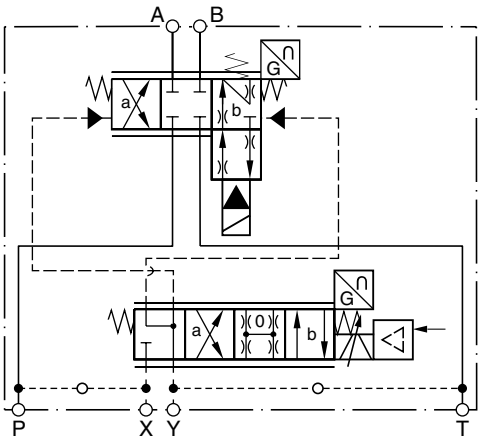

D*1FPR (regenerative valve)
Cylinder extending

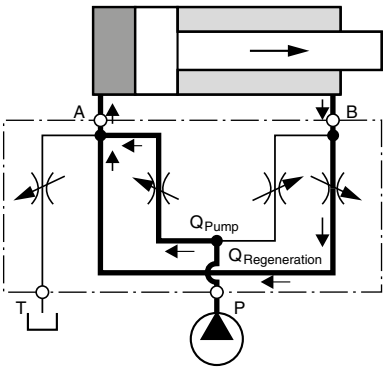

D*1FPZ (hybrid valve)
Cylinder extending
in regenerative mode (high speed)

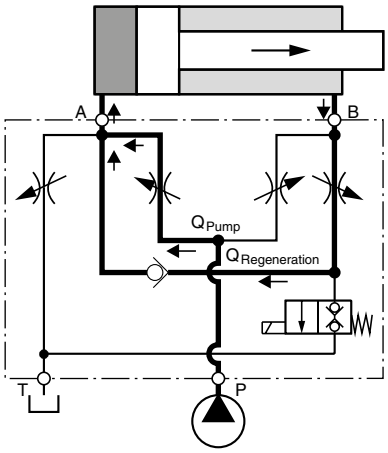

Cylinder extending
in standard mode (high force)

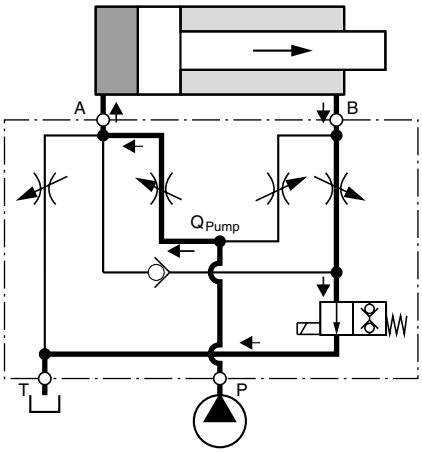

Flow rate in % of nominal flow

Size [1]	Spool	Port					
		A-T	P-A	P-B	B-A (R-Valve)	B-A (Hybrid)	B-T (Hybrid)
D41FPR/Z	31/32/61	100 %	50 %	100 %	50 %	40 %	20 %
D91FPR/Z	31/32/61	100 %	50 %	100 %	50 %	50 %	25 %
D111FPR/Z	31/32/61	100 %	50 %	100 %	50 %	50 %	20 %

[1] D31FP: For size NG10 please refer solution with sandwich- and adaptor plates "A10-1664 / A10-1665L / H10-1662 / H10-1666L" in chapter 12.

D		1	F	P									
Directional control valve	Size	NG06 pilot	Proportional control	VCD performance	Function	Flow	Spool position on power down	Pilot connections	Seals	Command signal	Electronics options	Valve option	Design series (not required for ordering)

Code	Size
3	NG10 / CETOP 05
4	NG16 / CETOP 07
8	NG25 / CETOP 08
9 [1]	NG25 / CETOP 08
11	NG32 / CETOP 10

Code	Valve option
0	Standard for spool code B, E, R
L [7]	Hybrid valve 24 V normally closed for spool code Z

Code	Connection type
0	6+PE acc. EN175201-804
5	11+PE acc. EN175201-804
7	6+PE + enable

Code	Signal	Function
B	0...±10 V	0...+10 V P -> B
E	0...±20 mA	0...+20 mA P -> B
K	0...±10 V	0...+10 V P -> A
S	4...20 mA	12...20 mA P -> A

Code	Seals
N	NBR
V	FPM
H	for HFC fluid

Code	Inlet	Drain
1	internal	external
2	external	external
4	internal	internal
5	external	internal

Standard		Regenerative function [4] [5]		Hybrid function [5] [6]	
Code	Spool type	Code	Spool type	Code	Spool type
overlap		overlap		overlap	
E01	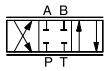	R31		Z31	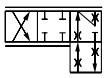
E02		R32	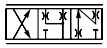	Z32	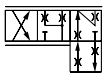
B31	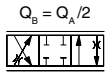				
B32	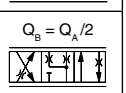				
zerolap		zerolap		zerolap	
E52		R61		Z61	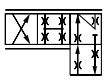
B61	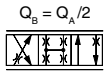				

Code	Flow [l/min] at Δp = 5 bar per metering edge				
	D31	D41	D81	D91	D111
D	**90**	—	—	—	—
E	**120**	—	—	—	—
F	—	**200**	—	—	—
H	—	—	**400**	**450**	—
L	—	—	—	—	**1000**

Code	Spool pos. on power down
A [2]	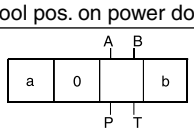
B [2]	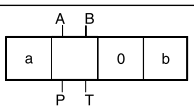
C [3]	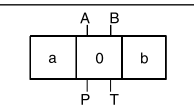

Please order connector separately. See chapter 3 accessories.
Parametrizing cable OBE -> RS232, item no. 40982923

[1] For enlarged connections Ø 32 mm.
[2] Approx. 10 % opening, only zero lapped spools.
[3] For overlapped spools.
[4] Not for D81FP.
[5] For regenerative and hybrid function at D31FP (NG10) please refer to solutions with sandwich and adaptor plates "A10-1664 / A10-1665L / H10-1662 / H10-1666L" in chapter 12.

D31FP spooltype: R31 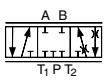 R32 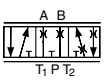 R61 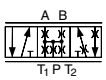

[6] Not for valve D31FP and D81FP.
[7] See page "Regenerative and hybrid function" (not for D31FP).

Short delivery time for all variations

3

General						
Design			Pilot operated servo proportional DC valve			
Actuation			VCD®-actuator			
Size			**NG10 (CETOP 05)**	**NG16 (CETOP 07)**	**NG25 (CETOP 08)**	**NG32 (CETOP 10)**
			D31	**D41**	**D81 / D91**	**D111**
Mounting Interface			DIN 24340 / ISO 4401 / CETOP RP121 / NFPA			
Mounting position			unrestricted			
Ambient temperature		[°C]	-20...+50			
$MTTF_D$ value [1]		[years]	75			
Weight		[kg]	11.3	14.2	23.5	64.5
Vibration resistance		[g]	10 Sinus 5...2000 Hz acc. IEC 68-2-6 10 (RMS) Random noise 20...2000 Hz acc. IEC 68-2-36 15 Shock acc. IEC 68-2-27			
Hydraulic						
Max. operating pressure		[bar]	Internal pilot drain P, A, B, X 350; T, Y 35 External pilot drain P, A, B, T, X 350; Y 35			
Fluid			Hydraulic oil according to DIN 51524 ... 535, other on request			
Fluid temperature		[°C]	-20...+60 (NBR: -25...+60)			
Viscosity	permitted	[cSt]/[mm²/s]	20...400			
	recommended	[cSt]/[mm²/s]	30...80			
Filtration			ISO 4406; 18/16/13			
Nominal flow at Δp = 5 bar per control edge [2]		[l/min]	120	200	400 / 450	1000
Max. recommended flow (standard)		[l/min]	250	600	1000	3000
Regenerative B-A / B-T			depending on application, see flow curves			
Leakage at 100 bar	Overlapped spool	[ml/min]	200	200	600	1000
	Zerolapped spool	[ml/min]	900	900	1000	5000
	Pilot	[ml/min]	< 500			
Opening point		[%]	set to 10 command signal (see flow characteristics)			
Pilot supply pressure		[bar]	20...350			
Pilot flow during step response at 210 bar		[l/min]	10	12	24	40
Static / Dynamic						
Step response at 100 % stroke [3]		[ms]	10	13	19	45
Frequency response						
Amplitude ±5 % at 210 bar		[Hz]	128	95	95	40
Phase ±5 % at 210 bar		[Hz]	118	95	90	75
Hysteresis		[%]	< 0.1			
Sensitivity		[%]	< 0.05			
Temperature drift of center position		[%/K]	< 0.025			
Electrical						
Duty ratio		[%]	100			
Protection class			IP65 in accordance with EN 60529 (with correctly mounted plug-in connector)			
Supply voltage / ripple		[V]	22...30, ripple < 5 % eff., surge free			
Current consumption max.		[A]	3.5			
Pre-fusing		[A]	4.0 A medium lag			
Input signal	Code K (B) Voltage	[V]	+10...0...-10, ripple < 0.01 % eff., surge free, 0...+10 V P–>A (P–>B)			
	Impedance	[kOhm]	100			
	Code E Current	[mA]	+20...0...-20, ripple < 0.01 % eff., surge free, 0...+20 mA P–>B			
	Impedance	[Ohm]	<250			
	Code S Current	[mA]	4...12...20, ripple < 0.01 % eff., surge free, 12...20 mA P–>A			
	Impedance	[Ohm]	<250			
			< 3.6 mA = enable off, > 3.8 mA = enable on acc. NAMUR NE43			
Input Capacitance typ.		[nF]	1			
Differential input max.	Code 0	[V]	30 for terminal D and E against PE (terminal G) 11 for terminal D and E against 0V (terminal B)			
	Code 5	[V]	30 for terminal 4 and 5 against PE (terminal ⏚) 11 for terminal 4 and 5 against 0V (terminal 2)			
	Code 7	[V]	30 for terminal D and E against PE (terminal G)			
Enable signal	Code 5/7	[V]	5...30, Ri > 8 kOhm			
Diagnostic signal		[V]	+10...0...-10 / +12.5 V (overload), rated max. 5 mA			
EMC			EN 61000-6-2, EN 61000-6-4			
Electrical connection	Code 0/7		6 + PE acc. EN 175201-804			
	Code 5		11 + PE acc. EN 175201-804			
Wiring min.	Code 0/7	[mm²]	7 x 1.0 (AWG16) overall braid shield			
	Code 5	[mm²]	8 x 1.0 (AWG16) overall braid shield			
Wiring length max.		[m]	50			

[1] If valves with onboard electronics are used in safety-related parts of control systems, in case the safety function is requested, the valve electronics voltage supply is to be switched off by a suitable switching element with sufficient reliability.

[2] Flow rate for different Δp per control edge: $Q_x = Q_{Nom.} \cdot \sqrt{\frac{\Delta p_x}{\Delta p_{Nom.}}}$

[3] Measured with load (210 bar pressure drop/two control edges).

Electrical characteristics hybrid option

Duty ratio		100 %		
Protection class		IP 65 in accordance with EN 60529 (with correctly mounted plug-in connector)		
		D41	**D91**	**D111**
Supply voltage	[V]	24	24	24
Tolerance supply voltage	[%]	±10	±10	±10
Current consumption	[A]	1.21	0.96	1.29
Power consumption	[W]	29	23	31
Solenoid connection		Connector as per EN 175301-803		
Wiring min.	[mm²]	3 x 1.5 recommended		
Wiring length max.	[m]	50 recommended		

With electrical connections the protective conductor (PE ⏚) must be connected according to the relevant regulations.

3

Wiring

Code 0, 6 + PE acc. EN 175201-804

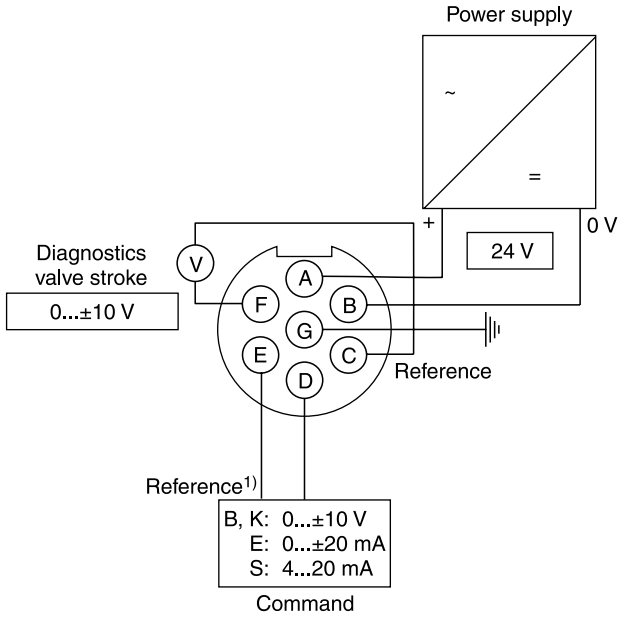

Code 5, 11 + PE acc. EN 175201-804

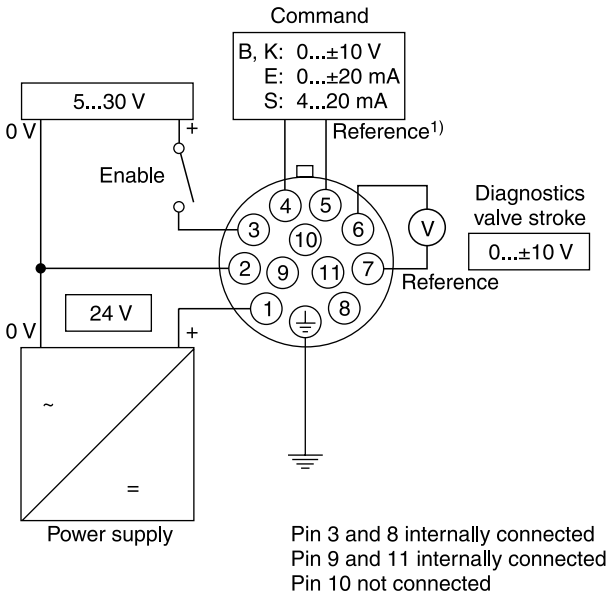

Pin 3 and 8 internally connected
Pin 9 and 11 internally connected
Pin 10 not connected

Code 7, 6 + PE acc. EN 175201-804 + enable

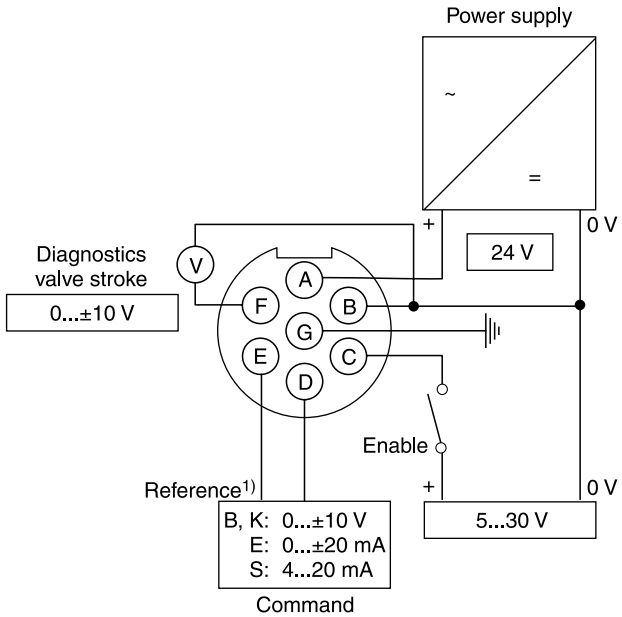

1) Do not connect with supply voltage zero.

3

ProPxD interface program

The ProPxD software allows quick and easy setting of the digital valve electronics. Individual parameters as well as complete settings can be viewed, changed and saved via the comfortable user interface. Parameter sets saved in the non-volatile memory can be loaded to other valves of the same type or printed out for documentation purposes.

The PC software can be downloaded free of charge at www.parker.com/isde – see page “Support" or directly at www.parker.com/propxd.

Features

- Comfortable editing of valve parameters
- Saving and loading of customized parameter sets
- Executable with all Windows® operating systems from Windows® XP upwards
- Simple communication between PC and valve electronics via serial interface RS232C

The valve electronics cannot be connected to a PC with a standard USB cable – this can result in damages of PC and/or valve electronics.

The parametrizing cable may be ordered under item no. 40982923.

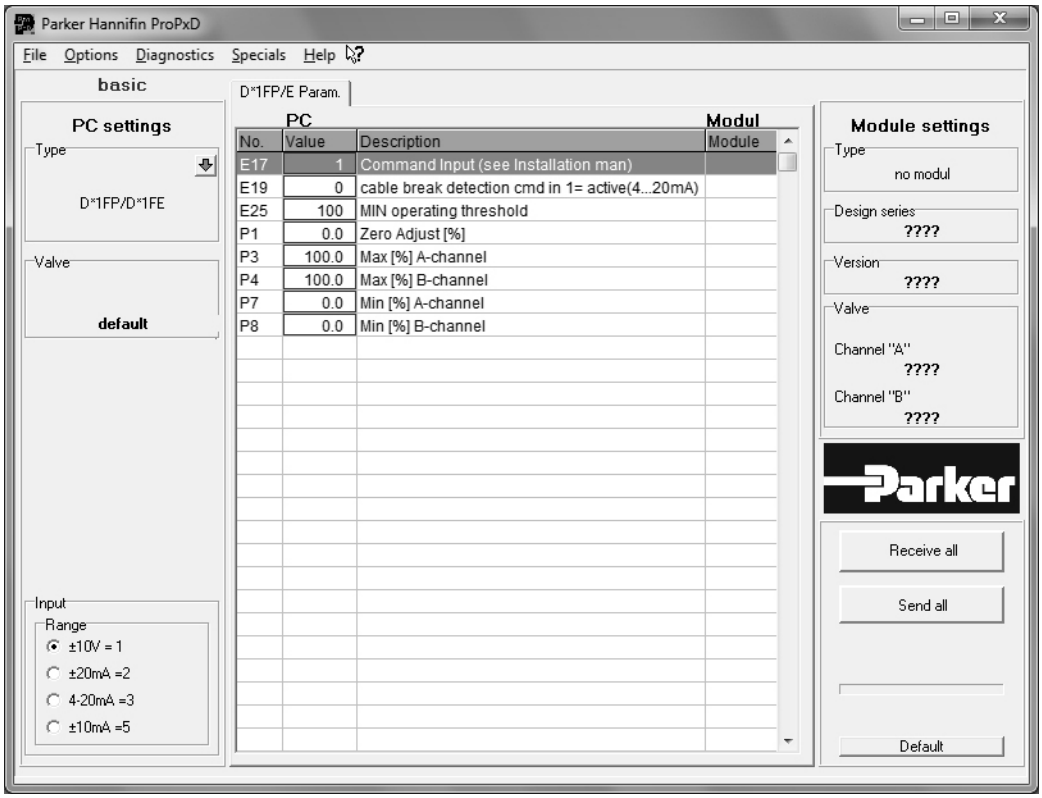

Frequency response

±5 % / ±25 % / ±90 % command signal
Dynamics at 210 bar pilot supply pressure

D31FP

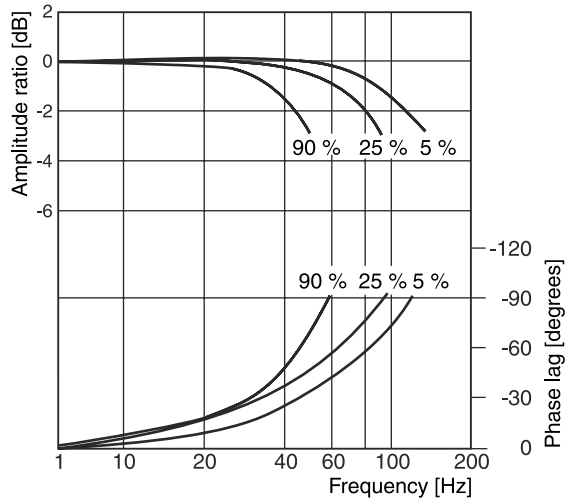

D41FP

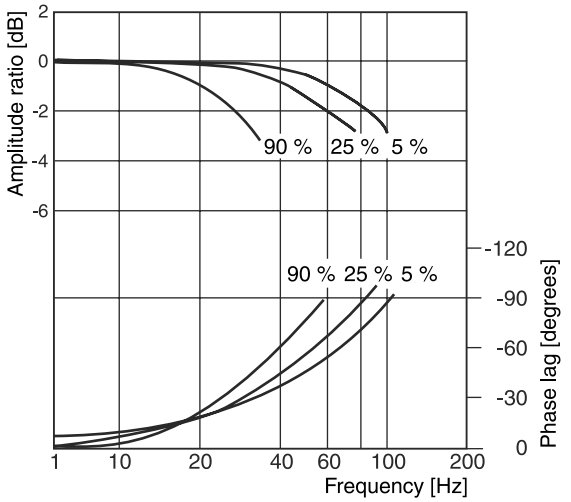

D81/91FP

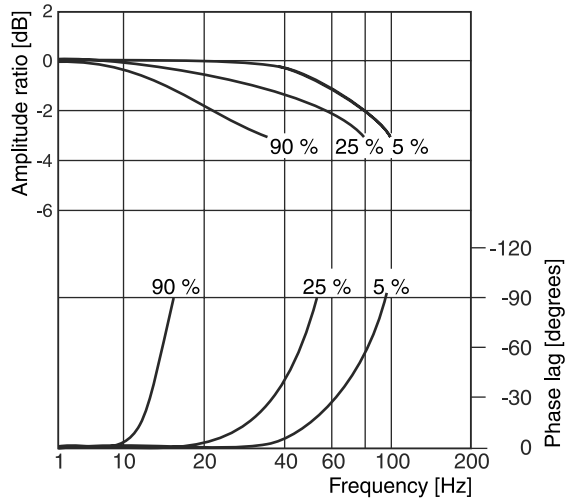

D111FP

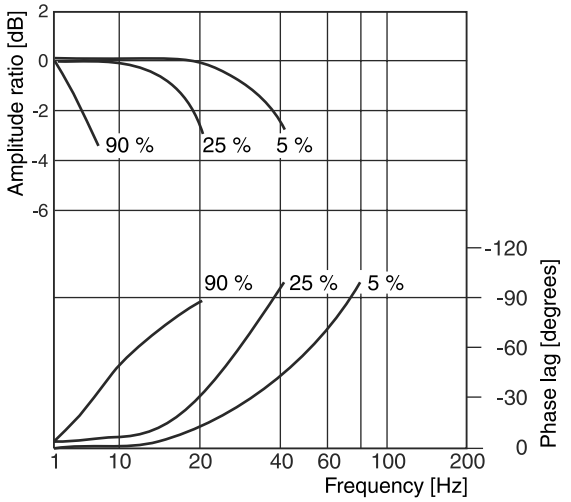

Flow curves D*1FPB/E

(Overlapped spool set to opening point 10 %)
at Δp = 5 bar per metering edge

D31FP

spool type E01/02/52, B31/32/61

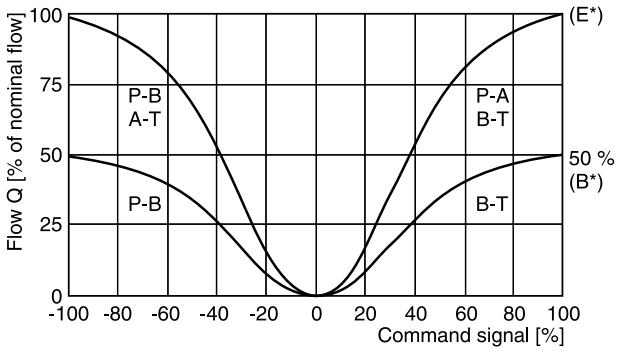

D41FP

spool type E01/02/52, B31/32/61

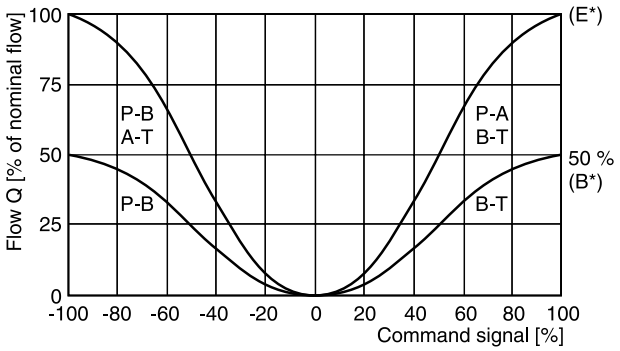

All characteristic curves measured with HLP46 at 50 °C.

3

Flow curves

D81/91FP

Spool type E01/02/52, B31/32/61

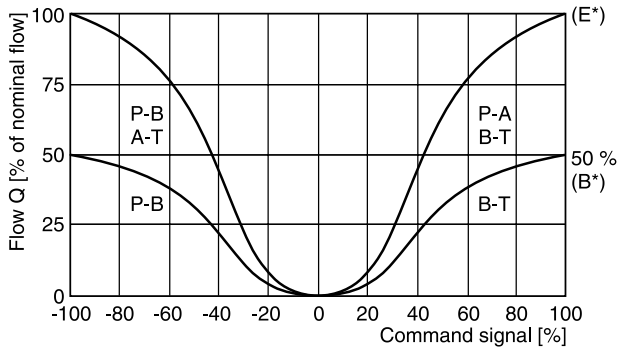

D111FP

Spool type E01/02/52, B31/32/61

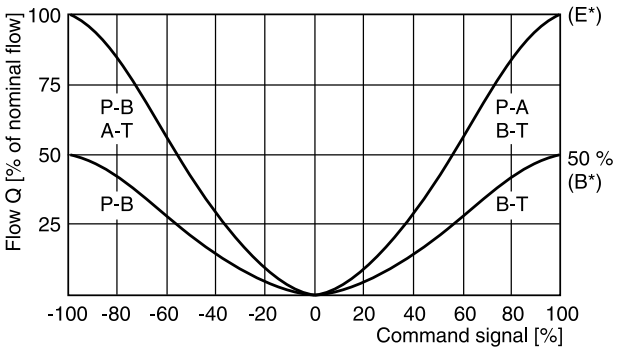

Flow curves D*1FPR/Z

(Overlapped spool set to opening point 10 %)
at Δp = 5 bar per metering edge

D31FP

Spool type R31/32/61

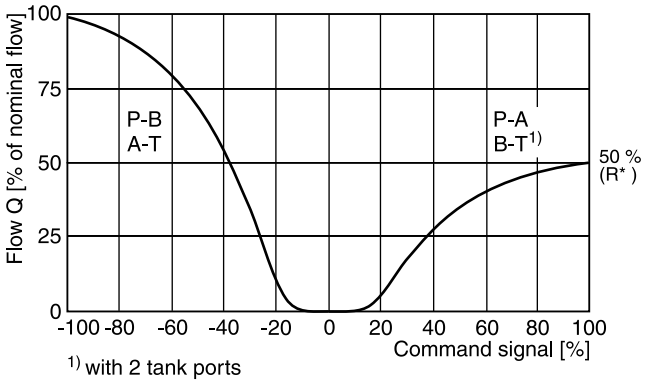

1) with 2 tank ports

D41FP

Spool type R/Z 31/32/61

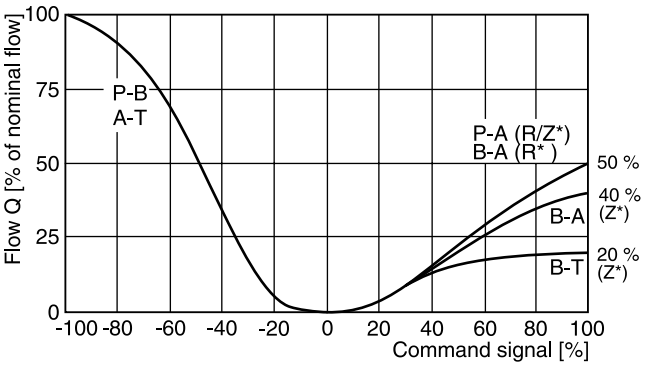

D91FP spool type R/Z 31/32/61

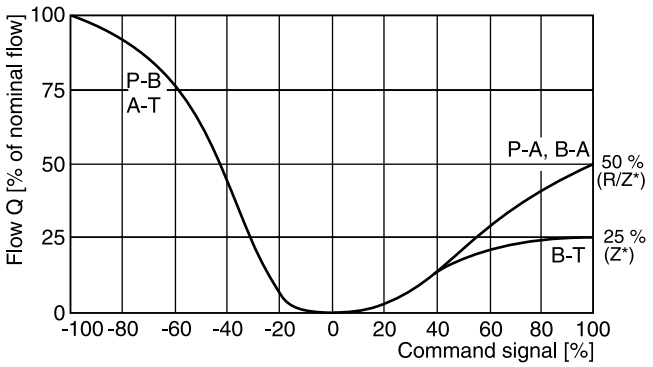

D111FP

spool type R/Z* on request

Detail:
Standard, regenerative and hybrid flow curves

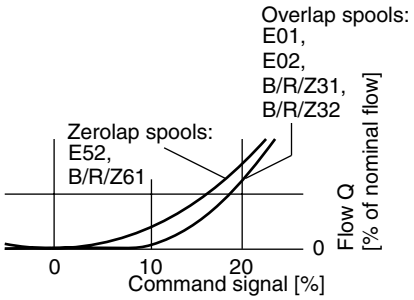

Pilot oil inlet (supply) and outlet (drain)

○ **open,** ● **closed**

Pilot oil Inlet	Drain	B	C
internal	external	○	●
external	external	●	●
internal	internal	○	○
external	internal	●	○

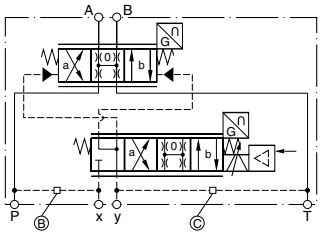

D31FPB/E

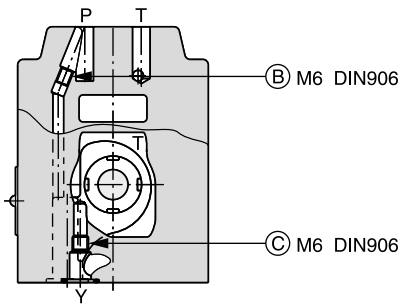

(drawn offset)

D31FPR

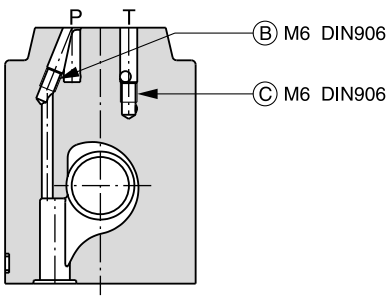

D41FPB/E

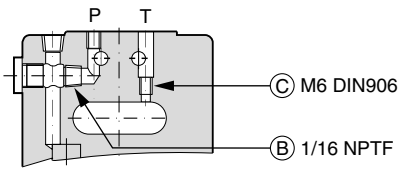

D41FPR

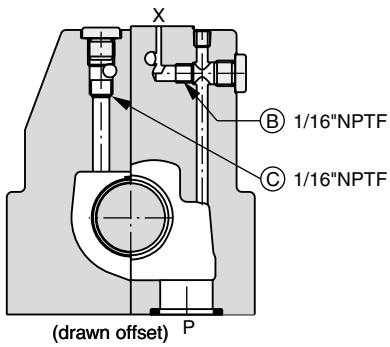

D41FPZ

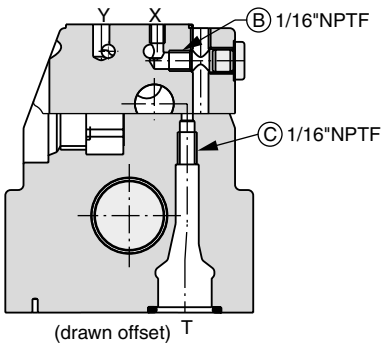

D91FPB/E

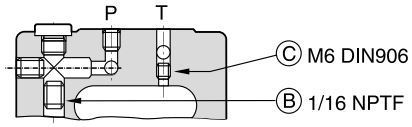

D91FPR

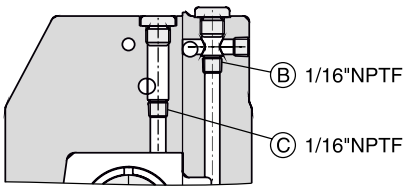

(drawn offset)

D91FPZ

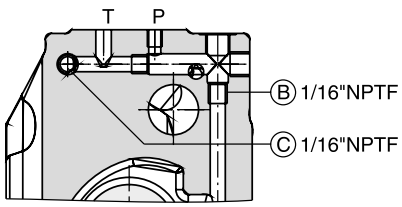

D111FPB/E

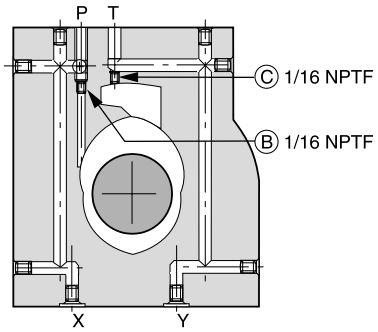

D111FPR

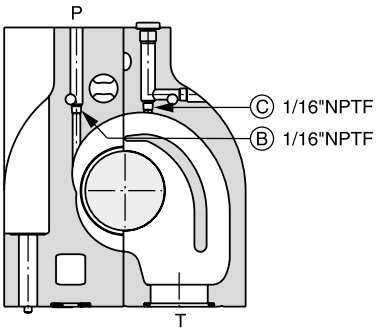

(drawn offset)

D111FPZ

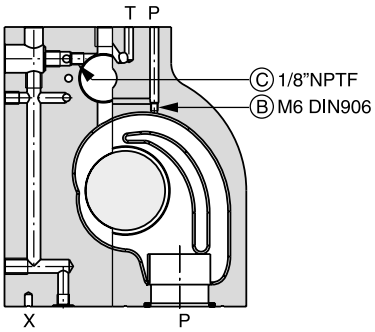

(drawn offset)

3

D31FP

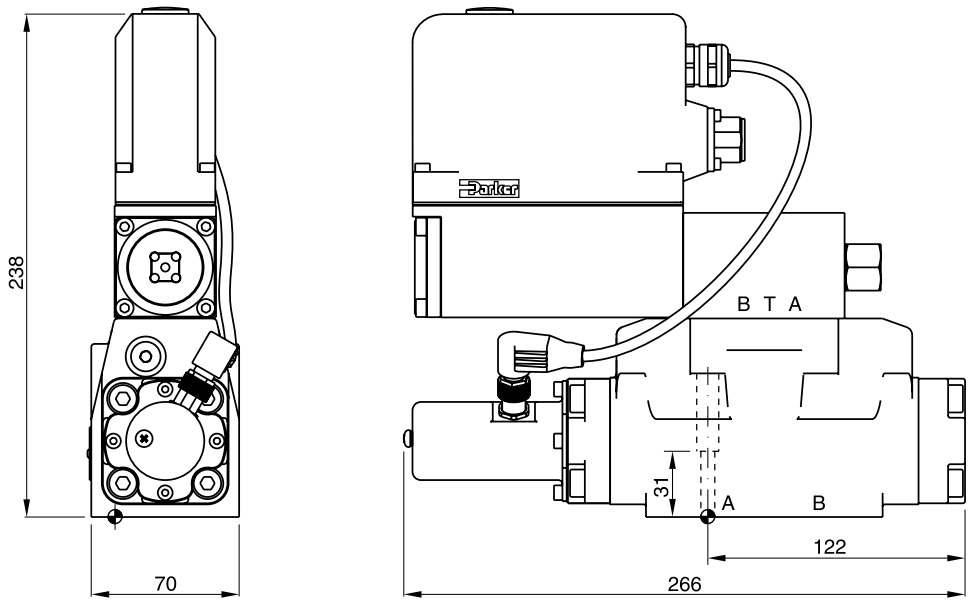

Regenerative and hybrid function with additional plate "A10-1664 / A10-1665L / H10-1662 / H10-1666L", see chapter 12.

Surface finish	Kit			Kit
$R_{max}6.3$ 0.01/100	BK385	4x M6x40 ISO 4762-12.9	13.2 Nm ±15 %	NBR: SK-D31FP FPM: SK-D31FP-V

D41FP

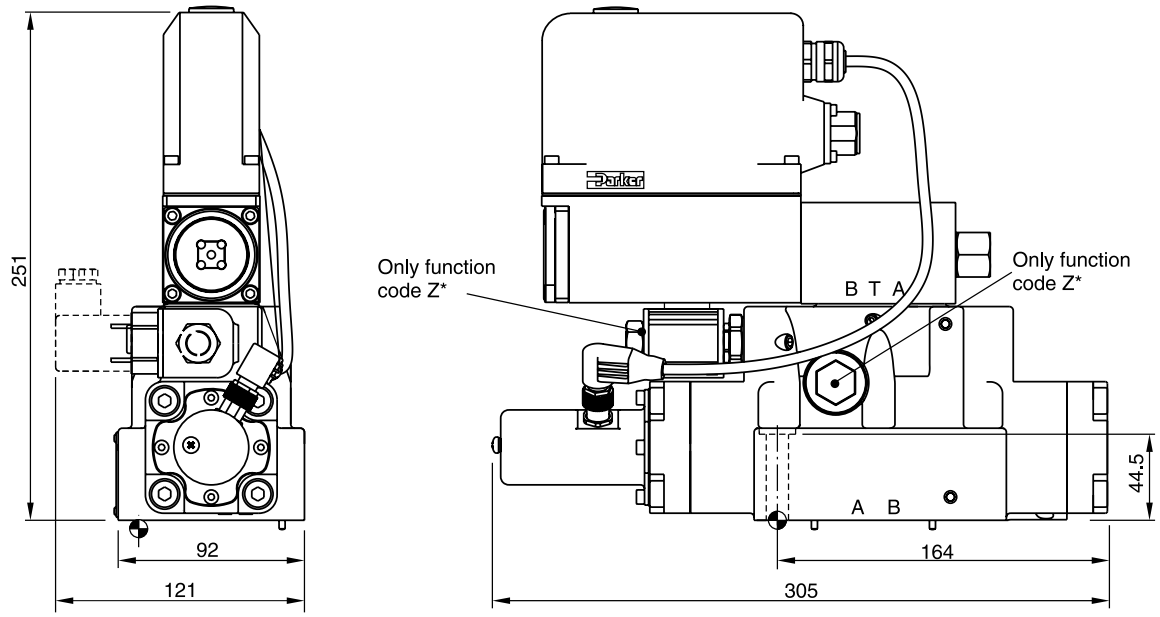

Surface finish	Kit			Kit
$R_{max}6.3$ 0.01/100	BK320	2x M6x55 4x M10x60 ISO 4762-12.9	13.2 Nm ±15 % 63 Nm ±15 %	NBR: SK-D41FP FPM: SK-D41FP-V

D81/91FP

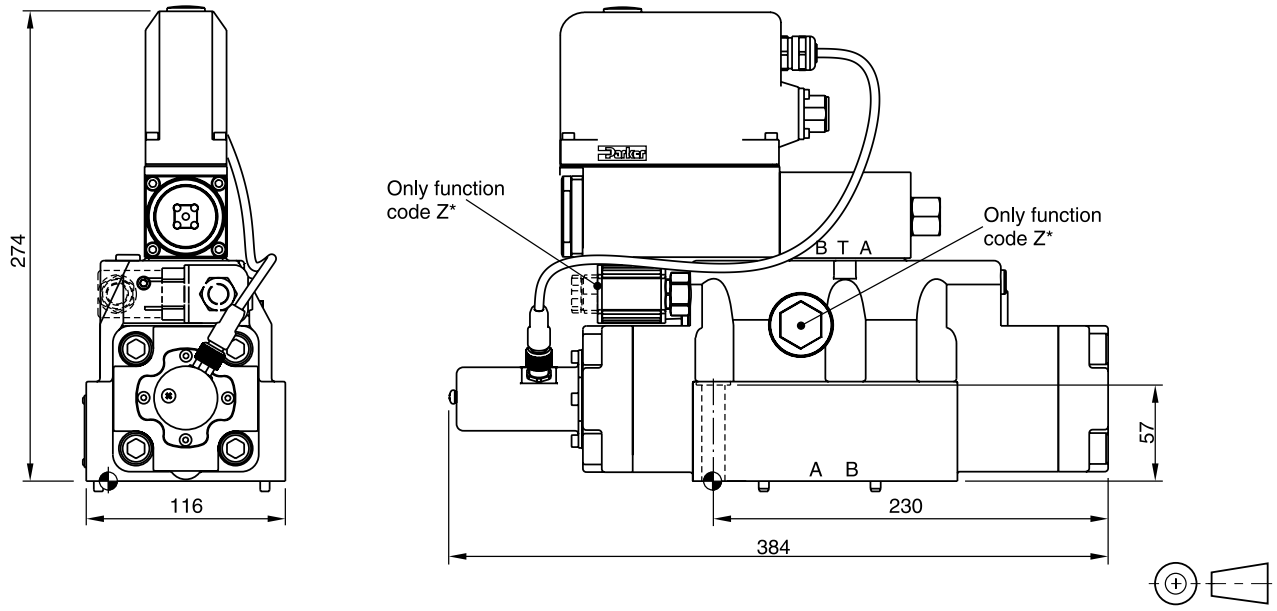

Surface finish	Kit			Kit
$R_{max}6.3$ 0.01/100	BK360	6x M12x75 ISO 4762-12.9	108 Nm ±15 %	NBR: SK-D81/D91FP FPM: SK-D81/D91FP-V

D111FP

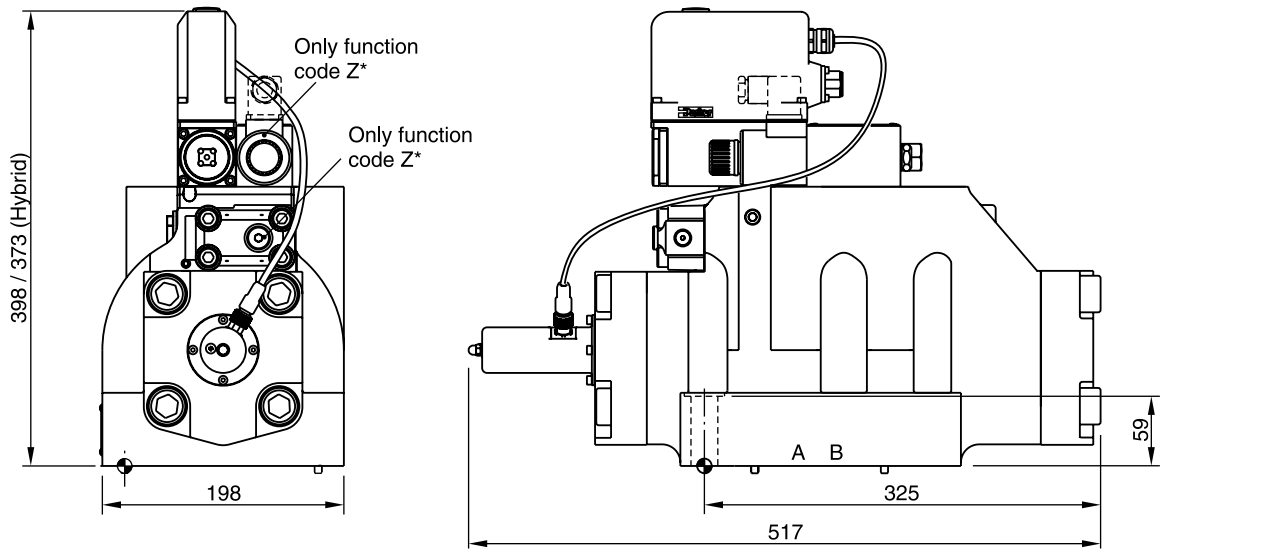

Surface finish	Kit			Kit
$R_{max}6.3$ 0.01/100	BK386	6x M20x90 ISO 4762-12.9	517 Nm ±15 %	NBR: SK-D111FP FPM: SK-D111FP-V

3

Introduction

DFplus valves with EtherCAT interface fulfill the requirements of modern communication between valve and main control. Due to high data transmission speed and short cycle times, the high dynamics of the DFplus valves can be also utilized within the fieldbus system.

The valve is actuated and monitored by the EtherCAT interface. Actual value (spool position), temperature, operating hours and different error messages are available as diagnostic signals. The valve parameters are factory set and can be adapted with the Parker ProPxD software via the parametrizing interface.

In addition to the fieldbus communication, the valves provide the range of functions of the standard version including analogue command signal and diagnostic spare stroke. Thus they can be operated independent of the fieldbus control, particularly during commissioning and maintenance.



D1FP with EtherCAT

The option with EtherCAT is available for the series:

- D1FP, D3FP
- D30FP
- D31FP, D41FP, D81FP, D91FP, D111FP

as well as for cartridge valves TDP, TEP and TPQ in chapter 8.

Features EtherCAT interface

- EtherCAT interface, 2x M12x1, connector 4-Pin (EtherCAT In and EtherCAT Out)
- High dynamics
- High flow capacity
- Onboard electronics

Technical Data

Electrical			
Duty ratio		[%]	100
Protection class			IP65 in accordance with EN 60529 (with correctly mounted plug-in connector)
Supply voltage/ripple		[V]	22 ... 30, electric shut-off at < 19, ripple < 5 % eff., surge free
Current consumption max.		[A]	3.5
Pre fusing		[A]	4.0 medium lag
Differential input		[V]	30 for terminal D and E against PE (terminal G)
Diagnostic signal		[V]	+10...0...-10 / +12.5 error detection, rated max. 5 mA
EMC			EN 61000-6-2, EN 61000-6-4
Electrical connection			6 + PE acc. to EN 175201-804
EtherCAT interface			2 x socket M12x1: 5p acc. to IEC61076-2-101
Wiring min.		[mm²]	3 x 1.0 (AWG16) overall braid shield
Wiring length max.		[m]	50
Wiring EtherCAT			acc. to CiA DS-301 Version 4 / Twisted pair cable acc. to ISO11898
EtherCAT profiles			Communication Layer IEC 61158-x-12, 301 Version 4 Device Profile in accordance with CIA DS - 408 Version 1.5.2 CANopen over EtherCAT (object dictionary)
Functionality			One PDO (Receive) One PDO (Transmit) BUS-cycle time down to 0.250 mSec.
Parameterization			
Interface			RS 232, parametrizing cable order code 40982923
Interface program			ProPxD (see www.parker.com/propxd)
Adjustment ranges	Min	[%]	0...50
	Max	[%]	50...100
	Ramp	[%]	0...32.5

The EtherCAT option is also available for the cartridge valves in chapter 8, series TDP, TEP and TPQ

Direct operated proportional DC valve

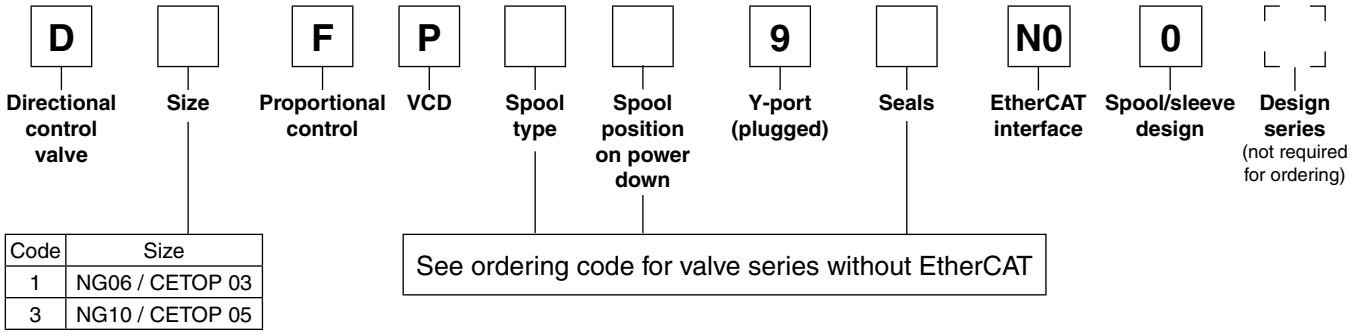

Code	Size
1	NG06 / CETOP 03
3	NG10 / CETOP 05

Pilot operated proportional DC valve

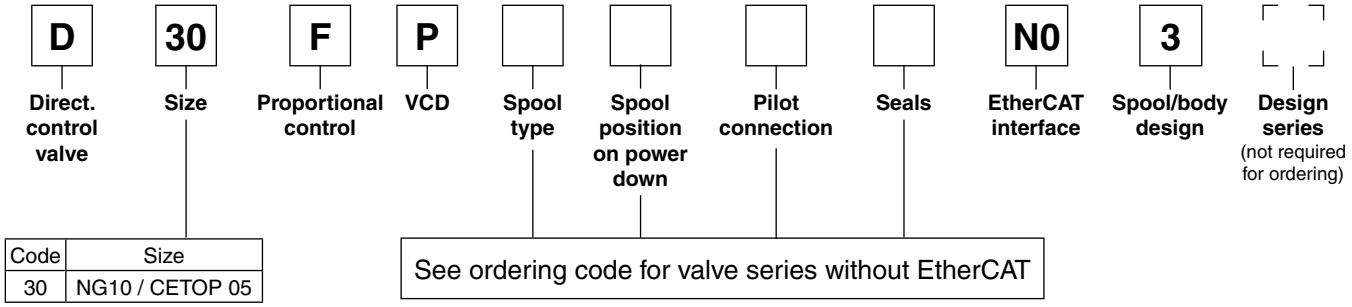

Code	Size
30	NG10 / CETOP 05

Pilot operated proportional DC valve

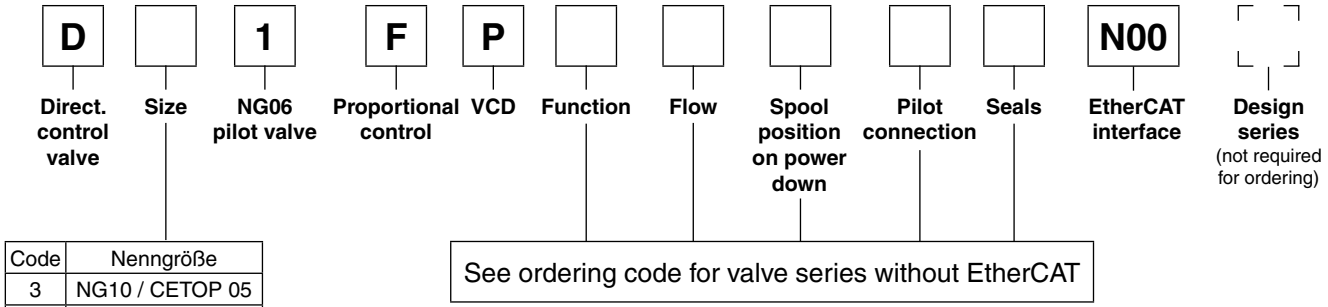

Code	Nenngröße
3	NG10 / CETOP 05
4	NG16 / CETOP 07
8	NG25 / CETOP 08
9	NG25 / CETOP 08
11	NG32 / CETOP 10

Please order connector separately, see chapter 3 accessories.
Parametrizing cable OBE → RS232, item no. 40982923

3

Block diagram

EtherCAT

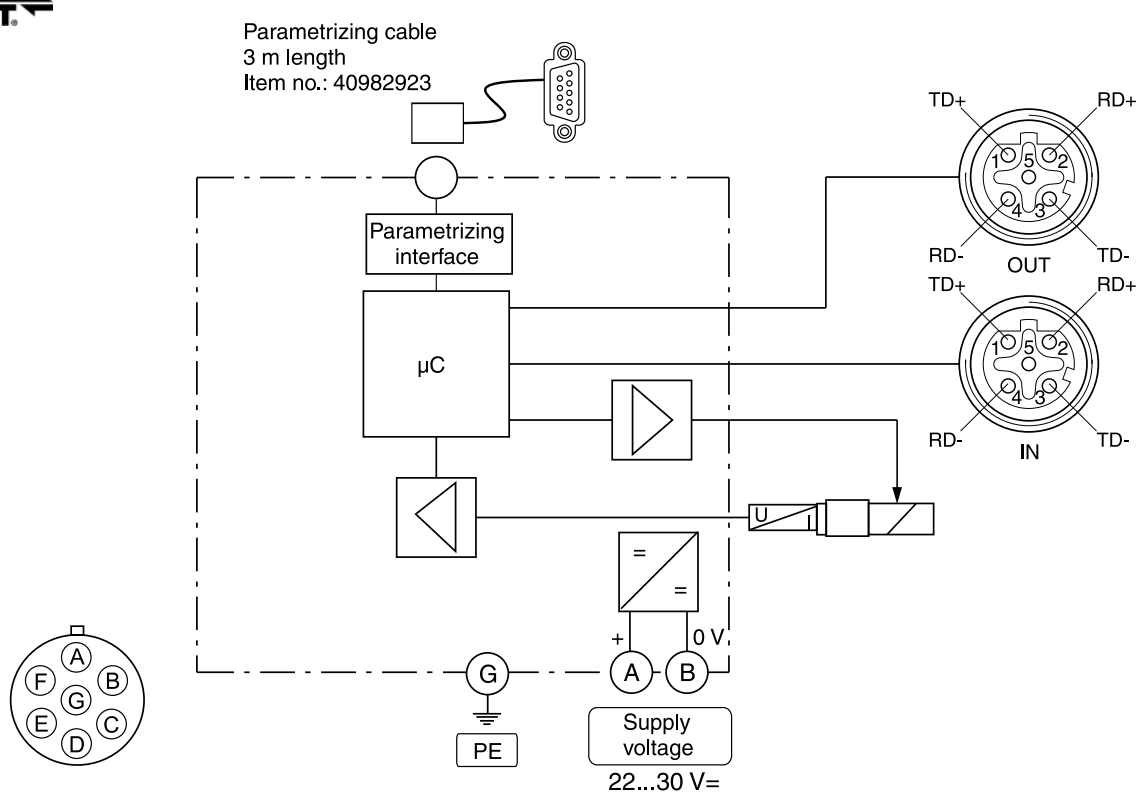

Dimensions D1FP with EtherCAT

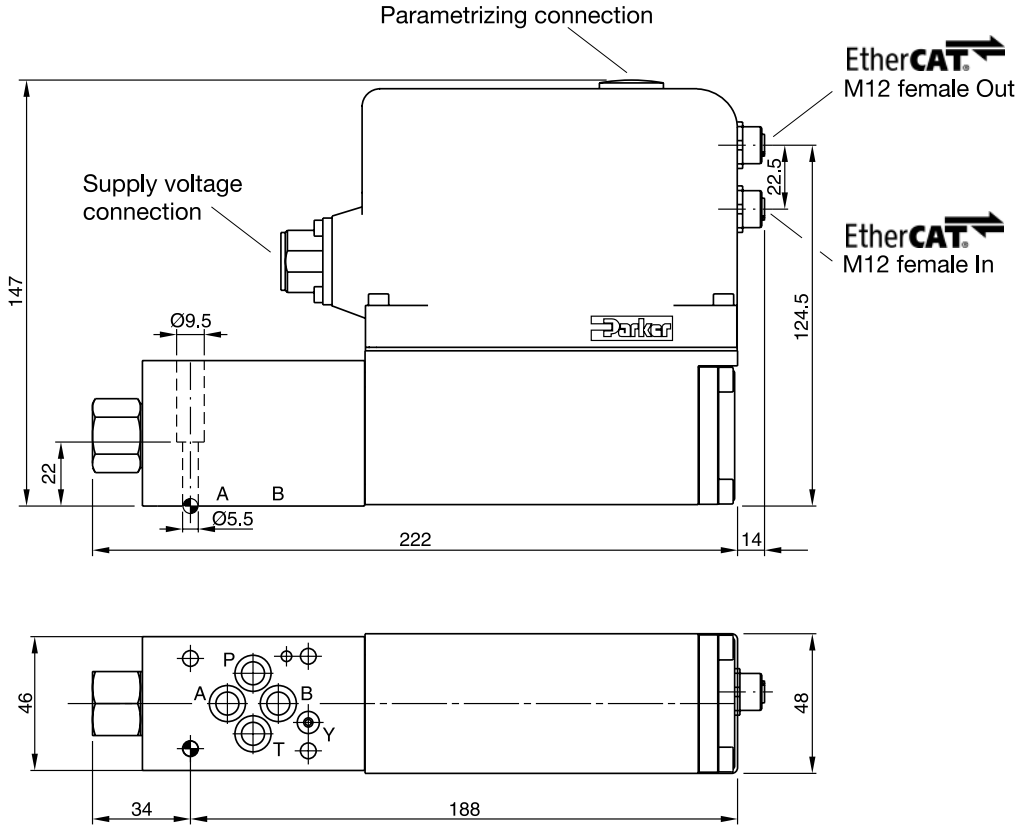

Solenoid connector
D*FB, D*1FB, D1FV

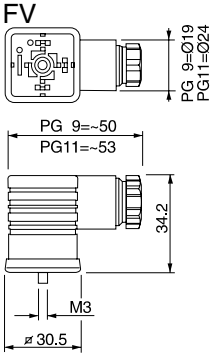

Description	Variation	Order no.
EN 175301-803 2+PE	PG 9 black B	5001710
EN 175301-803 2+PE	PG 9 grey A	5001711
EN 175301-803 2+PE	PG 11 black B	5001716
EN 175301-803 2+PE	PG 11 grey A	5001717

3

Plug kit DT04-2P “Deutsch“
D1FB, D*1FB, D1FV

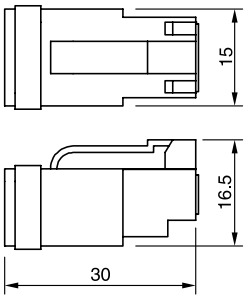

Description	Order no.
Connector DT04-2P “Deutsch“	45216087

Monitor switch connector
D*1FB, D*1FC

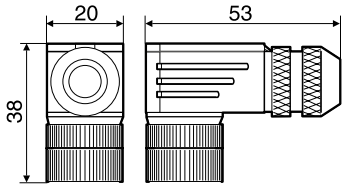

Description	Order no.
IEC 61076-2-101 M12 / 4 + PE	5004109

Central connector
D*FB*0 OBE, D*1FB*0 OBE, D1FV*0 OBE, D*FC*0, D*1FC*0/7, D*FP*0/7, D*1FP*0/7

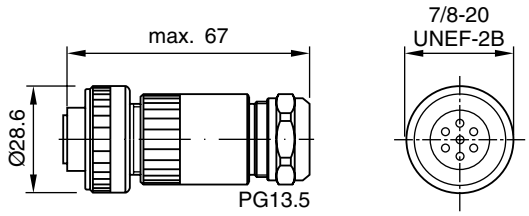

Description	Order no.
EN 175201-804 6 + PE	5004072

Central connector
D*FB*5 OBE, D*1FB*5 OBE, D1FV*5 OBE, D*FC*5, D*FP*5, D*1FP*5

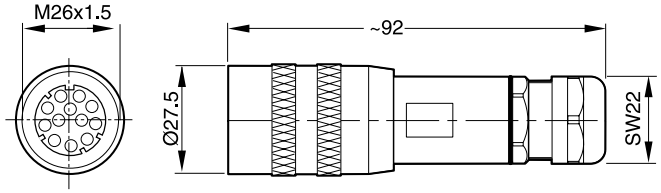

Description	Order no.
EN 175201-804 11 + PE	5004711

3

Solenoid kit
A solenoid kit contains tube, coil, retainer and seals for the solenoid.

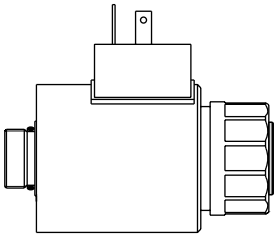

Coil kit
A coil kit contains coil, retainer and seals for the coil.

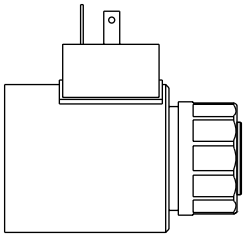

D1FB

Solenoid kits: D1FBS...		(Example: AK-D1FBSJW014)		
Voltage	**Voltage code**	**Connector as per EN 175301-803**	**Design**	**Design series**
9 V / 2.7 A	M	W	0	14
12 V / 2.2 A	K	W	3	14
24 V / 0.8 A	J	W	0	14
24 V / 1.1 A	J	W	3	14

Coil kits: D1FBC...		(Example: AK-D1FBCJW313)		
Voltage	**Voltage code**	**Connector as per EN 175301-803**	**Design**	**Design series**
9 V / 2.7 A	M	W	0	14
12 V / 2.2 A	K	W	3	10
24 V / 0.8 A	J	W	0	14
24 V / 1.1 A	J	W	3	13

D3FB

Solenoid kits: D3FBS...		(Example: AK-D3FBSKW12)	
Voltage	**Voltage code**	**Connector as per EN 175301-803**	**Design series**
12 V / 2.95 A	K	W	12
24 V / 1.5 A	J	W	12

Coil kits: D3FBC...		(Example: AK-D3FBCKW12)	
Voltage	**Voltage code**	**Connector as per EN 175301-803**	**Design series**
12 V / 2.95 A	K	W	12
24 V / 1.5 A	J	W	12

Size 6, mounting pattern to ISO 4401-03-03-0-05

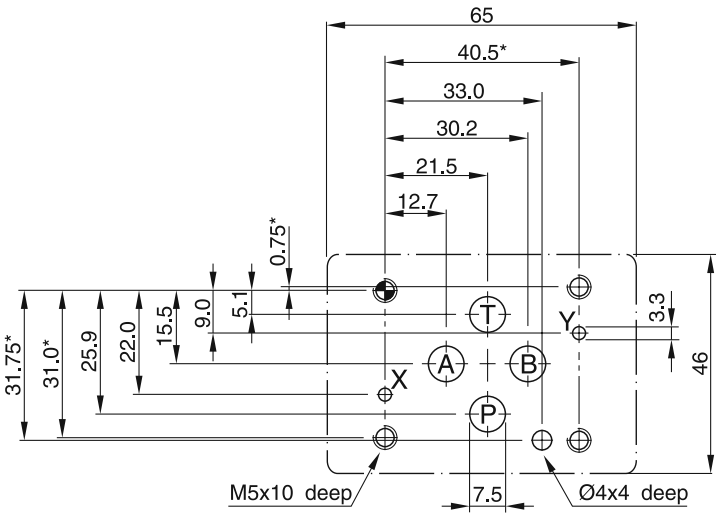

Size 10, mounting pattern to ISO 4401-05-05-0-05

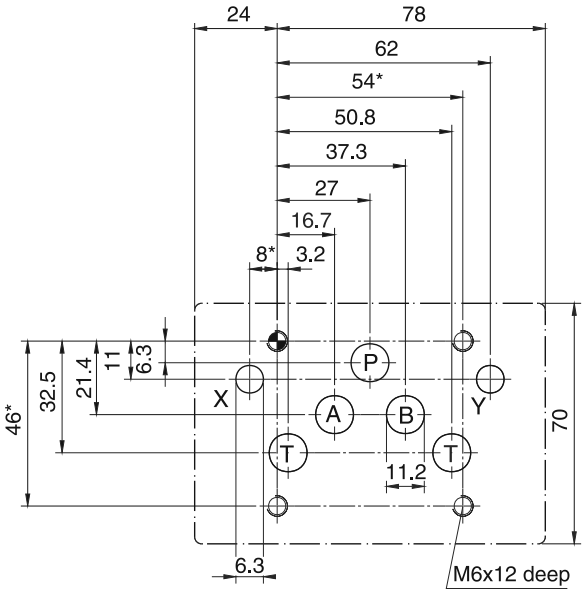

Deviating from ISO 4401
these diameters are possible:
X, Y = Ø 8 max.

Size 16, mounting pattern to ISO 4401-07-07-0-05

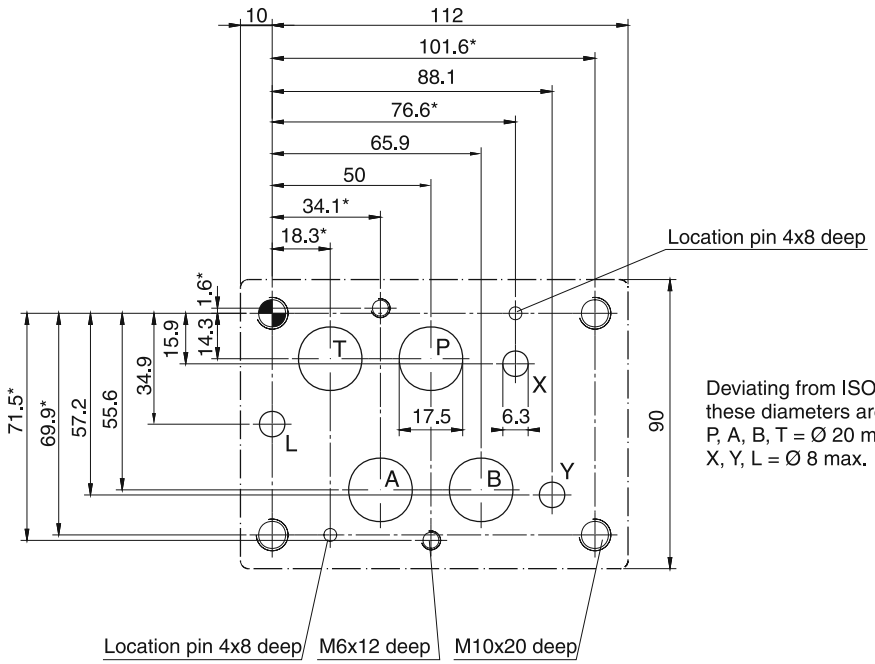

Deviating from ISO 4401
these diameters are possible:
P, A, B, T = Ø 20 max.
X, Y, L = Ø 8 max.

With * marked dimensions ± 0.1mm. All other dimensions ± 0.2mm.
Subplates and manifolds see chapter 12.

3

Size 25, mounting pattern to ISO 4401-08-08-0-05

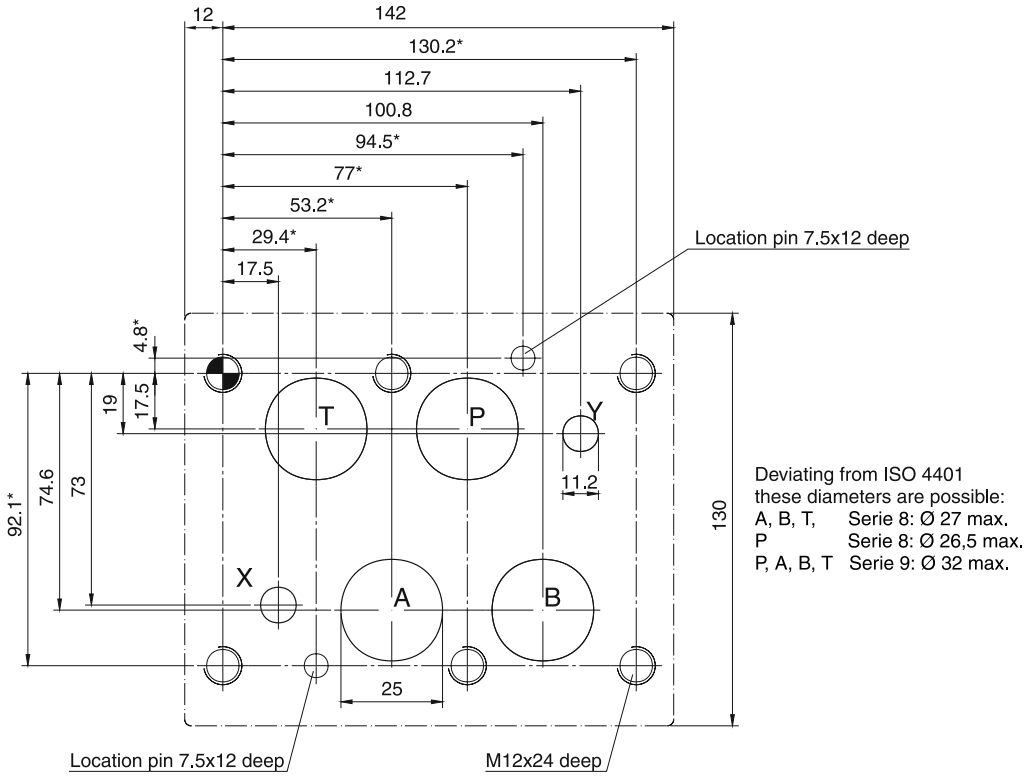

Size 32, mounting pattern to ISO 4401-10-09-0-05

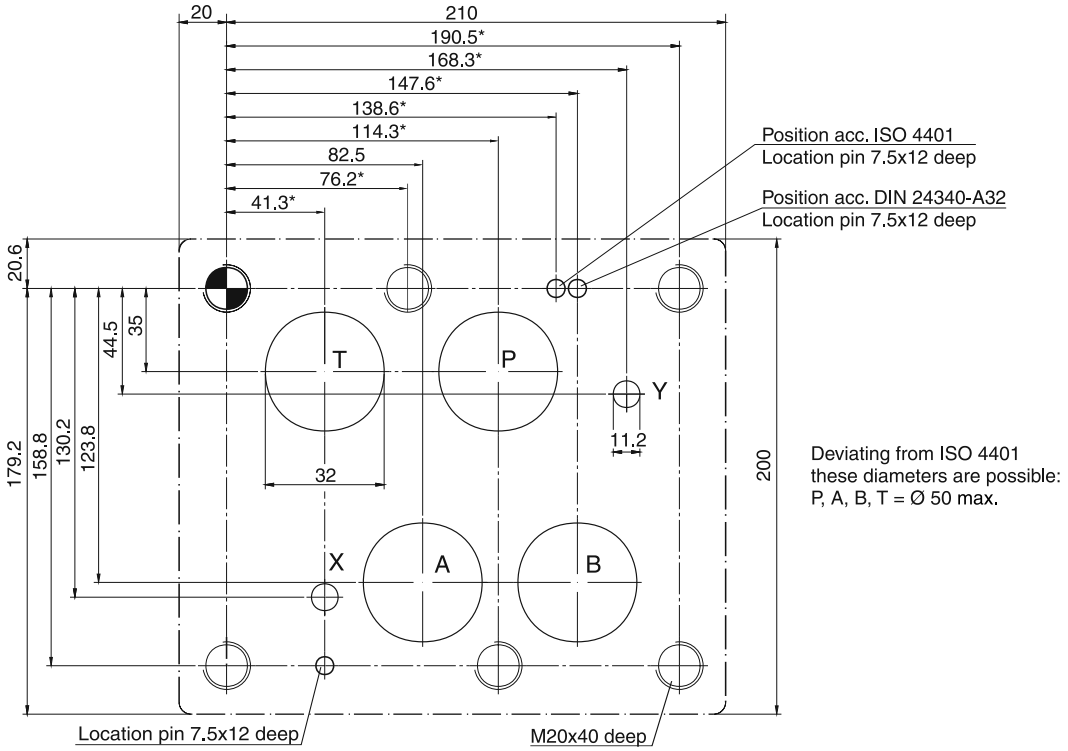

With * marked dimensions ± 0.1mm. All other dimensions ± 0.2mm.
Subplates and manifolds see chapter 12.

Series	Description	Size						Mounting			Operation		Page
	Parker Standard DIN / ISO	06	10	06	10	25	32	Subplate	Panel	Screw-in	Direct	Pilot	
	Pressure relief valves, manual operation												
VS				•				•			•		4-2
VB				•	•			•			•		4-5
VBY				•	•			•				•	4-10
EVSA		•	•							•	•		4-15
R1E02	Remote control valve	•						•	•		•		4-18
R4V/R6V					•	•	•	•				•	4-21
R4V/R6V	According to directive 97/23/EG (TÜV)				•	•	•	•				•	4-30
	Pressure relief valves, proportional operation												
RE06M*W				•				•			•		4-39
RE06M*T				•				•			•		4-43
R4V/R6V					•	•	•	•				•	4-49
R4V/R6V	Onboard electronics				•	•	•	•				•	4-55
VBY*K				•	•			•				•	4-63
	Unloading and sequence valves, manual operation												
R4U					•	•	•	•				•	4-69
R4S					•	•	•	•				•	4-75
	Pressure reducing valves, manual operation												
VM				•	•			•			•		4-78
R4R					•	•	•	•				•	4-83
	Pressure reducing valves, proportional operation												
VMY				•	•			•				•	4-87
R4R					•	•	•	•				•	4-95
	Accessories												
	Plug-in connectors												4-99

More pressure valves are presented in the following chapters:
Chapter 7: Sandwich Valves
Chapter 8: Slip-In Cartridge Valves
Chapter 9: SAE Flange Valves
Chapter 10: Valves for Pipe Mounting

The pressure relief valve series VS is a direct operated spool valve for subplate mounting. The connection and function is according to ISO 6264.



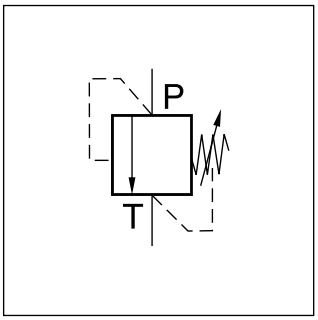

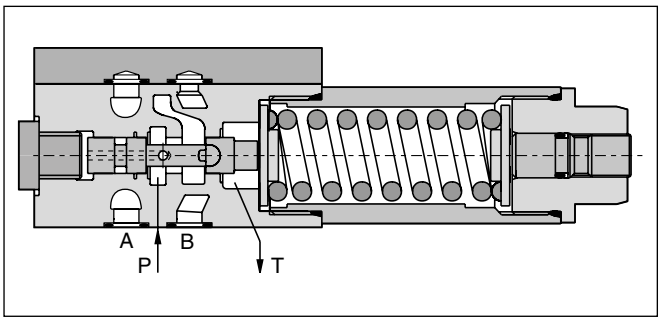

Function

- Spool type valve
- Subplate mounting according to ISO 6264
- 5 pressure stages
- 2 adjustment modes
- Gauge port

4

Ordering code

VS		A	06	V	G		
Pressure relief valve	**Pressure stages**	**Adjustment screw with hexagon socket**	**Nominal size**	**FPM seals**	**Gauge port G1/4“**	**Lock**	**Design series** (not required for ordering)

Code	Pressure stages
025	up to 25 bar
064	**up to 64 bar**
160	**up to 160 bar**
210	**up to 210 bar**
350	up to 350 bar

Code	Lock
omit	**–**
Z	Cylinder lock

Bold letters =
Short-term availability

Technical data

General		
Design		Direct operated relief valve spool type
Nominal size		DIN NG06 / CETOP 03 / NFPA D03
Interface		Subplate mounting according to ISO 6264
Mounting position		unrestricted
Ambient temperature	[°C]	-20...+60
$MTTF_D$ value	[years]	150
Weight	[kg]	1.3
Hydraulic		
Max. operating pressure	[bar]	Port P 350, Port T depressurized
Pressure stages	[bar]	25, 64, 160, 210, 350
Nominal flow	[l/min]	25
Fluid		Hydraulic oil according to DIN 51524
Fluid temperature	[°C]	-20…+70
Viscosity permitted recommended	[cSt] / [mm²/s] [cSt] / [mm²/s]	20…400 30...80
Filtration		ISO 4406 (1999); 18/16/13

p/Q performance curves

Pressure stage 25 bar

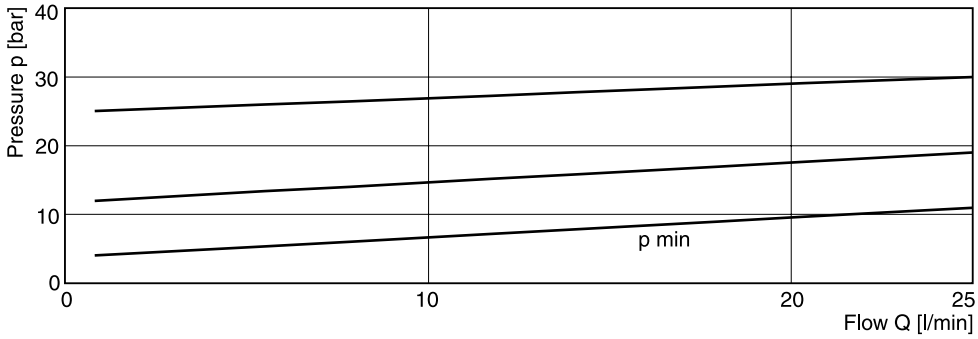

Pressure stage 64 bar

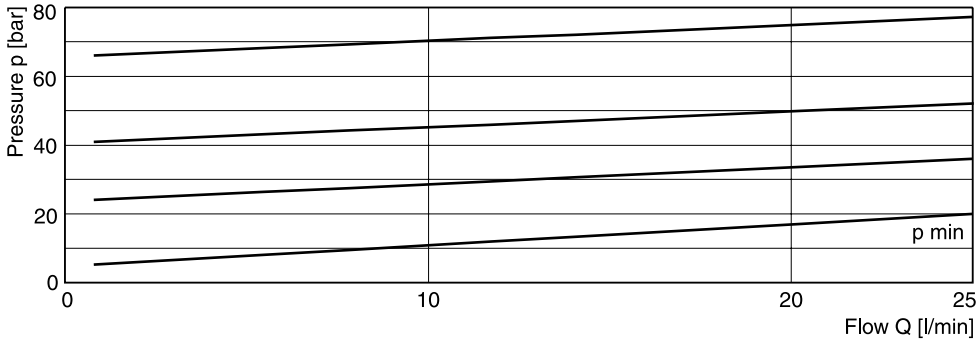

Pressure stage 160, 210 and 350 bar

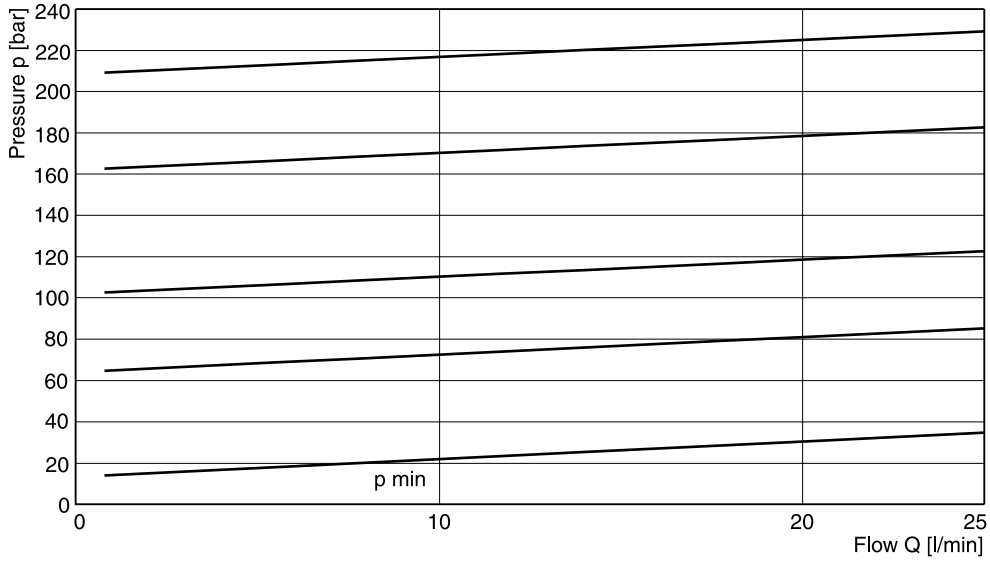

All characteristic curves measured with HLP46 at 50 °C.

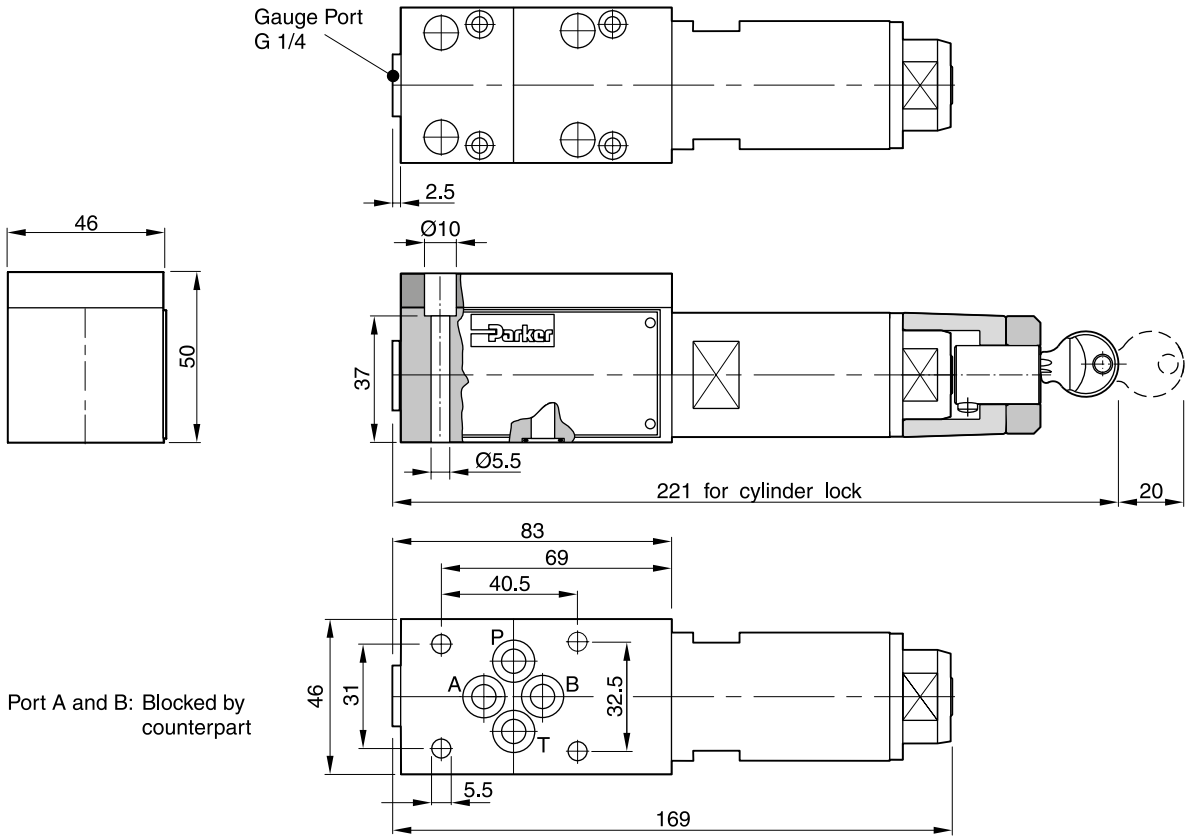

Surface finish	Bolt kit			Kit FPM
R_{max}6.3 ⏥ 0.01/100	BK443	4x M5x45 ISO 4762-12.9	7.6 Nm ±15 %	SK-VB/VM/VS-A06V

Mounting pattern ISO 6264, code 6264-03-04-*-97

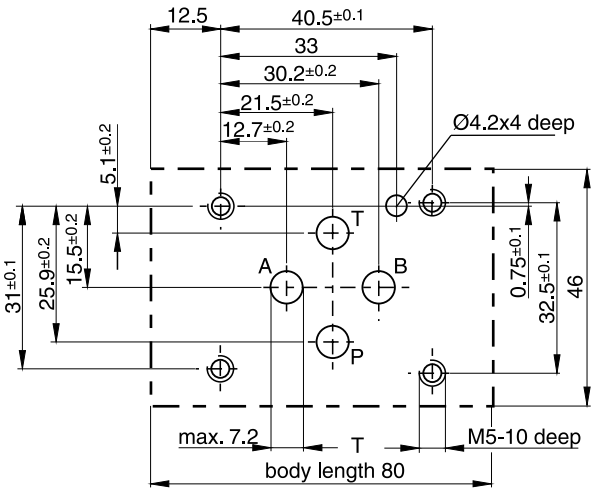

Direct operated pressure relief valve with manual adjustment. The series VB can also be used as a pressure sequence valve, because of the high pressure capability in the outlet port and the external drain port.



VB*A10

Features

- Spool type valve
- Subplate mounting according to ISO 5781
- 5 pressure stages at NG06
- 3 pressure stages at NG10
- 2 adjustment modes

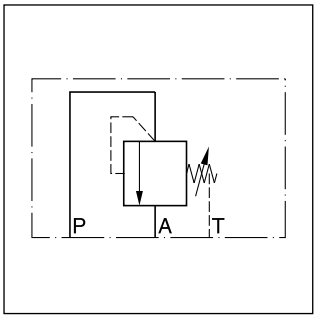

VB*A06

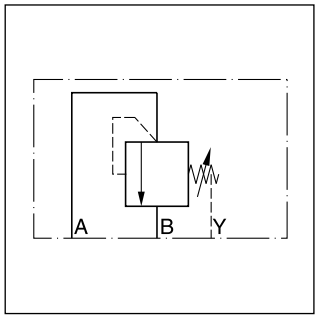

VB*A10

VB*A06

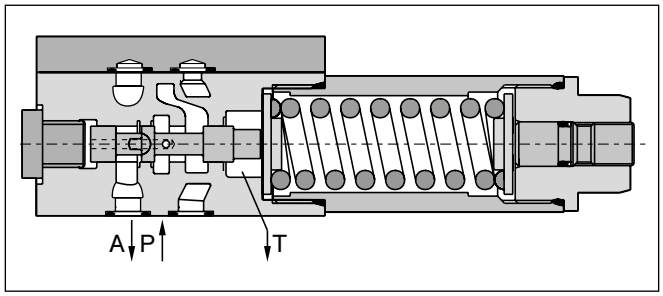

VB*A10

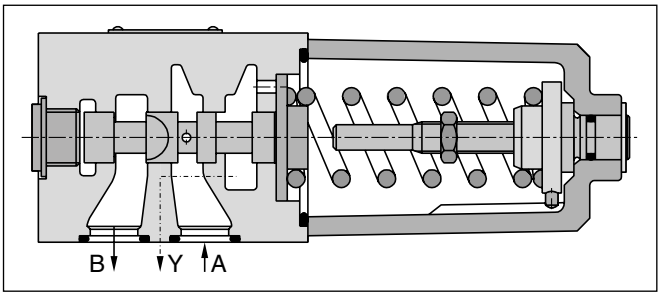

Ordering code

VB		A		V				
Pressure relief valve	**Pressure stages**	**Adjustment screw with hexagon socket**	**Nominal size**	**FPM seals**	**Gauge port**	**Lock**	**Design series** (not required for ordering)	

Code	Pressure stages
025 [1]	up to 25 bar
064	**up to 64 bar**
125 [2]	**up to 125 bar**
160 [1]	**up to 160 bar**
210	**up to 210 bar**
350 [1]	up to 350 bar

Code	Lock
omit	**–**
Z	Cylinder lock

Code	Gauge port
G [1]	**G 1/4”**
M [2]	**M18x1.5**

Code	Nominal size
06	**NG06**
10	**NG10**

[1] Only NG06.
[2] Only NG10.

Bold letters =
Short-term availability

VB UK.indd 25.04.2019

General			
Design		Direct operated pressure relief valve, spool type	
Nominal size		**NG06 (CETOP 03 / NFPA D03)**	**NG10 (CETOP 05 / NFPA D05)**
Interface		Subplate mounting according to ISO 5781	
Mounting position		unrestricted	
Ambient temperature	[°C]	-20...+60	
$MTTF_D$ value	[years]	150	
Weight	[kg]	1.3	3.7
Hydraulic			
Max. operating pressure	[bar]	Port P and A 350 Port T depressurized	Port A and B 350 Port Y depressurized
Pressure stages	[bar]	25, 64, 160, 210, 350	64, 125, 210
Nominal flow	[l/min]	25	60
Fluid		Hydraulic oil according to DIN 51524	
Fluid temperature	[°C]	-20...+70	
Viscosity permitted recommended	[cSt] / [mm²/s] [cSt] / [mm²/s]	20...400 30...80	
Filtration		ISO 4406 (1999); 18/16/13	

4

p/Q performance curves

VB*06

Setting pressure max. 25 bar

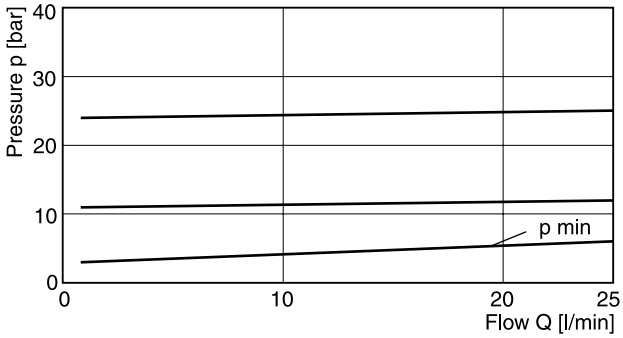

Setting pressure max. 64 bar

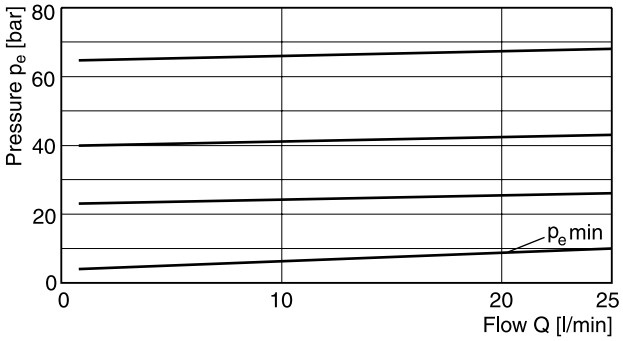

Setting pressure max. 160 or 210 bar

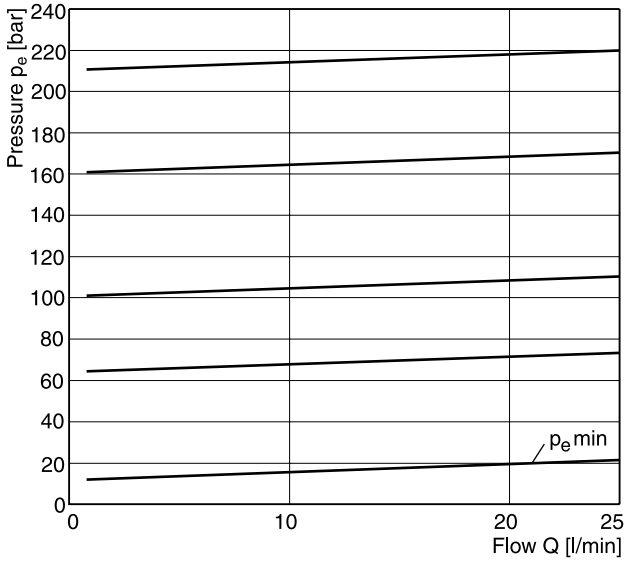

VB*10

Setting pressure max. 64 bar

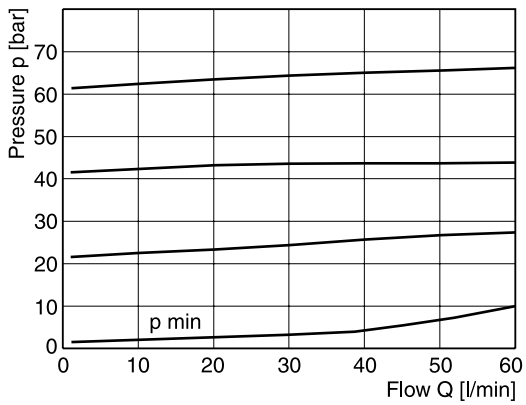

Setting pressure max. 210 bar

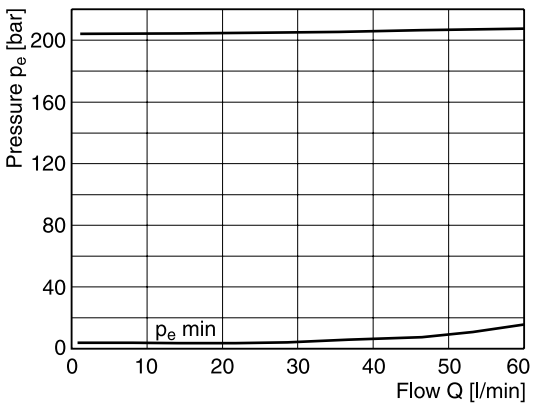

All characteristic curves measured with HLP46 at 50 °C.

NG06

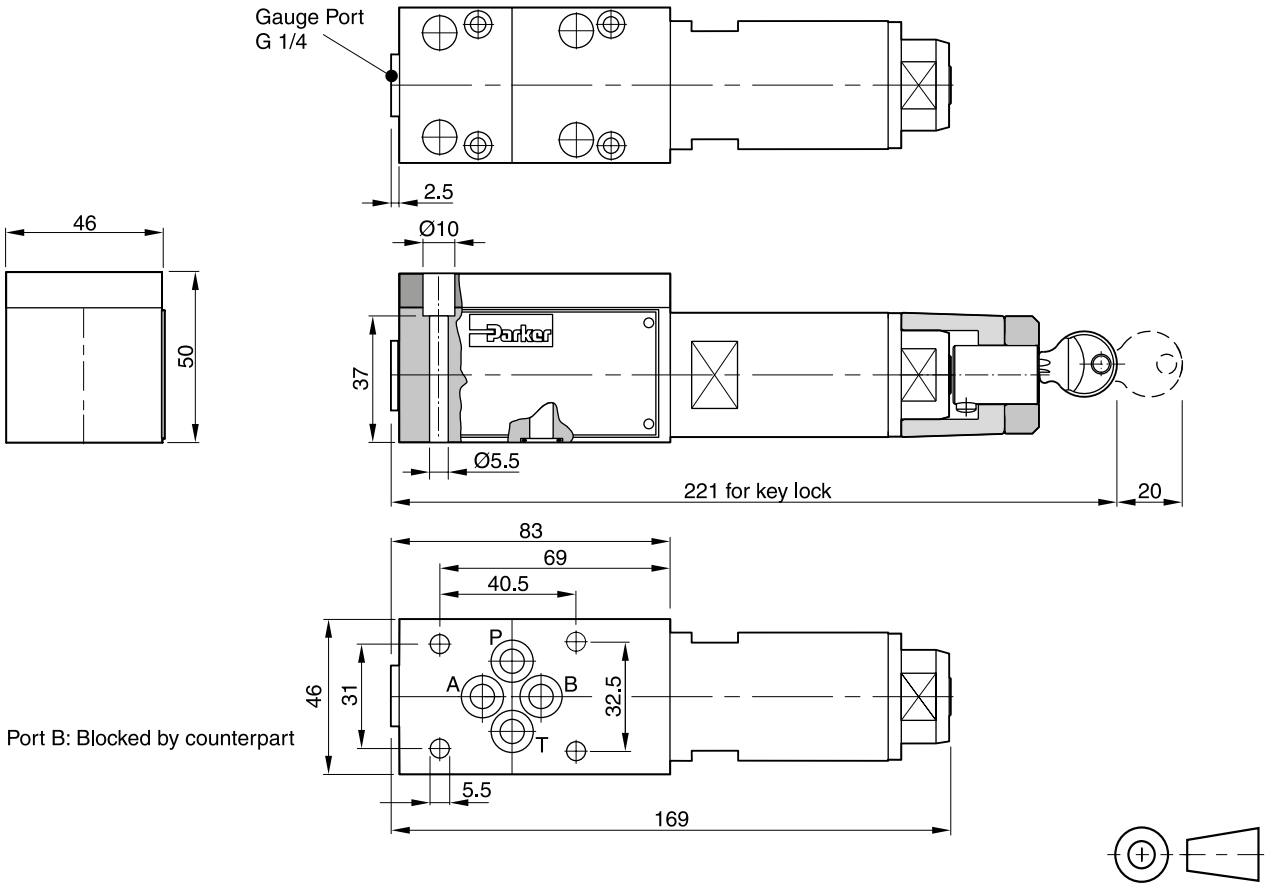

Surface finish	Bolt kit			Kit FPM
$\sqrt{R_{max}6.3}$ 0.01/100	BK443	4x M5x45 ISO 4762-12.9	7.6 Nm ±15 %	SK-VB/VM/VS-A06V

Mounting pattern ISO 5781-03-04-0-00

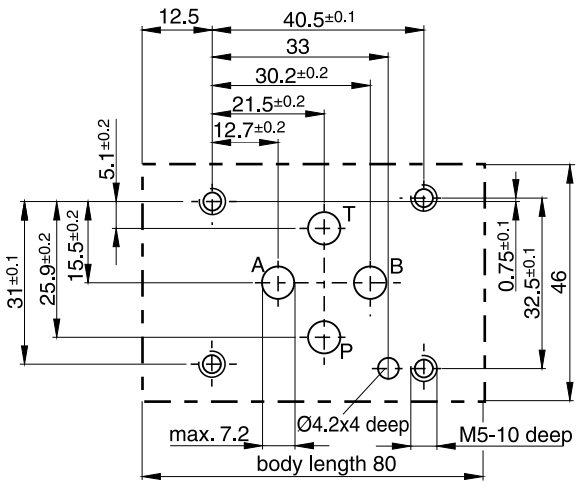

NG10

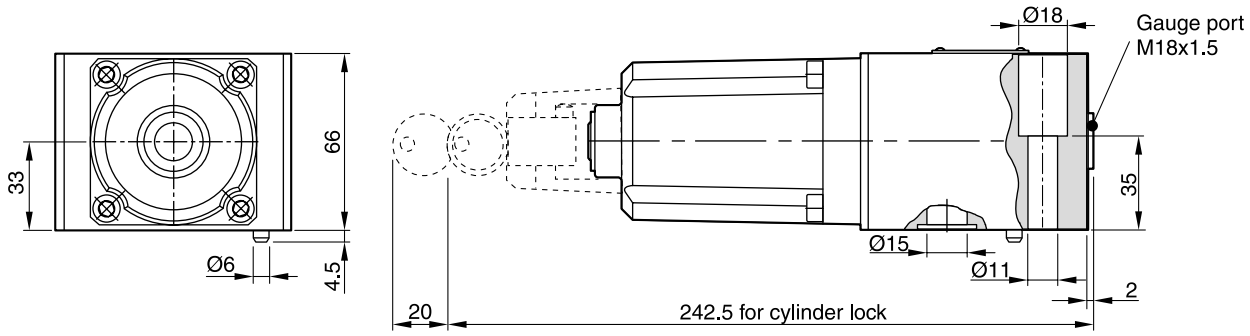

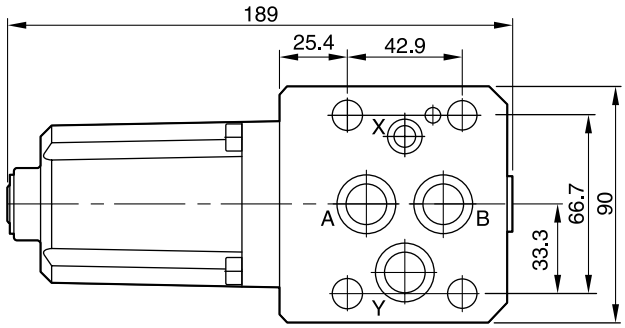

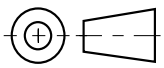

Surface finish	Bolt kit			Kit FPM
$R_{max}6.3$ 0.01/100	BK389	4x M10x50 ISO 4762-12.9	63 Nm ±15 %	SK-VB/VM-A10V

Mounting pattern ISO 5781-06-07-0-00 [1)]

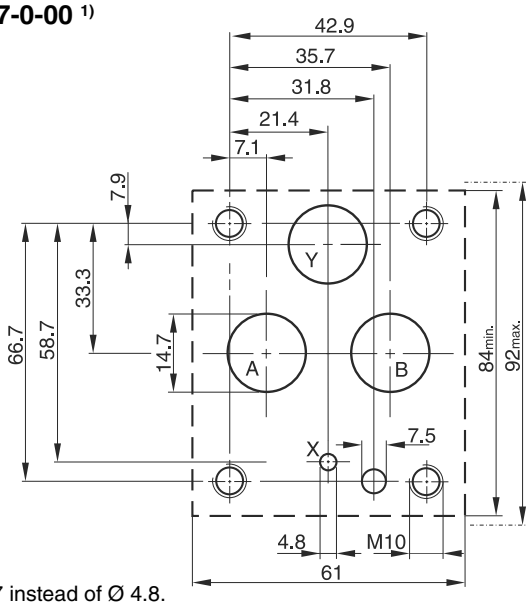

[1)] Deviating from ISO the Y port has Ø 14.7 instead of Ø 4.8.

Pilot operated relief valves of the series VBY consist of a pilot with manual adjustment and a spool type main stage. The valves need to be externally drained.

The series VBY can also be used as pressure sequence valve, because of the high pressure capability in the outlet port and the external drain port.

Features

- Subplate mounting acc. to ISO 5781
- Main stage spool type
- Pilot stage seated type
- 4 pressure stages
- 2 adjustment modes:
  - screw with hexagon socket
  - cylinder lock



VBY*A06



VBY*A10

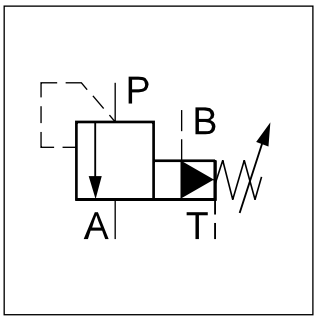

VBY*A06

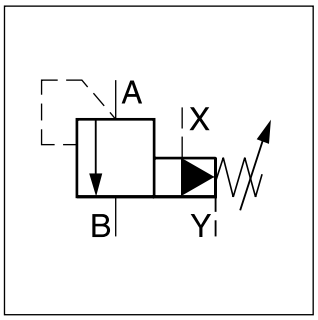

VBY*A10

VBY*A06

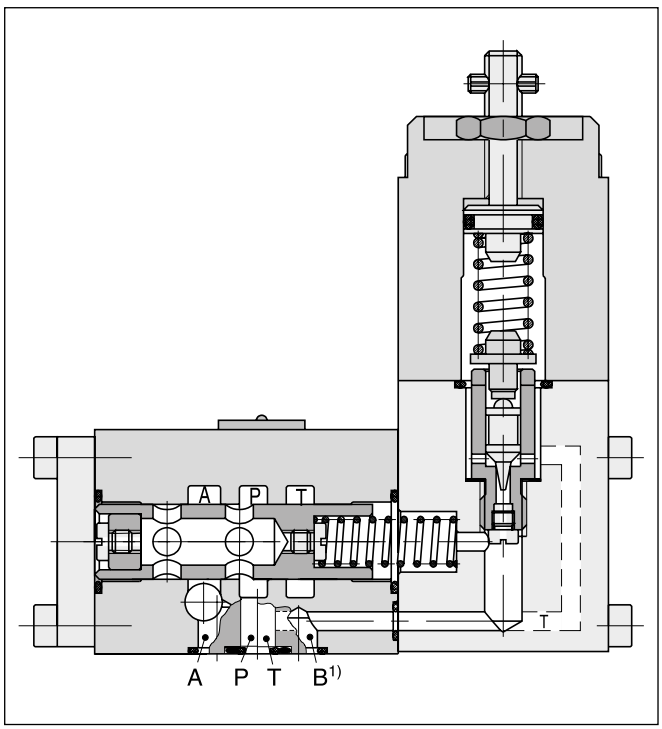

VBY*A10

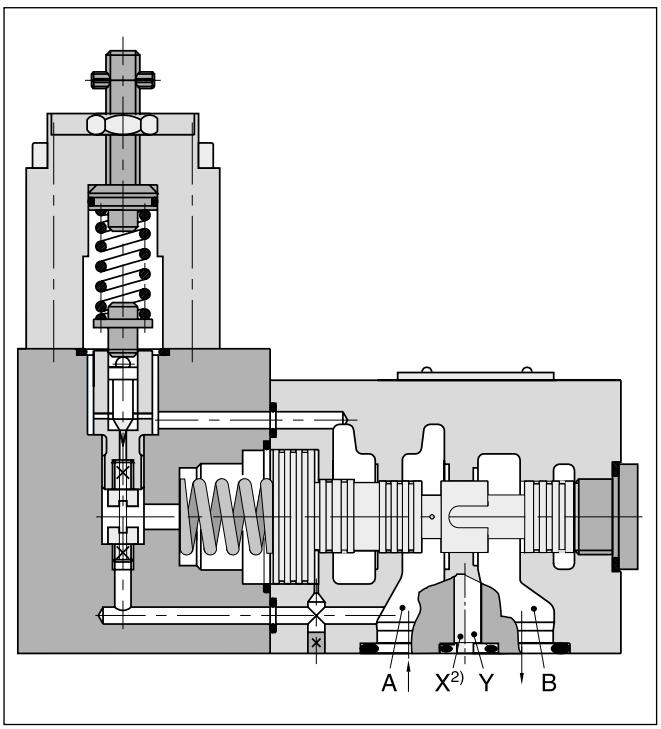

[1] Port B for remote control, otherwise to be blocked.
[2] Port X for remote control, otherwise to be blocked.

Ordering code

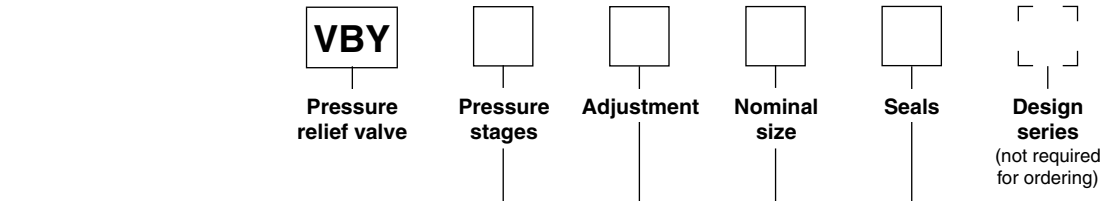

Code	Pressure stages
064	**up to 64 bar**
160	**up to 160 bar**
210	**up to 210 bar**
315	up to 315 bar

Code	Adjustment
A	**Screw with hexagon socket**
H	Cylinder lock

Code	Seals
N	**NBR**
V	FPM

Code	Nominal size
06	**NG06**
10	**NG10**

Bold letters =
Short-term availability

Technical data

General			
Design		Pilot operated pressure relief valve, spool type	
Nominal size		**NG06**	**NG10**
Interface		Subplate mounting according to ISO 5781	
Mounting position		unrestricted	
Ambient temperature	[°C]	-20...+60	
$MTTF_D$ value	[years]	75	
Weight	[kg]	2.4	4.5
Hydraulic			
Max. operating pressure	[bar]	P, A 315, B blocked	A, B 350, X blocked
External drain port pressure	[bar]	T 100	Y 100
Pressure stages	[bar]	64, 160, 210, 315	
Fluid		Hydraulic oil according to DIN 51524	
Fluid temperature	[°C]	-20...+70 (NBR: -25...+70)	
Viscosity, permitted recommended	[cSt] / [mm²/s] [cSt] / [mm²/s]	20…400 30…80	
Filtration		ISO 4406 (1999); 18/16/13	
Nominal flow	[l/min]	See p/Q curves	
Pilot oil flow	[cm³/min]	approx. 500	approx. 1000

4

p/Q performance curves NG06

Max. 64 bar

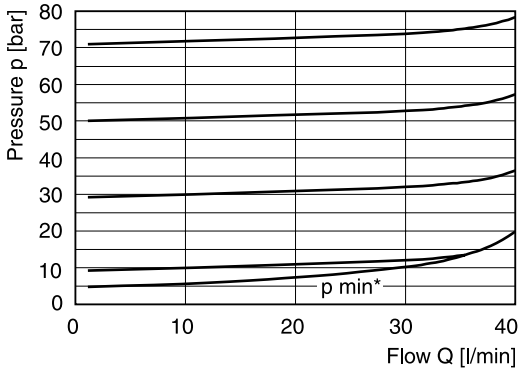

Max. 160 bar

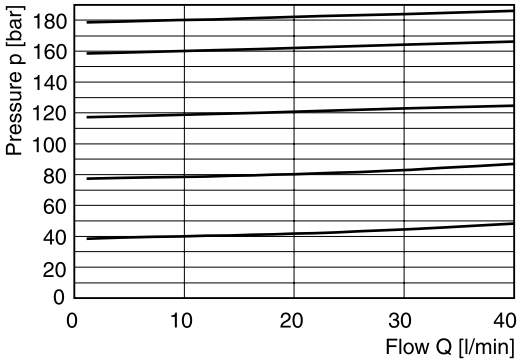

Max. 210 bar

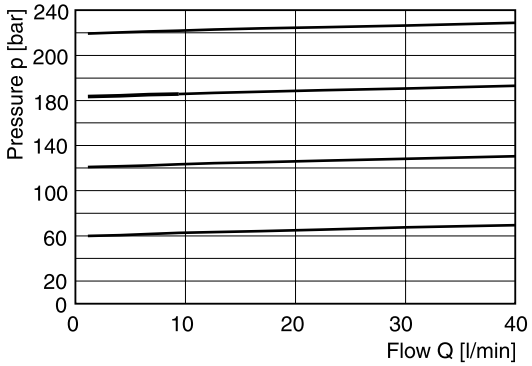

Max. 315 bar

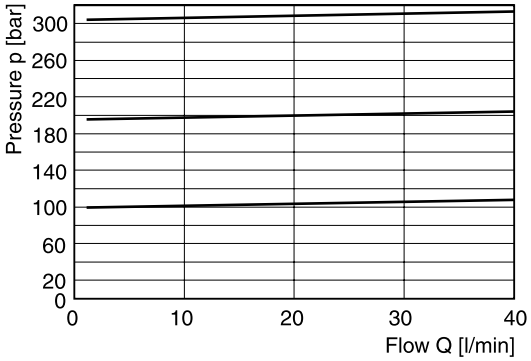

p/Q performance curves NG10

Max. 64 bar

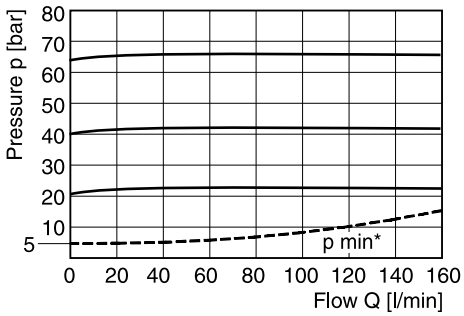

Max. 160 bar

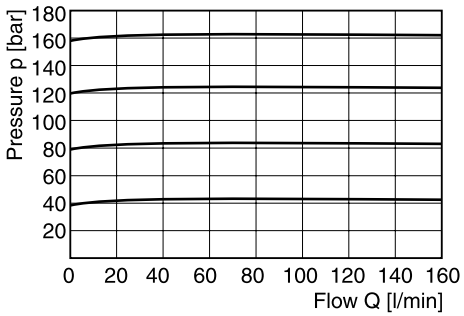

Max. 210 bar

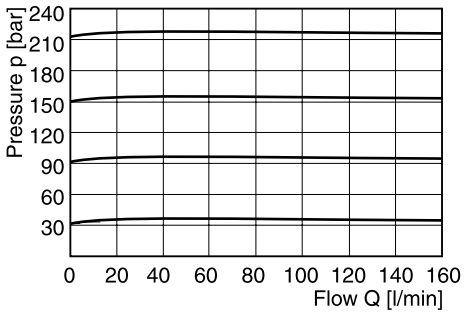

Max. 315 bar

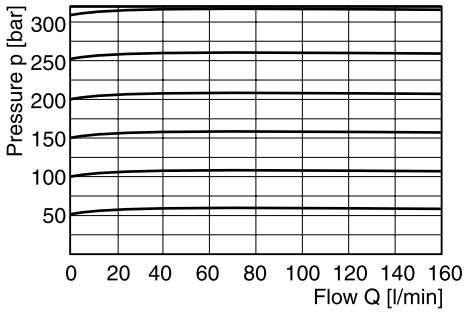

All characteristic curves measured with HLP46 at 50 °C.

* For all pressure stages.

NG06

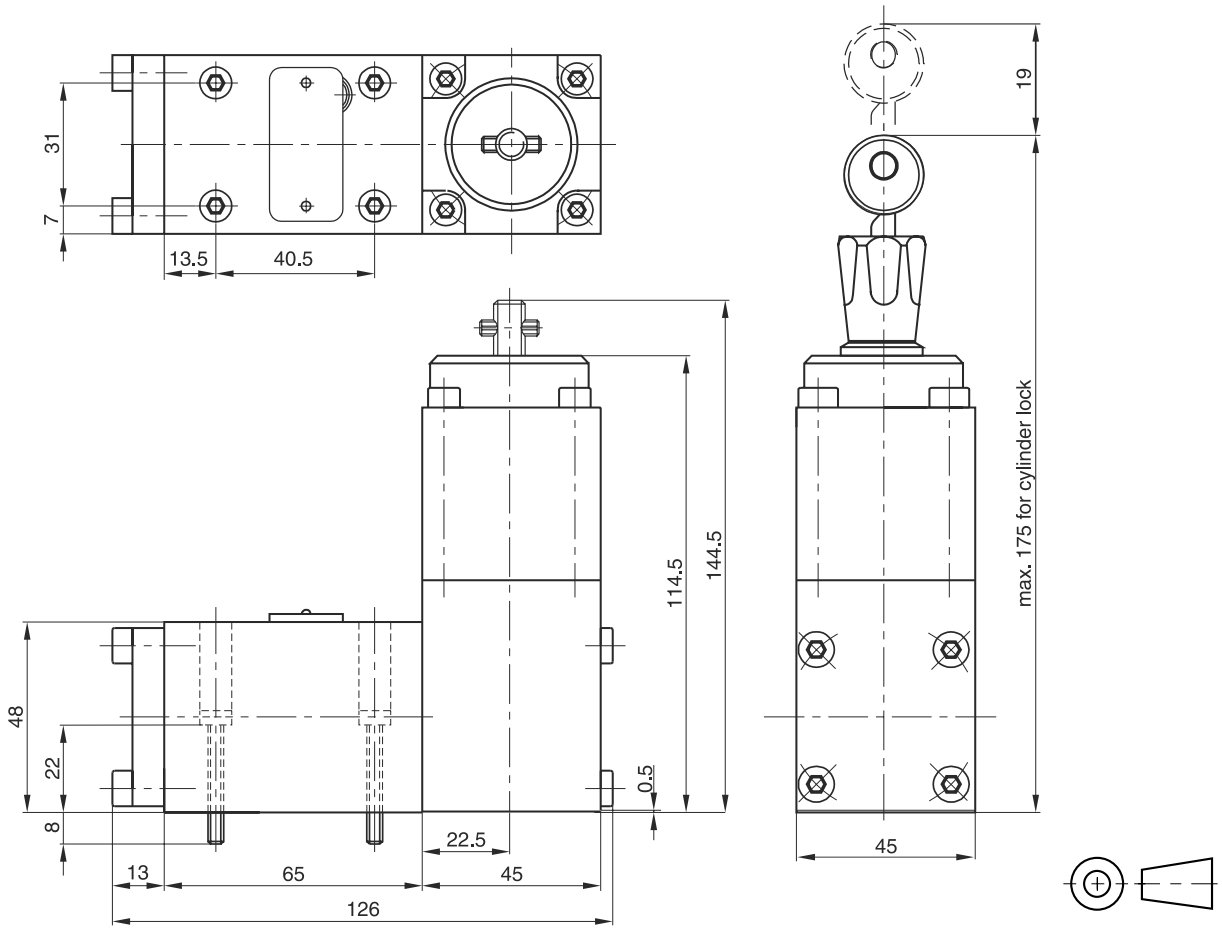

Surface finish	Bolt kit			Kit FPM
R_{max}6.3 0.01/100	BK375	4x M5x30 ISO 4762-12.9	7.6 Nm ±15 %	SK-VBY-A06V

Mounting pattern ISO 5781-03-04-0-00

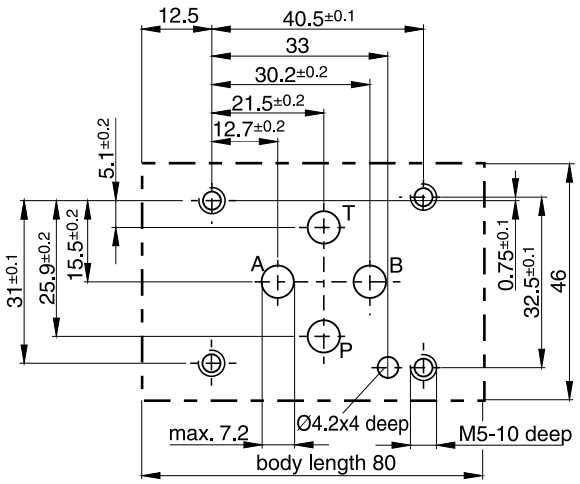

NG10

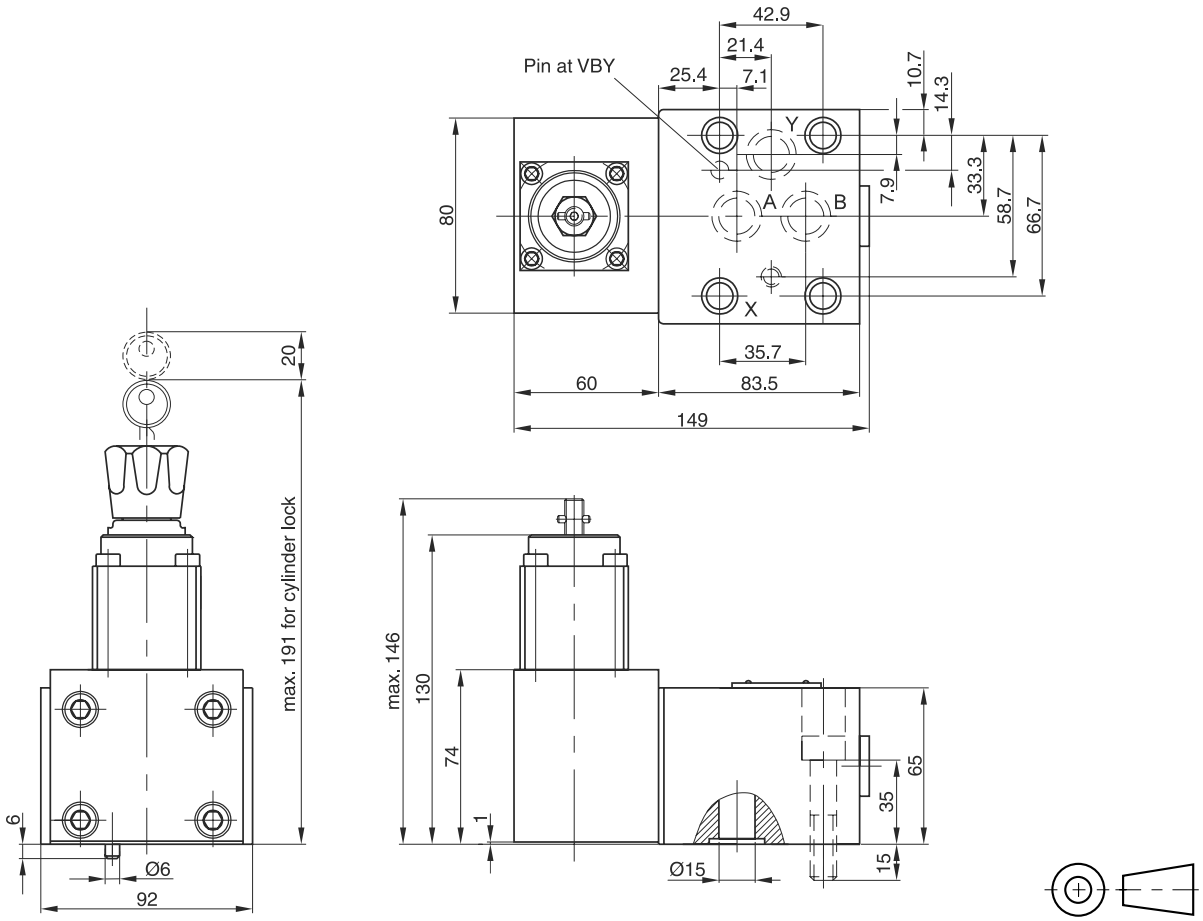

Surface finish	Bolt kit			Kit FPM
$\sqrt{R_{max}6.3}$ 0.01/100	BK389	4x M10x50 ISO 4762-12.9	63 Nm ±15 %	SK-VB/VM-A10V

Mounting pattern ISO 5781-06-07-0-00 [1)]

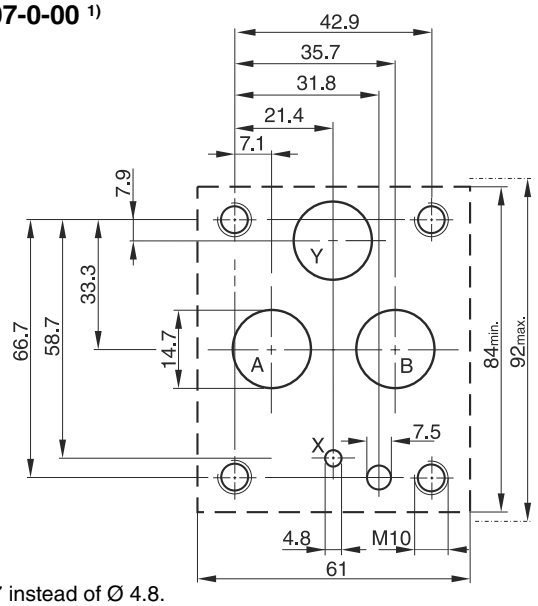

[1)] Deviating from ISO the Y port has Ø 14.7 instead of Ø 4.8.

The direct operated pressure relief valve series EVSA is a seated type valve for screw-in mounting. It is available in two sizes and three pressure stages.



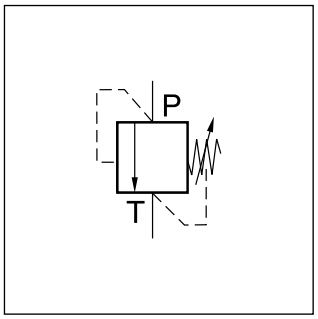

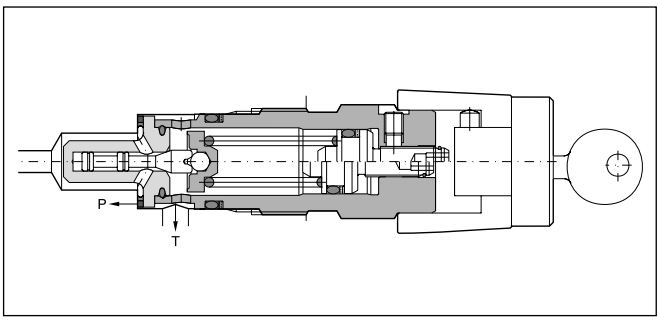

Function

When the pressure in port P exceeds the setting pressure the cone opens to port T and thus limits the pressure in port P to the adjusted level.

The integrated damping spool prevents pressure fluctuations in the transition region. The pressure is set by the adjusting screw, which is locked by the clamping screw. The setting can optionally be secured by a cylinder lock.

Features

- Seated type valve
- Screw-in mounting
- 3 pressure stages
- 2 adjustment modes:
  - screw with hexagon socket
  - cylinder lock

Note

The spring must be unloaded when the EVSA is screwed out of the manifold.

Ordering code

EVSA		A		1		
Pressure relief valve	Pressure stages	Adjustment screw with hex. socket	Nominal size / thread type	FPM Seals	Design series (not required for ordering)	Lock

Code	Pressure stages
064	**up to 64 bar**
160	**up to 160 bar**
315	**up to 315 bar**

Code	Lock
omit	**–**
Z	Cylinder lock

Code	Nominal size
06	**NG06, M28x1.5**
10	**NG10, M35x1.5**

Bold letters =
Short-term availability

Technical data

General			
Design		Direct operated relief valve, seated type	
Nominal size		**NG06**	**NG10**
Interface		Screw-in mounting	
Mounting position		unrestricted	
Ambient temperature	[°C]	-20...+60	
$MTTF_D$ value	[years]	150	
Weight	[kg]	0.3	0.45
Hydraulics			
Max. operating pressure	[bar]	Port P 315, Port T depressurized	
Pressure stages	[bar]	64, 160, 315	
Nominal flow	[l/min]	40 (NG06), 80 (NG10)	
Fluid		Hydraulic oil according to DIN 51524	
Fluid temperature	[°C]	-20…+70	
Viscosity permitted	[cSt] / [mm²/s]	20...400	
recommended	[cSt] / [mm²/s]	30...80	
Filtration		ISO 4406 (1999); 18/16/13	

4

Δp/Q performance curves

NG06 pressure stage 64 bar

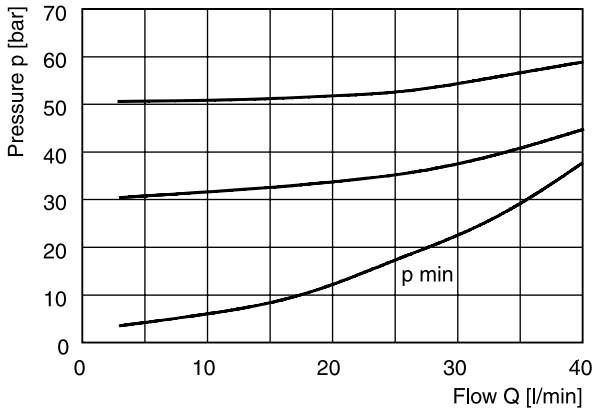

NG10 pressure stage 64 bar

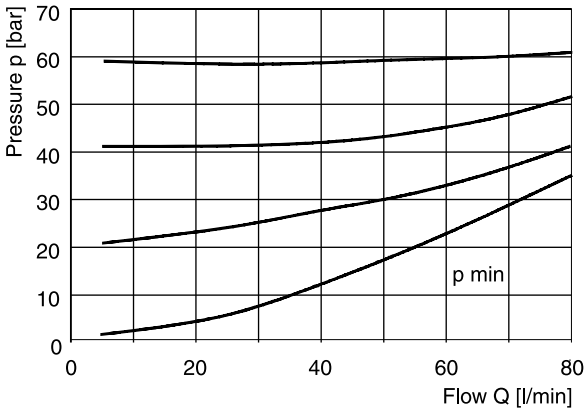

NG06 pressure stage 160 bar

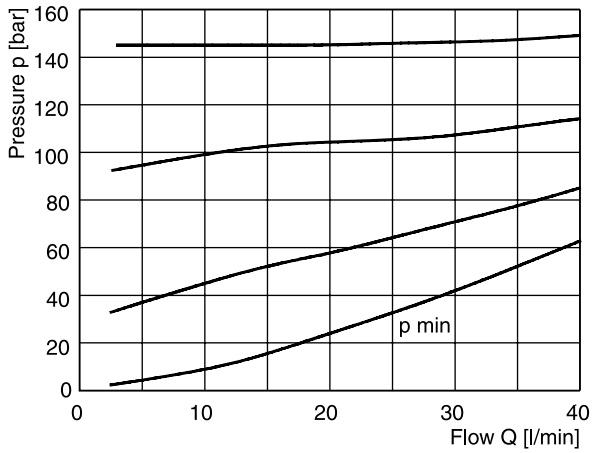

NG10 pressure stage 160 bar

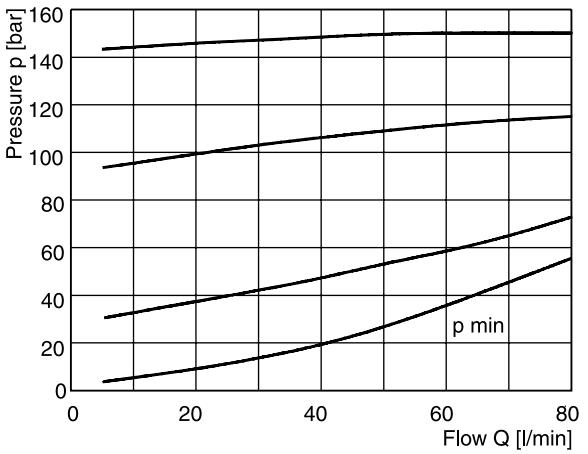

NG06 pressure stage 315 bar

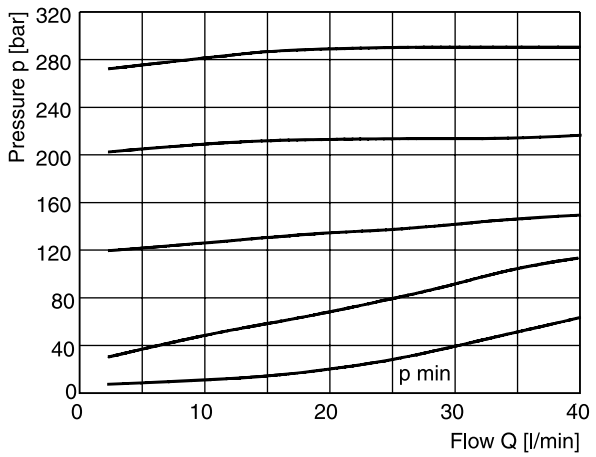

NG10 pressure stage 315 bar

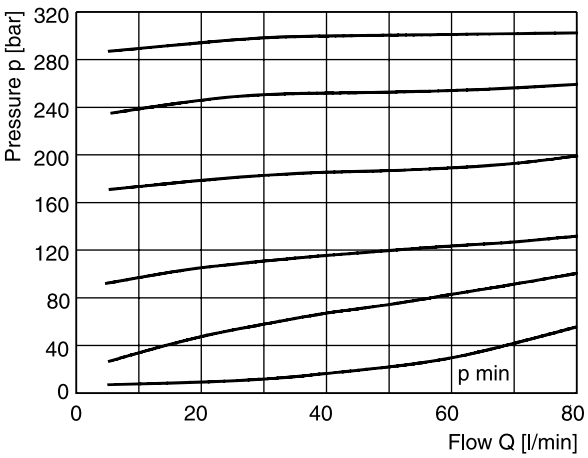

All characteristic curves measured with HLP46 at 50 °C.

NG06

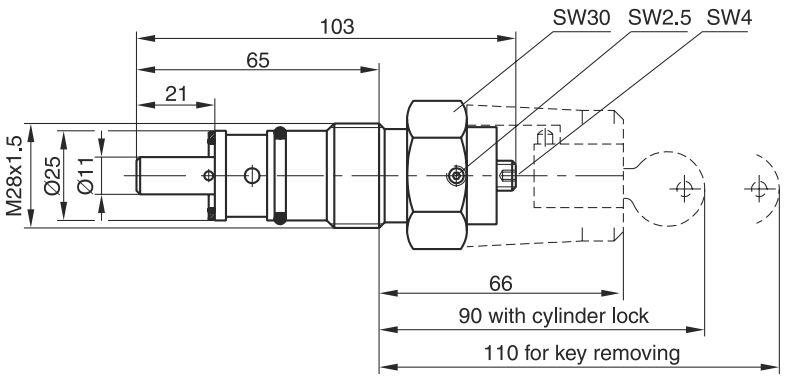

Kit
SK-EVSAA0613

NG10

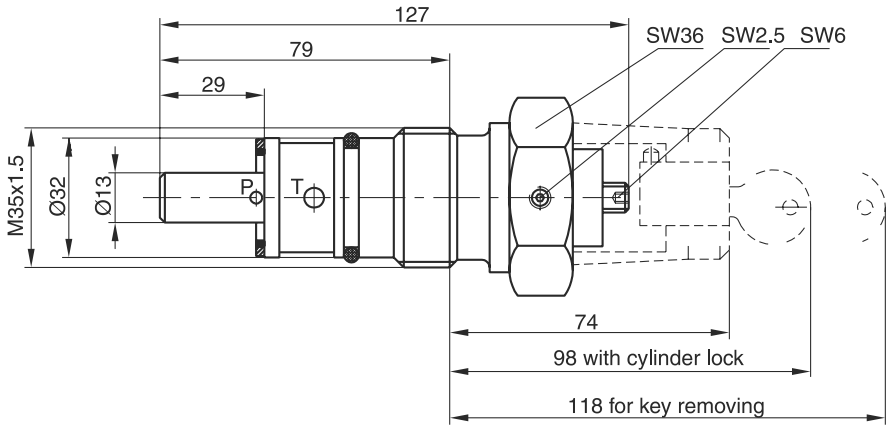

Kit
SK-EVSAA1013

Installation dimensions

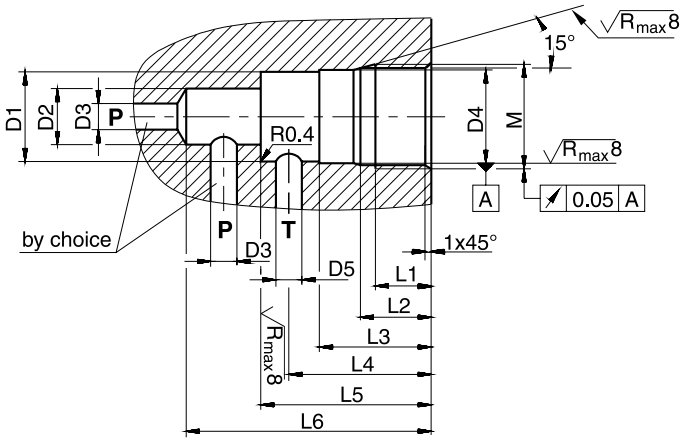

Tightening torque [Nm] ±5 %		
Pressure stages	**NG06**	**NG10**
064, 160	50	100
315	80	150

Size	M	D_1	D_2	D_3	D_4	D_5	L_1	L_2	L_3	L_4	L_5	L_6
NG06	M28 x 1.5	Ø24.8	Ø15	Ø6.8	$Ø25^{H9}$	Ø6.8	15	19	30	35	45	65
NG10	M35 x 1.5	Ø31.8	Ø18.5	Ø10	$Ø32^{H9}$	Ø10	18	23	35	41 - 46	52	80

Direct operated pressure relief valves series R1E02 are seated type valves typically used for remote control of pilot operated pressure valves or compensators of variable pumps. In applications where the reliability and simplicity of a hydraulic remote control are preferred to an electro-hydraulic system the R1E02 series is an ideal solution.



Front panel mounting



Subplate mounting

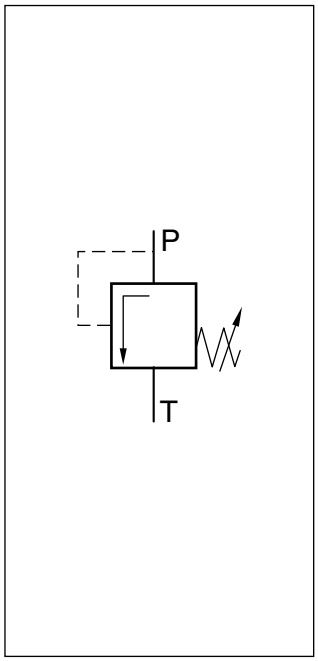

Features

- Seated type valve
- Body variants:
  - front panel mounting
  - subplate mounting
- 3 pressure stages
- 3 adjustment modes:
  - hand knob
  - acorn nut with lead seal
  - cylinder lock

4

R1E02, front panel mounting

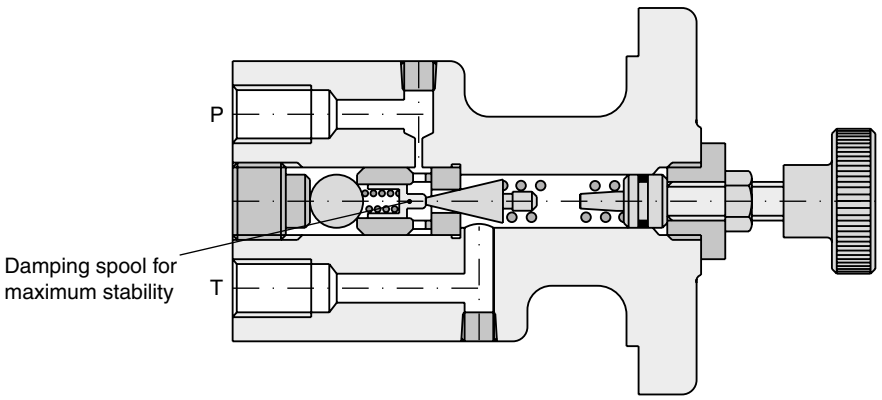

Typical application as remote pilot valve

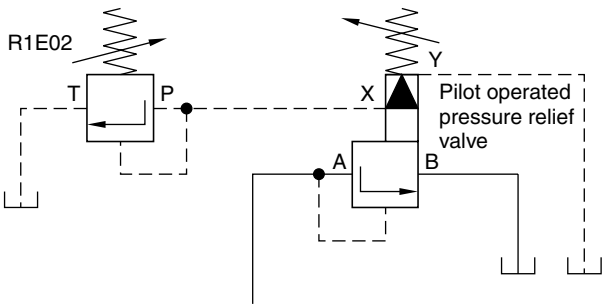

Ordering code

R1E02	–			2		A	1	
Pressure relief valve		Body	Pressure stages	Connections G1/4“	Adjust-ment	Design series	Seals NBR	Options

Code	Body
2	Front panel mounting
3	Subplate mounting

Code	Pressure stages
1	up to 105 bar
3	up to 210 bar
5	up to 350 bar

Code	Adjustment
1	Hand knob Ø 32 mm
3	Acorn nut with lead seal
4 [1)]	Cylinder lock

4

[1)] On bodies for subplate mounting use plate S16-64188 if necessary.

Technical data

General			
Design		Direct operated relief valve, seated type	
Nominal size		1/4”	
Body variants		Front panel mounting	Subplate mounting
Mounting position		unrestricted	
Ambient temperature	[°C]	-20...+60	
$MTTF_D$ value	[years]	150	
Weight	[kg]	2.1	1.0
Hydraulics			
Max. operating pressure	[bar]	Port P 350, Port T depressurized	
Pressure stages	[bar]	105, 210, 350	
Fluid temperature	[°C]	-25...+70	
Nominal flow	[l/min]	3.8	
Fluid		Hydraulic oil according to DIN 51524	
Minimum setting pressure	[bar]	7	
Viscosity permitted recommended	[cSt] / [mm²/s] [cSt] / [mm²/s]	20…400 30…80	
Filtration		ISO 4406 (1999); 18/16/13	

Typical system pressure in relation to flow

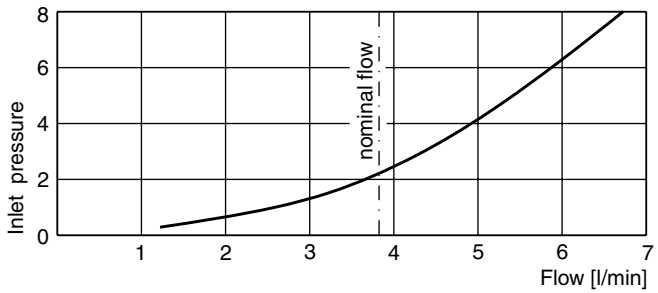

Measured with HLP46 at 50 °C.

4

Front panel mounting

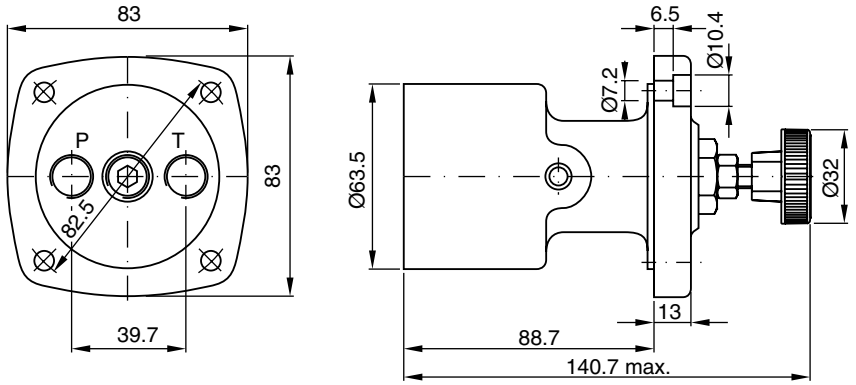

Ports P and T: G1/4”

Kit
S26-58466-0

Subplate mounting

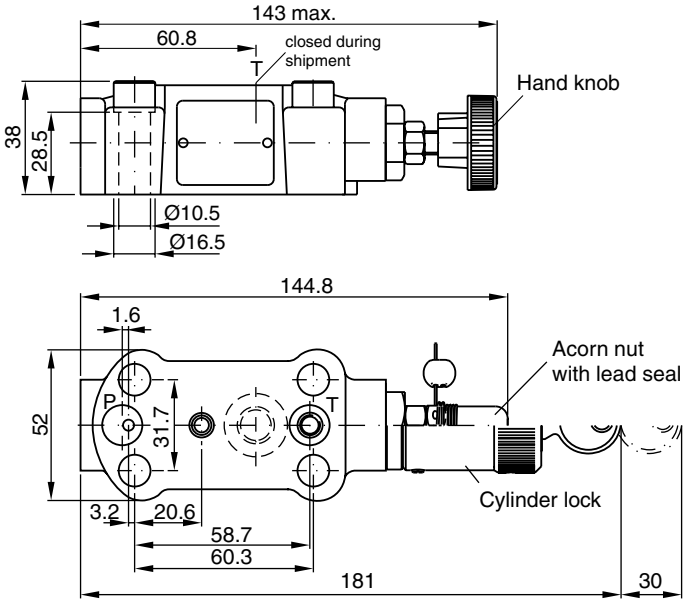

Kit
S16-91963-0

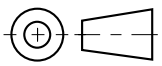

Pilot operated pressure relief valves series R4V (DIN 24340 Form D) and R6V (DIN 24340 Form E) consist of a manually adjusted pilot stage and a seated type main stage.

A vent function with a solenoid operated directional valve is available for circulation at minimum pressure.

Features

- Pilot operated with manual adjustment
- 2 interfaces
  - R4V subplate ISO 6264 (DIN 24340 Form D) with VV01 vent valve
  - R6V subplate ISO 6264 (DIN 24340 Form E) with CETOP 03 vent valve
- 3 pressure stages
- 3 adjustment modes:
  - hand knob
  - acorn nut with lead seal
  - cylinder lock
- Remote control via port X



R6V06



R6V06 with vent valve



R4V06 with vent valve

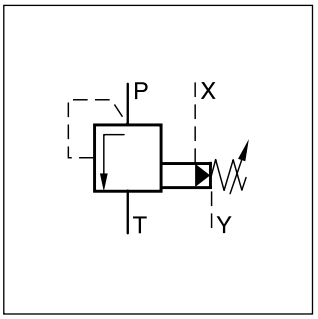

Function:

Series R4V/R6V

System pressure in port P is applied via the X gallery to the spring loaded cone in the pilot head. The pilot head controls the pressure in the Z area on top of the main cartridge which is additionally kept close by the main spring.

If the pilot pressure exceeds the setting pressure the pilot cone opens and thus limits the pilot pressure.

When the system pressure exceeds the pilot pressure plus the spring force, the main cartridge opens to port T and limits the pressure in port P to the adjusted level.

Series R4V/R6V with vent function

Additionally to the relief function, a solenoid operated vent valve connects the Z area to tank. This allows oil circulation from P to T at minimum pressure drop. The vent valve can either be a standard CETOP 03 valve (R6V) or a sandwich unit (R4V). For both types the vent position can be either at the energized or de-energized solenoid.

R6V06 with vent valve

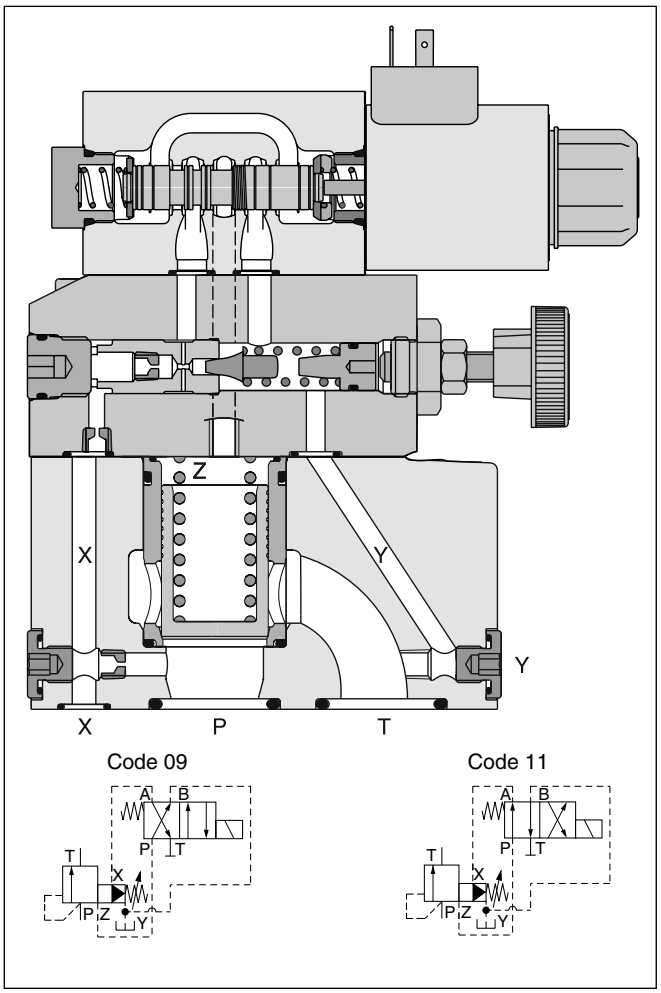

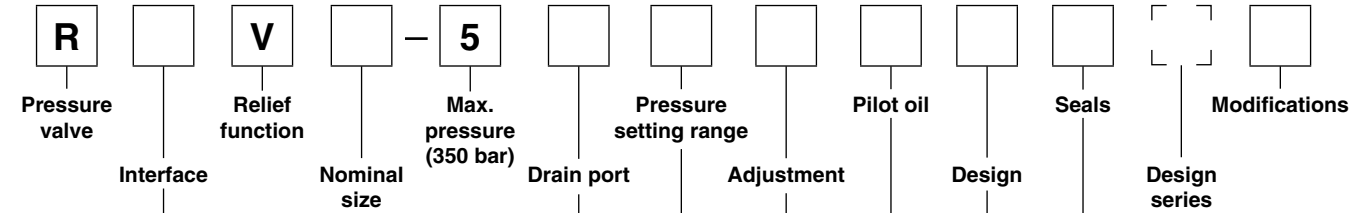

4

Code	Interface
4	Subplate mounting ISO 6264 (NG10 and 25 / NG32)
6	Subplate mounting ISO 6264

Code	Nominal size
03	NG10
06	NG25
10	NG32

Code	Interface	Drain port
3	R4V	Y port in mounting pattern
9	R6V	Y-port = G 1/8“

Code	Pressure stages
1	up to 105 bar
3	up to 210 bar
5	up to 350 bar

Code	Seals
1	NBR
5	FPM

Code	Design
A	R4V
B	R6V

Pilot oil	
Code	Drain line
0	internal
1 [1)]	external from sub-plate
2 [2)]	external from valve body (Y-port)

Code	Adjustment
1	Hand knob 32 mm dia. (standard)
3	Acorn nut with lead seal
4	Cylinder lock

[1)] R4V only.
[2)] R6V only.

R		V		–	5											
Pressure valve	**Interface**	**Relief function**	**Nominal size**		**Max.pressure (350 bar)**	**Drain port**	**Pressure setting range**	**Adjustment**	**Pilot oil**	**Vent valve function**	**Solenoid voltage**	**Design**	**Seals**	**Design series** (not required for ordering)	**Modifications**

Code	Interface	
4	Subplate mounting ISO 6264	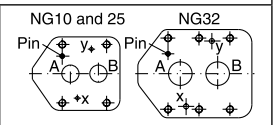
6		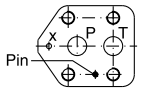

Code	Nominal size
03	NG10
06	NG25
10	NG32

Code	Interface	Drain port
3	R4V	Y port in mounting pattern
9	R6V	Y-port = G 1/8“

Code	Pressure stages
1	up to 105 bar
3	up to 210 bar
5	up to 350 bar

Code	Adjustment
1	Hand knob (Standard)
3	Acorn nut with lead seal
4	Turning knob with key lock

Code	Modification
031 [1)4)]	Vent function with slow unloading
VFM [2)4)]	Vent function with slow unloading

Code	Seals
1	NBR
5	FPM

Code	Design
A	R4V
B	R6V

Code	Voltage
G0R	12 V =
G0Q	24 V =
GAR [3)]	98 V =
GAG [3)]	205 V =
W30	110 V / 50 Hz 120 V / 60 Hz
W31	230 V / 50 Hz 240 V / 60 Hz

Code	Vent valve
09	Solenoid not activ. unpress. circulation
11	Solenoid activated unpress. circulation

Pilot oil	
Code	Drain line
0	internal
1 [1)]	external from subplate
2 [2)]	external from valve body (Y-port)

[1)] R4V only.
[2)] R6V only.
[3)] To be used in combination with rectifier plugs at 120 VAC / 230 VAC power supply.
[4)] Vent valve function code 09 only.

R4V/R6V

General					
Nominal size		**NG10**	**NG25**	**NG32**	
Interface		Subplate mounting acc. ISO 6264 (DIN 24340)			
Mounting position		Unrestricted, horizontal mounting preferred			
Ambient temperature	[°C]	-20...+60			
$MTTF_D$ value	[years]	75			
Weight Series R6V	[kg]	4.5	5.8	7.8	
Series R4V	[kg]	2.7	4.5	6.0	
Hydraulic					
Max. operating pressure	[bar]	Ports P (or A) and X up to 350, Port T (or B) and Y 30			
Pressure stages	[bar]	105, 210, 350			
Nominal flow	[l/min]	250	500	650	
Fluid		Hydraulic oil according to DIN 51524			
Viscosity, permitted	[cSt] / [mm²/s]	20 ... 400			
recommended	[cSt] / [mm²/s]	30 ... 80			
Fluid temperature	[°C]	-20...+70 (NBR: -25...+70)			
Filtration		ISO 4406; 18/16/13			

R4V/R6V with vent function

General							
Nominal size		**NG10**		**NG25**		**NG32**	
Interface		Subplate mounting acc. ISO 6264 (DIN 24340)					
Mounting position		Unrestricted, horizontal mounting preferred					
Ambient temperature	[°C]	-20...+60					
$MTTF_D$ value	[years]	75					
Weight Series R6V	[kg]	5.9		7.2		9.2	
Series R4V	[kg]	4.4		6.2		7.7	
Hydraulic							
Max. operating pressure	[bar]	Ports P (or A) and X up to 350, port T (or B) and Y 30					
Pressure stages	[bar]	105, 210, 350					
Nominal flow	[l/min]	250		500		650	
Fluid		Hydraulic oil according to DIN 51524					
Viscosity, permitted	[cSt] / [mm²/s]	20 ... 400					
recommended	[cSt] / [mm²/s]	30 ... 80					
Fluid temperature	[°C]	-20...+70 (NBR: -25...+70)					
Filtration		ISO 4406; 18/16/13					
Electrical							
Duty ratio	[%]	100 ED; CAUTION: coil temperature up to 150 °C possible					
Protection class		IP65 in accordance with EN 60529 (with correctly mounted plug-in connector)					
Code		G0R	G0Q	GAR	GAG	W30	W31
Supply voltage	[V]	12 V =	24 V =	98 V =	205 V =	110 V/50 Hz 120 V/60 Hz	230 V/50 Hz 240 V/60 Hz
Tolerance supply voltage	[%]	±10	±10	±10	±10	±5	±5
Current consumption hold	[A]	2.72	1.29	0.33	0.13	0.6 / 0.55	0.3 / 0.27
in rush	[A]	2.72	1.29	0.33	0.13	2.5 / 2.4	1.25 / 1.2
Power consumption hold	[W]	32.7	31	31.9	28.2	70 / 70 VA	70 / 70 VA
in rush	[W]	32.7	31	31.9	28.2	280 / 290 VA	280 / 290 VA
Solenoid connection		Connector as per EN175301-803, solenoid identification as per ISO 9461					
Wiring min.	[mm²]	3 x 1.5 recommended					
Wiring length max.	[m]	50 recommended					

p/Q performance curves [1)]

NG10

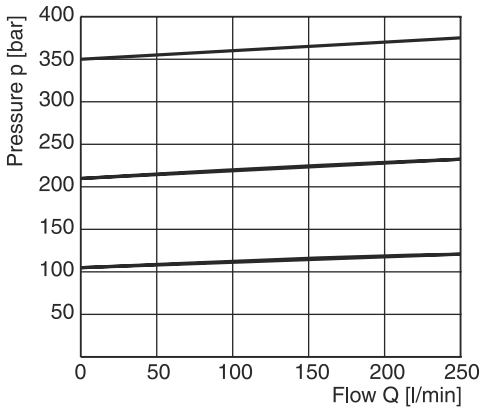

NG25

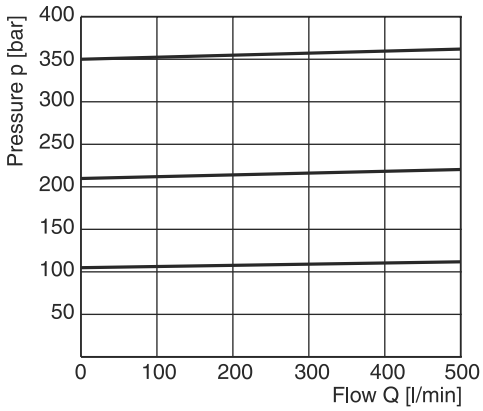

NG32

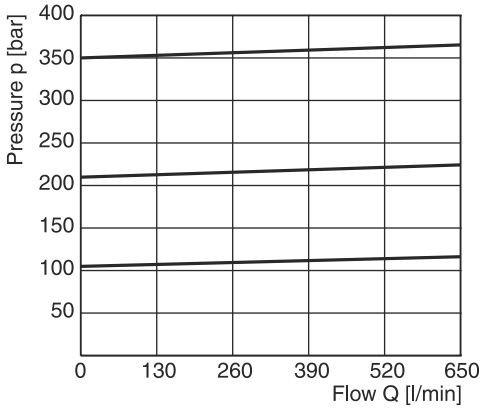

Minimum pressure curve

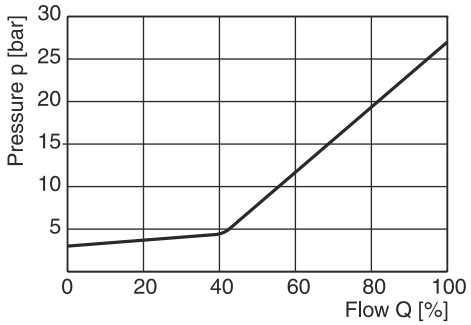

All characteristic curves measured with HLP46 at 50 °C.

[1)] The performance curves are measured with external drain.
For internal drain the tank pressure has to be added to curve.

R6V

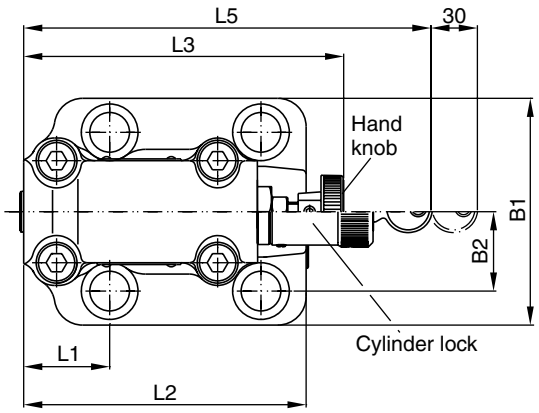

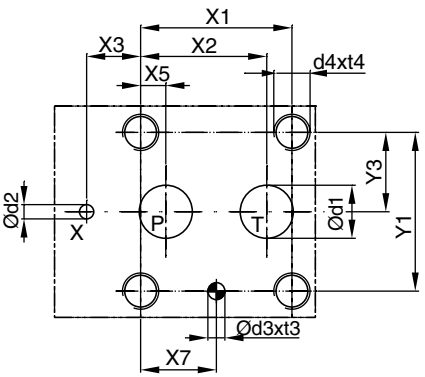

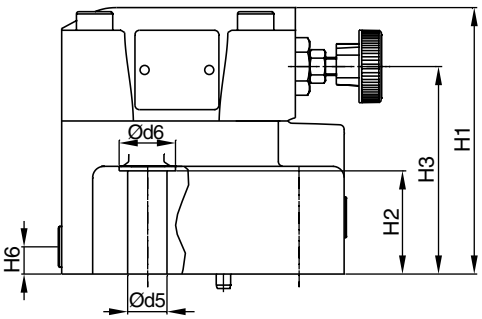

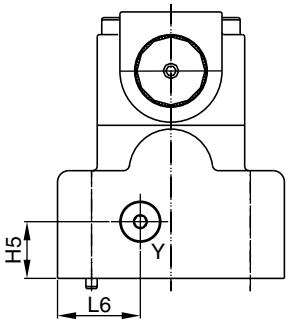

Y: external drain port G 1/8“

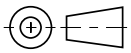

NG	ISO-code	x1	x2	x3	x4	x5	x6	x7	y1	y2	y3	y4	y5	y6
10	6264-06-09-*-97	53.8	47.5	0	–	22.1	–	22.1	53.8	–	26.9	–	–	–
25	6264-08-13-*-97	66.7	55.6	23.8	–	11.1	–	33.4	70	–	35	–	–	–
32	6264-10-17-*-97	88.9	76.2	31.8	–	12.7	–	44.5	82.6	–	41.3	–	–	–

Tolerance at X and Y pin holes and screw holes ±0.1, at port holes ±0.2.

NG	ISO-code	B1	B2	H1	H2	H3	H4	H5	H6	L1	L2	L3	L4	L5	L6
10	6264-06-09-*-97	80	26.9	114	27	88		20.5	25	52	117	141		180	29.5
25	6264-08-13-*-97	100	35	117.5	46.5	91.5	–	25	12	37.9	124.5	141	–	180	36.5
32	6264-10-17-*-97	120	41.3	124.5	51.3	98.5		26.5	13.5	44.3	153	141		180	46.5

NG	ISO-code	d1max	d2max	d3	t3	d4	t4	d5	d6	Subplate [1]
10	6264-06-09-*-97	14.7	4.8	7.5	10	M12	20	13.5	20	SPP 3R6B 910
25	6264-08-13-*-97	23.4	6.3	7.5	10	M16	27	17.5	25	SPP 6R10B 910
32	6264-10-17-*-97	32	6.3	7.5	10	M18	28	20	30	SPP 10R12B 910

NG	Kit			Kit		Surface finish
				NBR	FPM	
10	BK494	4x M12x45 ISO 4762-12.9	108 Nm ±15 %	S26-98589-0	S26-98589-5	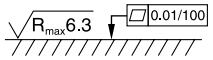
25	BK366	4x M16x70 ISO 4762-12.9	264 Nm ±15 %	S26-96396-0	S26-96396-5	
32	BK507	4x M18x75 ISO 4762-12.9	398 Nm ±15 %	S26-96392-0	S26-96392-5	

[1] Details see chapter 12, series SPP.

R6V with vent function

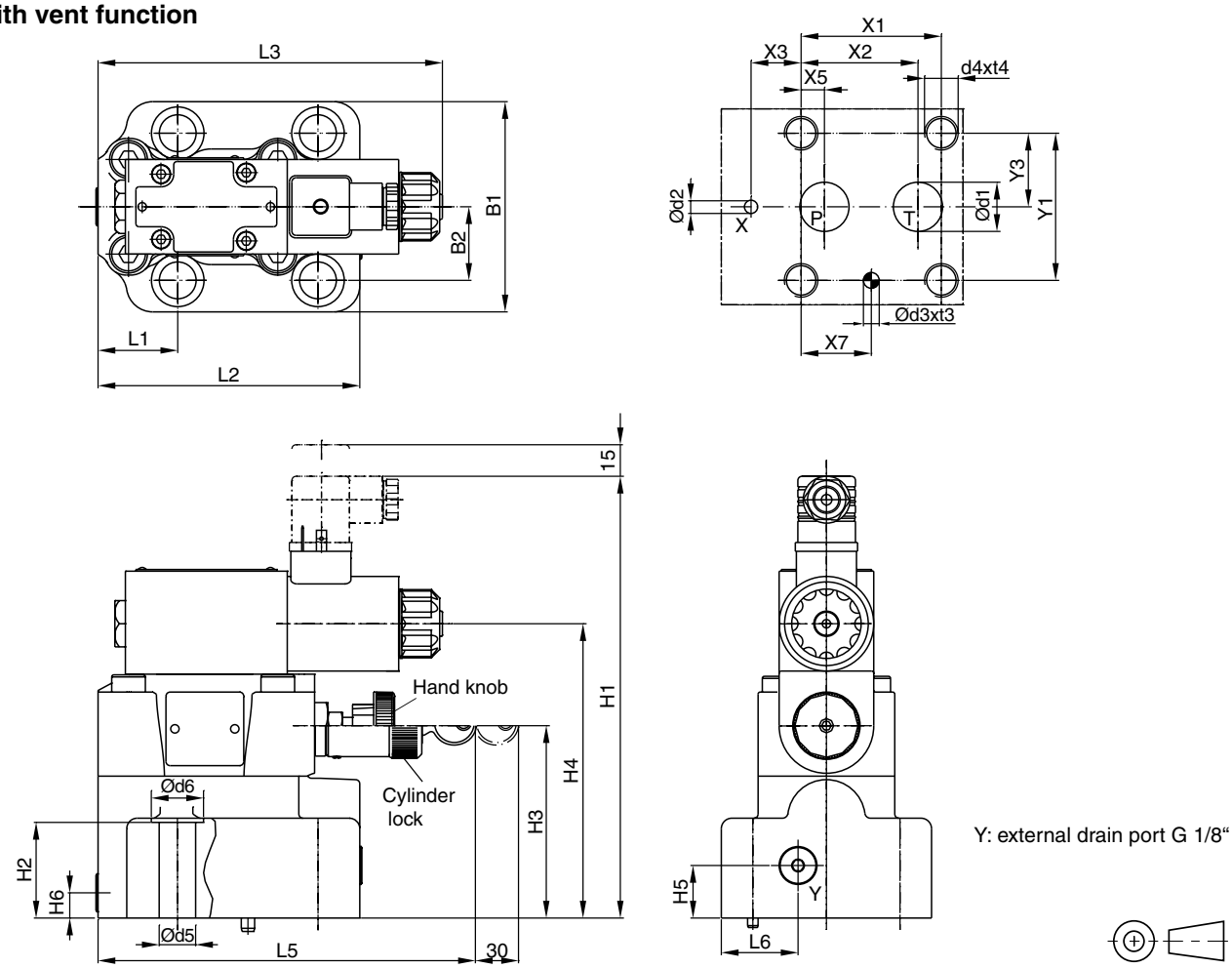

Y: external drain port G 1/8“

NG	ISO-code	x1	x2	x3	x4	x5	x6	x7	y1	y2	y3	y4	y5	y6
10	6264-06-09-*-97	53.8	47.5	0	–	22.1	–	22.1	53.8	–	26.9	–	–	–
25	6264-08-13-*-97	66.7	55.6	23.8	–	11.1	–	33.4	70	–	35	–	–	–
32	6264-10-17-*-97	88.9	76.2	31.8	–	12.7	–	44.5	82.6	–	41.3	–	–	–

Tolerance at X and Y pin holes and screw holes ±0.1, at port holes ±0.2.

NG	ISO-code	B1	B2	H1	H2	H3	H4	H5	H6	L1	L2	L3	L4	L5	L6
10	6264-06-09-*-97	80	26.9	203.4	27	88	136.3	25	12	52	117	163.8		180	36.5
25	6264-08-13-*-97	100	35	206.9	46.5	91.5	139.8	25	12	37.9	124.5	163.8	–	180	36.5
32	6264-10-17-*-97	120	41.3	213.9	51.3	98.5	146.8	25	12	44.3	153	163.8		180	36.5

NG	ISO-code	d1max	d2max	d3	t3	d4	t4	d5	d6	Subplate [1]
10	6264-06-09-*-97	14.7	4.8	7.5	10	M12	20	13.5	20	SPP 3R6B 910
25	6264-08-13-*-97	23.4	6.3	7.5	10	M16	27	17.5	25	SPP 6R10B 910
32	6264-10-17-*-97	32	6.3	7.5	10	M18	28	20	30	SPP 10R12B 910

NG	Kit			Kit		Surface finish
				NBR	FPM	
10	BK494	4x M12x45 ISO 4762-12.9	108 Nm ±15 %	S26-98589-0	S26-98589-5	R_{max}6.3 ⏥ 0.01/100
25	BK366	4x M16x70 ISO 4762-12.9	264 Nm ±15 %	S26-96396-0	S26-96396-5	
32	BK507	4x M18x75 ISO 4762-12.9	398 Nm ±15 %	S26-96392-0	S26-96392-5	

[1] Details see chapter 12, series SPP.

R4V

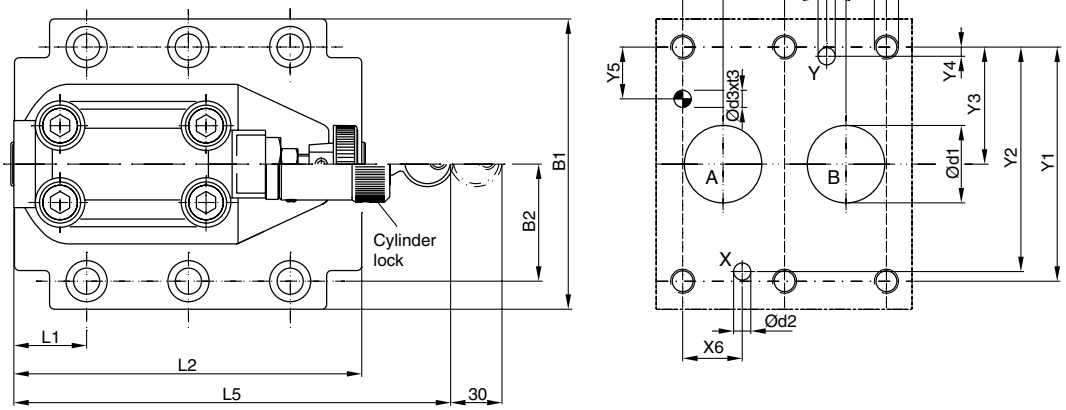

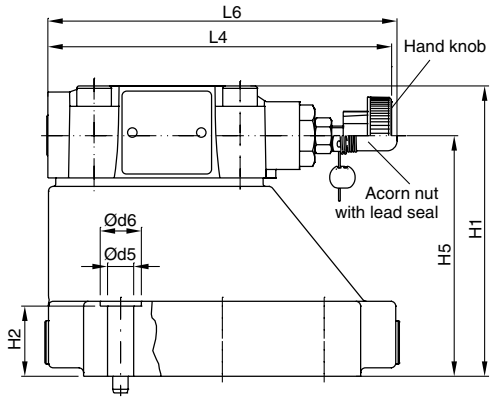

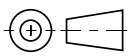

NG	ISO-code	x1	x2	x3	x4	x5	x6	x7	y1	y2	y3	y4	y5	y6
10	6264-06-07-*-97	42.9	35.8	21.5	–	7.2	21.5	0	66.7	58.8	33.4	7.9	14.3	–
25	6264-08-11-*-97	60.3	49.2	39.7	–	11.1	20.6	0	79.4	73	39.7	6.4	15.9	–
32	6264-10-15-*-97	84.2	67.5	59.5	42.1	16.7	24.6	0	96.8	92.8	48.4	3.8	21.4	–

Tolerance at X and Y pin holes and screw holes ±0.1, at port holes ±0.2.

NG	ISO-code	B1	B2	H1	H2	H3	H4	H5	H6	L1	L2	L3	L4	L5	L6
10	6264-06-07-*-97	87.3	33.35	83	21	–	–	62.5	–	25	90.8	–	143	181	144.8
25	6264-08-11-*-97	105	39.7	107.5	29	–	–	87	–	30.9	123	–	143	181	144.8
32	6264-10-15-*-97	120	48.4	120	30	–	–	99.5	–	29.8	143.5	–	143	181	144.8

NG	ISO-code	d1max	d2max	d3	t3	d4	t4	d5	d6	Subplate [1]
10	6264-06-07-*-97	15	7	7.1	8	M10	16	10.8	17	SPP 3M6B 910
25	6264-08-11-*-97	23.4	7.1	7.1	8	M10	18	10.8	17	SPP 6M8B 910
32	6264-10-15-*-97	32	7.1	7.1	8	M10	20	10.8	17	SPP 10M12B 910

NG	Kit			Kit		Surface finish
				NBR	FPM	
10	BK505	4x M10x35 ISO 4762-12.9	63 Nm ±15 %	S26-58507-0	S26-58507-5	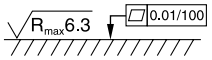
25	BK485	4x M10x45 ISO 4762-12.9	63 Nm ±15 %	S26-58475-0	S26-58475-5	
32	BK506	6x M10x45 ISO 4762-12.9	63 Nm ±15 %	S26-58508-0	S26-58508-5	

[1] Details see chapter 12, series SPP.

R4V with vent function

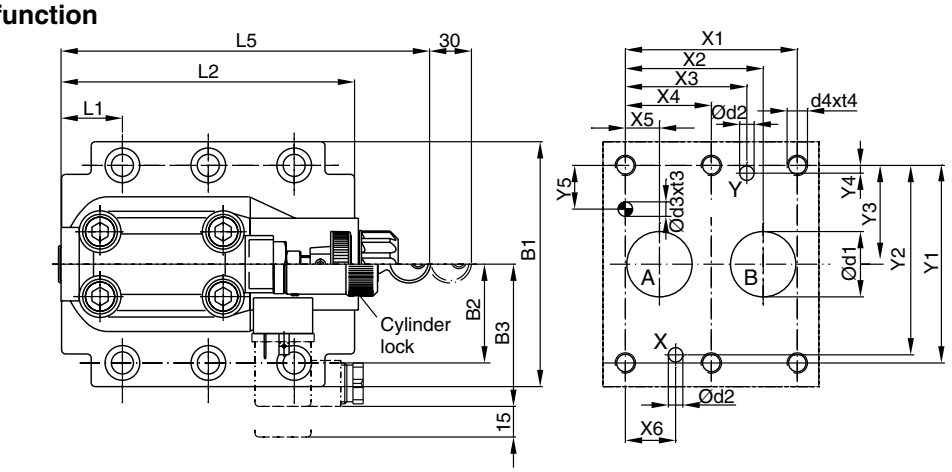

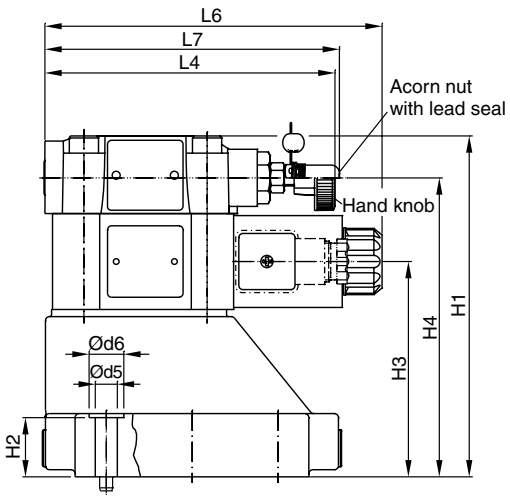

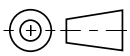

NG	ISO-code	x1	x2	x3	x4	x5	x6	x7	y1	y2	y3	y4	y5	y6
10	6264-06-07-*-97	42.9	35.8	21.5	–	7.2	21.5	0	66.7	58.8	33.4	7.9	14.3	–
25	6264-08-11-*-97	60.3	49.2	39.7	–	11.1	20.6	0	79.4	73	39.7	6.4	15.9	–
32	6264-10-15-*-97	84.2	67.5	59.5	42.1	16.7	24.6	0	96.8	92.8	48.4	3.8	21.4	–

Tolerance at X and Y pin holes and screw holes ±0.1, at port holes ±0.2.

NG	ISO-code	B1	B2	B3	H1	H2	H3	H4	H6	L1	L2	L3	L4	L5	L6	L7
10	6264-06-07-*-97	87.3	33.35	70	130	21	68.5	109.5	–	25	90.8	–	143	181	165.6	144.8
25	6264-08-11-*-97	105	39.7	70	154.5	29	93	134	–	30.9	123	–	143	181	165.6	144.8
32	6264-10-15-*-97	120	48.4	70	167	30	105.5	146.5	–	29.8	143.5	–	143	181	165.6	144.8

NG	ISO-code	d1max	d2max	d3	t3	d4	t4	d5	d6	Subplate [1]
10	6264-06-07-*-97	15	7	7.1	8	M10	16	10.8	17	SPP 3M6B 910
25	6264-08-11-*-97	23.4	7.1	7.1	8	M10	18	10.8	17	SPP 6M8B 910
32	6264-10-15-*-97	32	7.1	7.1	8	M10	20	10.8	17	SPP 10M12B 910

NG	Kit			Kit		Surface finish
				NBR	FPM	
10	BK505	4x M10x35 ISO 4762-12.9	63 Nm ±15 %	S26-58507-0 [2]	S26-58507-5 [2]	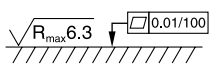
25	BK485	4x M10x45 ISO 4762-12.9	63 Nm ±15 %	S26-58475-0 [2]	S26-58475-5 [2]	
32	BK506	6x M10x45 ISO 4762-12.9	63 Nm ±15 %	S26-58508-0 [2]	S26-58508-5 [2]	
VV01, AC solenoid				S26-35237-0	S26-35237-5	
VV01, DC solenoid				S56-40609-0	S56-40609-5	

[1] Details see chapter 12, series SPP.
[2] Please combine seal kit of one size with seal kit of VV01 solenoid for complete seal kit.

Pilot operated pressure relief valves series R4V (TÜV) (DIN 24340 Form D) and R6V (TÜV) (DIN 24340 Form E) include a certification according to directive 2014/68/EU for the usage for safety-related applications.

The valve is set and sealed by the German technical inspection association TÜV. The valve delivery includes the TÜV certificate of conformity.

For series R6V a vent function with a solenoid operated directional valve is available for circulation at minimum pressure.

Features

- TÜV certificate
- Pilot operated with manual adjustment
- 2 interfaces:
  - R4V subplate ISO 6264 (DIN 24340 Form D)
  - R6V subplate ISO 6264 (DIN 24340 Form E) with CETOP 03 vent valve
- Adjustment leaded (code W)
- Adjustment leaded to maximum pressure, lower pressure possible (code V)



R6V06



R6V06 with vent valve



R4V06



Name plate data

Example R4V06

415 mm² :	minimum opening width
L220 l/min :	max. flow
70 bar :	set pressure (compare p/Q curves)
7,3 mm :	cartridge stroke
10 % :	permitted pressure increase of the flow range

R4V06

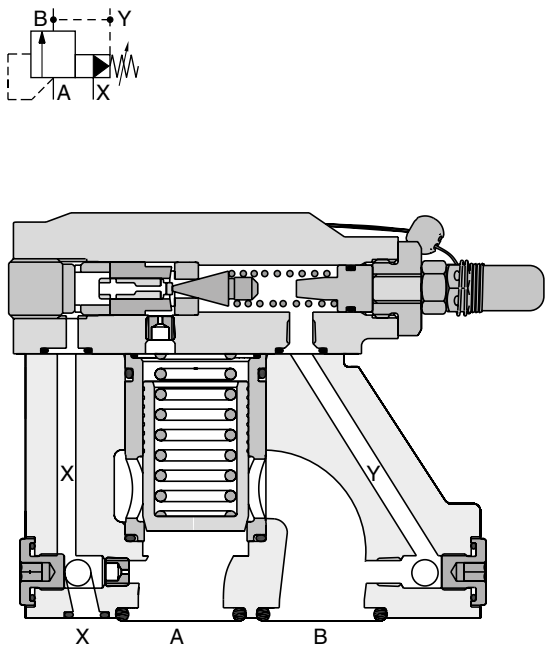

R6V06 with vent valve

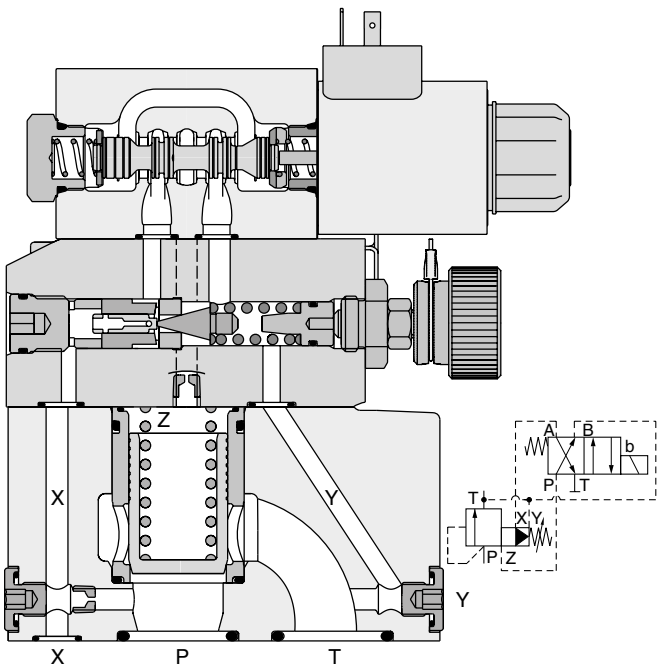

R4V / R6V

R		V		-	5		5		0			
Pressure valve	Interface	Relief function	Nominal size		Max. pressure (350 bar)	Body	Pressure setting range 350 bar max.	Adjustment leaded (TÜV)	Pilot oil internal	Design series	Seals	Pressure stage

Code	Interface	
4	Subplate mounting ISO 6264	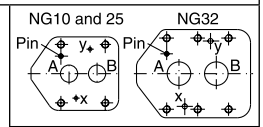
6		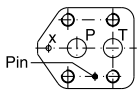

Code	Pressure stage [2]
P10	100 bar
P20	200 bar
P30	300 bar
P35	350 bar

Code	Seals
1	NBR
5	FPM

Code	Nominal size
03	NG10 [1]
06	NG25
10	NG32

Code	Design
A	R4V, R6V with adjustment code W
B	R6V with adjustment code V

Code	Body
3	R4V
9	R6V

Code	Adjustment
V	Hand knob leaded (lower pressure adjustment possible)
W	Acorn nut leaded

R6V with vent valve

R	6	V		-	5	9	5	V	0	09		B		
Pressure valve	Interface	Relief function	Nominal size		Max. pressure (350 bar)	Body Y-port = G 1/8“	Pressure setting range 350 bar max.	Adjustment leaded (TÜV) Hand knob leaded (lower pressure adjustment possible)	Pilot oil internal	Vent valve function solenoid not active, unpressurized circulation	Solenoid voltage	Design series	Seals	Pressure stage

Code	Interface	
6	Subplate mounting ISO 6264	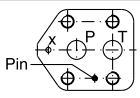

Code	Pressure stage [2]
P10	100 bar
P20	200 bar
P30	300 bar
P35	350 bar

Code	Nominal size
06	NG25
10	NG32

Code	Seals
1	NBR
5	FPM

Code	Voltage
G0R	12 V =
G0Q	24 V =

[1] Not for R6V.
[2] Further pressure stages on request (in 10 bar steps).

R4V / R6V

General					
Nominal size			**NG10**	**NG25**	**NG32**
Interface			Subplate mounting acc. ISO 6264		
Mounting position			Unrestricted, horizontal mounting preferred		
Ambient temperature		[°C]	-20...+60		
$MTTF_D$ value		[years]	75		
Weight	Series R6V	[kg]	—	5.8	7.8
	Series R4V	[kg]	2.7	4.5	6.0
Hydraulic					
Max. operating pressure		[bar]	Ports P (or A) up to 350, Port T (or B) and Y 30		
Pressure stages		[bar]	350 (pressure setting see ordering code)		
Max. flow	R6V	[l/min]	—	500	500
	R4V	[l/min]	110	450	500
Fluid			Hydraulic oil according to DIN 51524		
Fluid temperature		[°C]	-10...+70		
Viscosity, permitted		[cSt] / [mm²/s]	20 ... 400		
recommended		[cSt] / [mm²/s]	30 ... 80		
Filtration			ISO 4406; 18/16/13		

R6V with vent function

General				
Nominal size			**NG25**	**NG32**
Interface			Subplate mounting acc. ISO 6264	
Mounting position			Unrestricted, horizontal mounting preferred	
Ambient temperature		[°C]	-20...+60	
$MTTF_D$ value		[years]	75	
Weight		[kg]	7.2	9.2
Hydraulic				
Max. operating pressure		[bar]	Ports P up to 350, port T and Y 30	
Pressure stages		[bar]	350 (pressure setting see ordering code)	
Max. flow		[l/min]	500	
Fluid			Hydraulic oil according to DIN 51524	
Viscosity, permitted		[cSt] / [mm²/s]	20 ... 400	
recommended		[cSt] / [mm²/s]	30 ... 80	
Fluid temperature		[°C]	-10 ... +70	
Filtration			ISO 4406; 18/16/13	
Electrical				
Duty ratio		[%]	100 ED; CAUTION: coil temperature up to 150 °C possible	
Protection class			IP65 in accordance with EN 60529 (with correctly mounted plug-in connector)	
	Code		G0R	G0Q
Supply voltage		[V]	12 V =	24 V =
Tolerance supply voltage		[%]	±10	±10
Power consumption	hold	[W]	32.7	31
	in rush	[W]	32.7	31
Solenoid connection			Connector as per EN 175301-803	
Wiring min.		[mm²]	3 x 1.5 recommended	
Wiring length max.		[m]	50 recommended	

R4V/ R6V minimum pressure curve [1)]

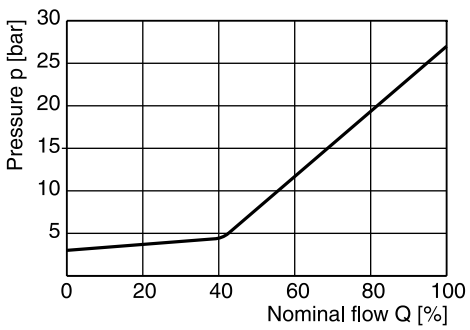

All characteristic curves measured with HLP46 at 50 °C.

1) The performance curves are measured with external drain.
For internal drain the tank pressure has to be added to curve.

p/Q performance curves [1)]

R4V03

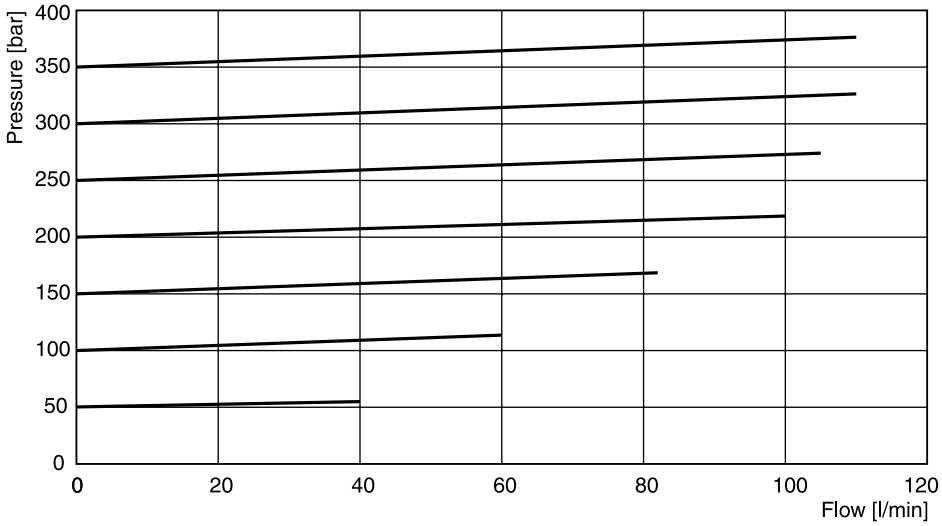

R4V03 nameplate data

Pressure stage	Q_{max}	min. opening width	Cartridge stroke	Permitted pressure increase
50 - 70 bar	40 l/min	154 mm²	4.4 mm	10 %
80 - 120 bar	60 l/min	154 mm²	4.4 mm	10 %
130 - 170 bar	82 l/min	154 mm²	4.4 mm	10 %
180 - 200 bar	100 l/min	154 mm²	4.4 mm	10 %
210 - 250 bar	105 l/min	154 mm²	4.4 mm	10 %
260 - 300 bar	110 l/min	154 mm²	4.4 mm	10 %
310 - 350 bar	110 l/min	154 mm²	4.4 mm	10 %

R4V06

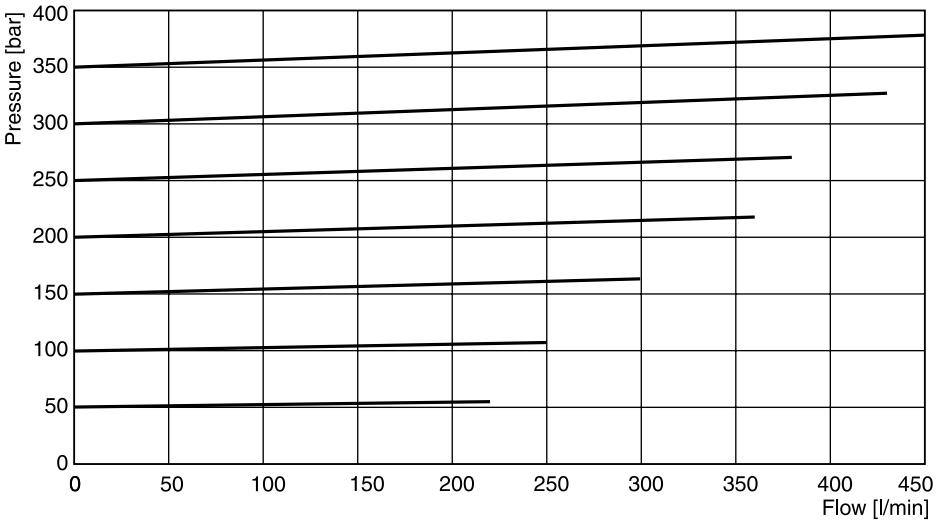

R4V06 nameplate data

Pressure stage	Q_{max}	min. opening width	Cartridge stroke	Permitted pressure increase
50 - 70 bar	220 l/min	415 mm²	7.3 mm	10 %
80 - 120 bar	250 l/min	415 mm²	7.3 mm	10 %
130 - 170 bar	300 l/min	415 mm²	7.3 mm	10 %
180 - 200 bar	360 l/min	415 mm²	7.3 mm	10 %
210 - 250 bar	380 l/min	415 mm²	7.3 mm	10 %
260 - 300 bar	430 l/min	415 mm²	7.3 mm	10 %
310 - 350 bar	450 l/min	415 mm²	7.3 mm	10 %

[1)] The performance curves are measured with external drain.
For internal drain the tank pressure has to be added to curve.

4

p/Q performance curves [1)]

R4V10

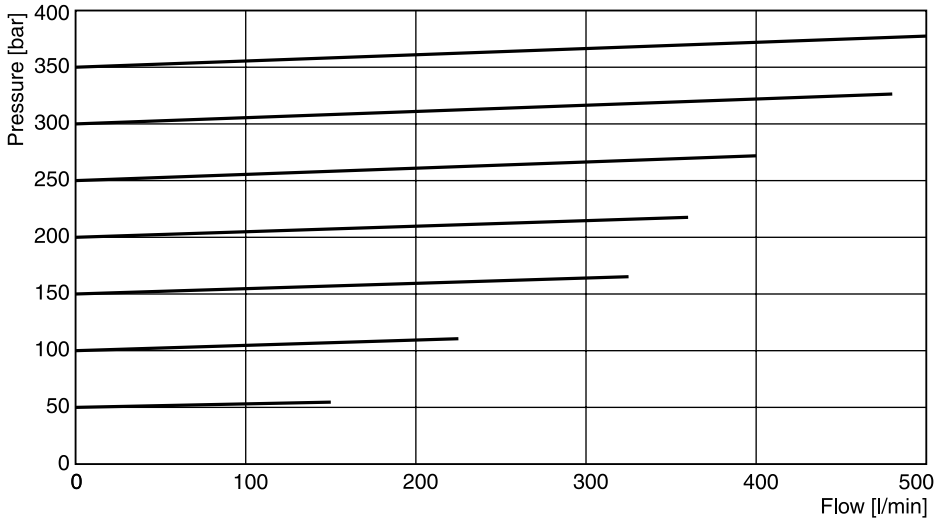

R4V10 nameplate data

Pressure stage	Q_{max}	min. opening width	Cartridge stroke	Permitted pressure increase
50 - 70 bar	150 l/min	607 mm²	7.3 mm	10 %
80 - 120 bar	225 l/min	607 mm²	7.3 mm	10 %
130 - 170 bar	325 l/min	607 mm²	7.3 mm	10 %
180 - 200 bar	360 l/min	607 mm²	7.3 mm	10 %
210 - 250 bar	400 l/min	607 mm²	7.3 mm	10 %
260 - 300 bar	480 l/min	607 mm²	7.3 mm	10 %
310 - 350 bar	500 l/min	607 mm²	7.3 mm	10 %

R6V06

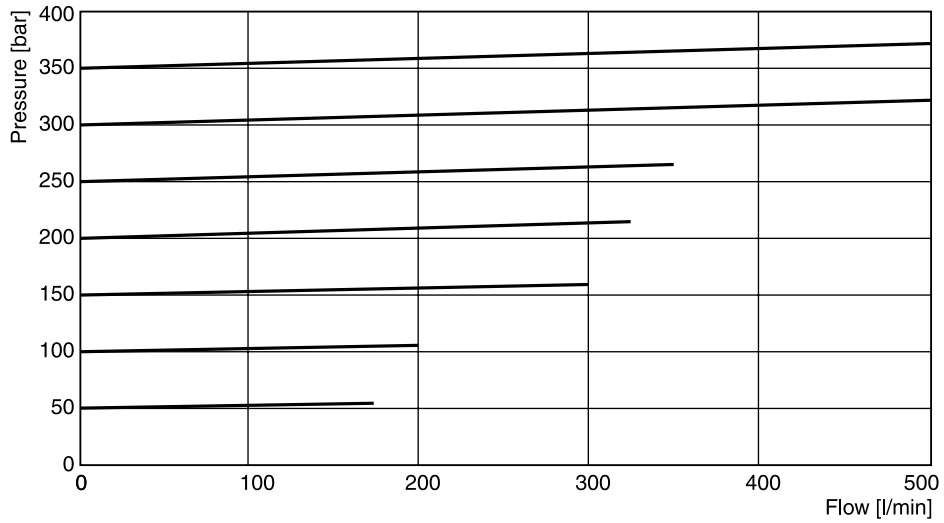

R6V06 nameplate data

Pressure stage	Q_{max}	min. opening width	Cartridge stroke	Permitted pressure increase
50 - 70 bar	170 l/min	415 mm²	7.3 mm	10 %
80 - 120 bar	200 l/min	415 mm²	7.3 mm	10 %
130 - 170 bar	300 l/min	415 mm²	7.3 mm	10 %
180 - 200 bar	325 l/min	415 mm²	7.3 mm	10 %
210 - 250 bar	350 l/min	415 mm²	7.3 mm	10 %
260 - 300 bar	500 l/min	415 mm²	7.3 mm	10 %
310 - 350 bar	500 l/min	415 mm²	7.3 mm	10 %

[1)] The performance curves are measured with external drain.
For internal drain the tank pressure has to be added to curve.

p/Q performance curves [1)]

R6V10

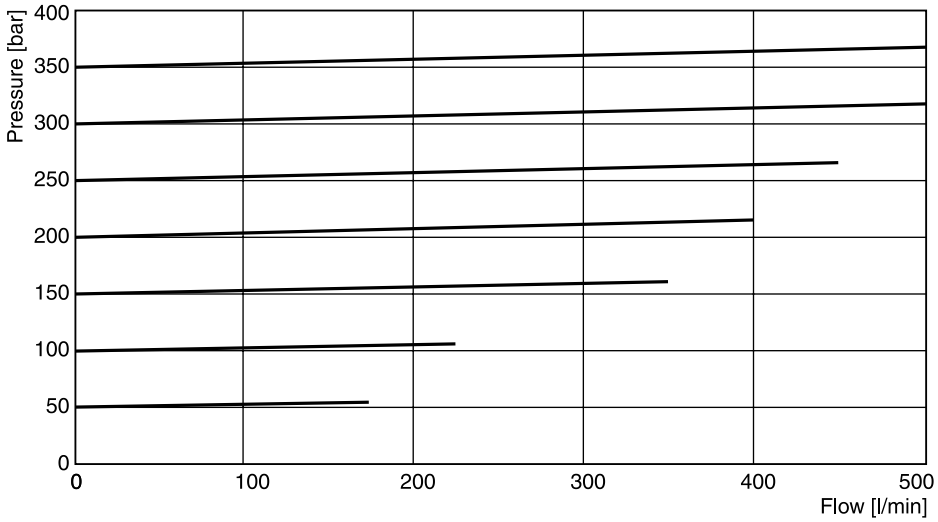

R6V10 nameplate data

Pressure stage	Q_{max}	min. opening width	Cartridge stroke	Permitted pressure increase
50 - 70 bar	170 l/min	607 mm²	7.3 mm	10 %
80 - 120 bar	225 l/min	607 mm²	7.3 mm	10 %
130 - 170 bar	350 l/min	607 mm²	7.3 mm	10 %
180 - 200 bar	400 l/min	607 mm²	7.3 mm	10 %
210 - 250 bar	450 l/min	607 mm²	7.3 mm	10 %
260 - 300 bar	500 l/min	607 mm²	7.3 mm	10 %
310 - 350 bar	500 l/min	607 mm²	7.3 mm	10 %

[1)] The performance curves are measured with external drain.
For internal drain the tank pressure has to be added to curve.

R6V

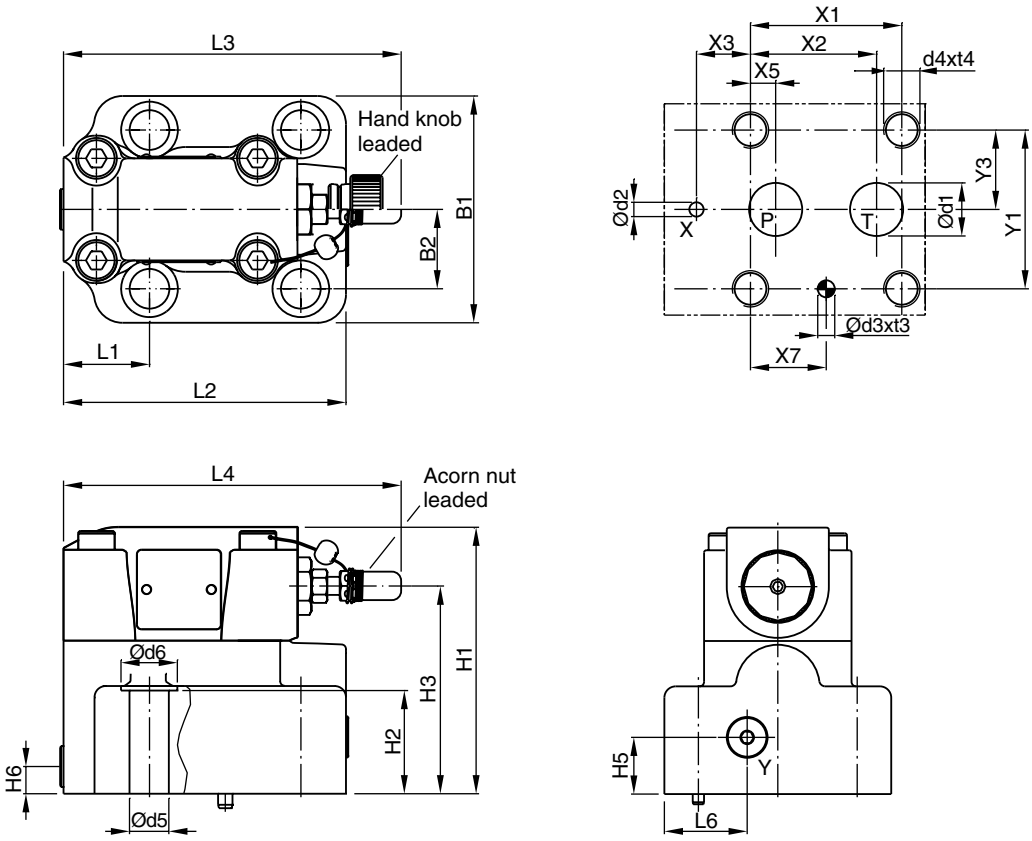

Y: external drain port G 1/8“

NG	ISO-code	x1	x2	x3	x4	x5	x6	x7	y1	y2	y3	y4	y5	y6
25	6264-08-13-*-97	66.7	55.6	23.8	–	11.1	–	33.4	70	–	35	–	–	–
32	6264-10-17-*-97	88.9	76.2	31.8	–	12.7	–	44.5	82.6	–	41.3	–	–	–

Tolerance at X and Y pin holes and screw holes ±0.1, at port holes ±0.2.

NG	ISO-code	B1	B2	H1	H2	H3	H4	H5	H6	L1	L2	L3	L4	L6
25	6264-08-13-*-97	100	35	117.5	46.5	91.5	–	25	12	37.9	124.5	141	144.8	36.5
32	6264-10-17-*-97	120	41.3	124.5	51.3	98.5		26.5	13.5	44.3	153	141	144.8	46.5

NG	ISO-code	d1max	d2max	d3	t3	d4	t4	d5	d6	Subplate [1]
25	6264-08-13-*-97	23.4	6.3	7.5	10	M16	27	17.5	25	SPP 6R10B 910
32	6264-10-17-*-97	32	6.3	7.5	10	M18	28	20	30	SPP 10R12B 910

NG	Bolt kit			Kit		Surface finish
				NBR	FPM	
25	BK366	4x M16x70 ISO 4762-12.9	264 Nm ±15 %	S26-96396-0	S26-96396-5	R_{max}6.3 ⏥ 0.01/100
32	BK507	4x M18x75 ISO 4762-12.9	398 Nm ±15 %	S26-96392-0	S26-96392-5	

[1] Details see chapter 12, series SPP.

R6V with vent function

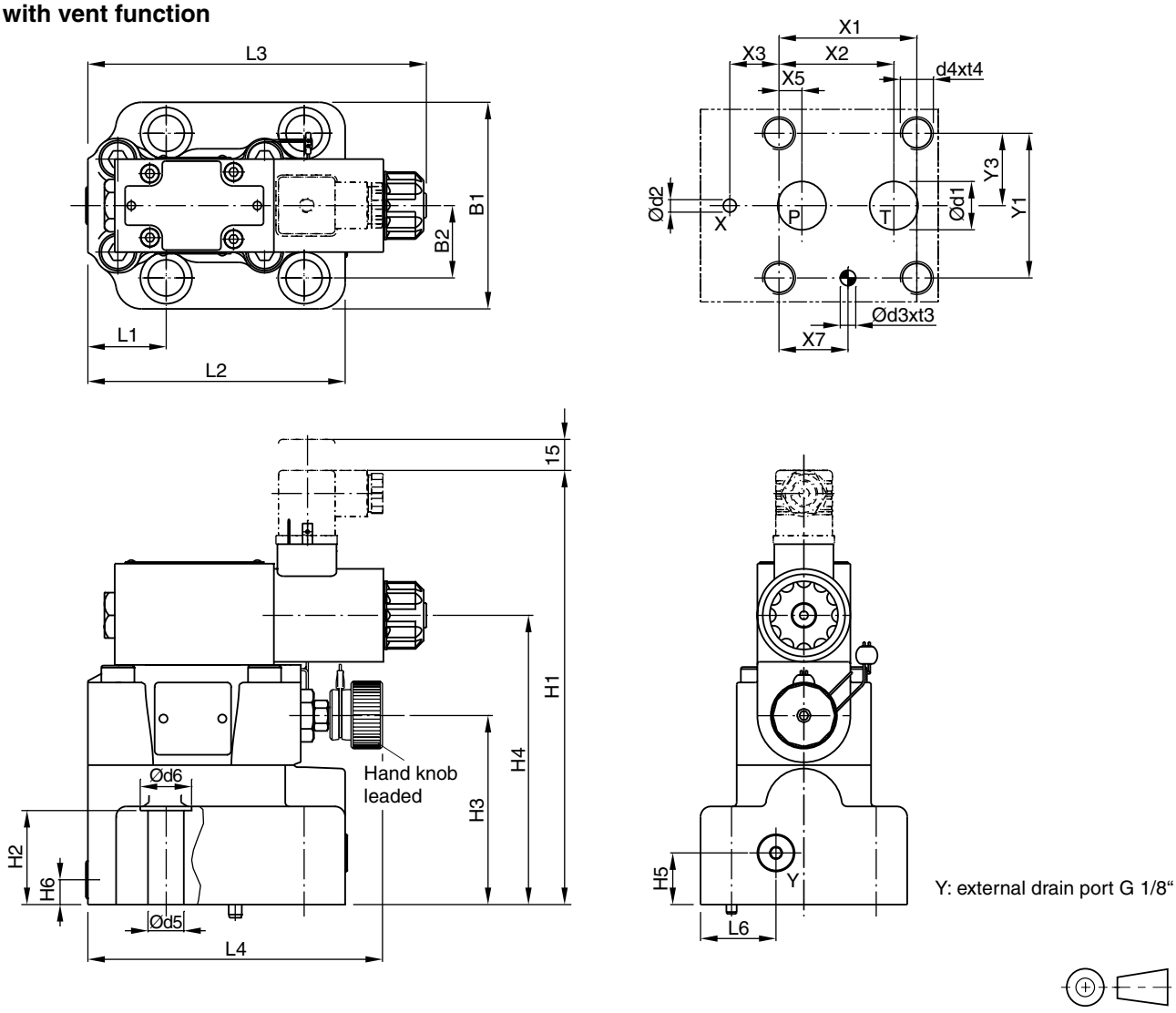

Y: external drain port G 1/8“

NG	ISO-code	x1	x2	x3	x4	x5	x6	x7	y1	y2	y3	y4	y5	y6
25	6264-08-13-*-97	66.7	55.6	23.8	–	11.1	–	33.4	70	–	35	–	–	–
32	6264-10-17-*-97	88.9	76.2	31.8	–	12.7	–	44.5	82.6	–	41.3	–	–	–

Tolerance at X and Y pin holes and screw holes ±0.1, at port holes ±0.2.

NG	ISO-code	B1	B2	H1	H2	H3	H4	H5	H6	L1	L2	L3	L4	L6
25	6264-08-13-*-97	100	35	206.9	46.5	91.5	139.8	25	12	37.9	124.5	163.8	141	36.5
32	6264-10-17-*-97	120	41.3	213.9	51.3	98.5	146.8	25	12	44.3	153	163.8	141	36.5

NG	ISO-code	d1max	d2max	d3	t3	d4	t4	d5	d6	Subplate [1]
25	6264-08-13-*-97	23.4	6.3	7.5	10	M16	27	17.5	25	SPP 6R10B 910
32	6264-10-17-*-97	32	6.3	7.5	10	M18	28	20	30	SPP 10R12B 910

NG	Bolt kit			Kit		Surface finish
				NBR	FPM	
25	BK366	4x M16x70 ISO 4762-12.9	264 Nm ±15 %	S26-96396-0	S26-96396-5	R_{max}6.3 / 0.01/100
32	BK507	4x M18x75 ISO 4762-12.9	398 Nm ±15 %	S26-96392-0	S26-96392-5	

[1] Details see chapter 12, series SPP.

R4V

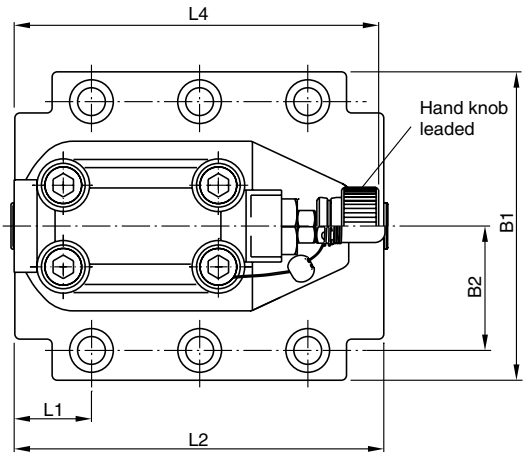

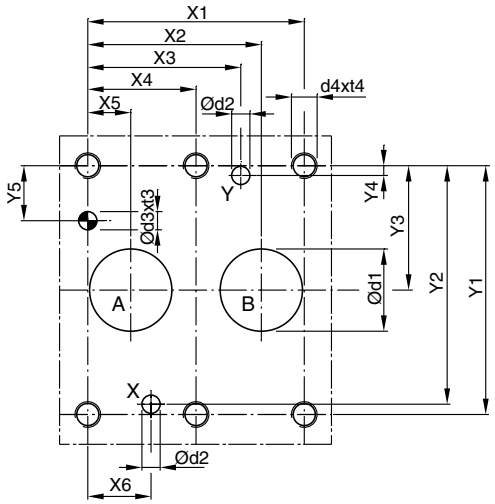

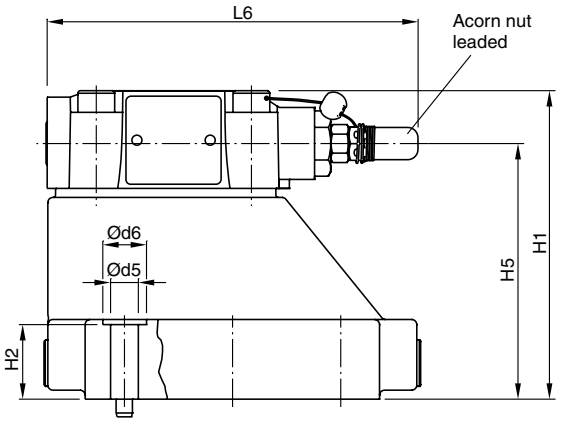

NG	ISO-code	x1	x2	x3	x4	x5	x6	x7	y1	y2	y3	y4	y5	y6
10	6264-06-07-*-97	42.9	35.8	21.5	–	7.2	21.5	0	66.7	58.8	33.4	7.9	14.3	–
25	6264-08-11-*-97	60.3	49.2	39.7	–	11.1	20.6	0	79.4	73	39.7	6.4	15.9	–
32	6264-10-15-*-97	84.2	67.5	59.5	42.1	16.7	24.6	0	96.8	92.8	48.4	3.8	21.4	–

Tolerance at X and Y pin holes and screw holes ±0.1, at port holes ±0.2.

NG	ISO-code	B1	B2	H1	H2	H3	H4	H5	H6	L1	L2	L4	L6
10	6264-06-07-*-97	87.3	33.35	83	21	–	–	62.5	–	25	90.8	143	144.8
25	6264-08-11-*-97	105	39.7	107.5	29	–	–	87	–	30.9	123	143	144.8
32	6264-10-15-*-97	120	48.4	120	30	–	–	99.5	–	29.8	143.5	143	144.8

NG	ISO-code	d1max	d2max	d3	t3	d4	t4	d5	d6	Subplate [1]
10	6264-06-07-*-97	15	7	7.1	8	M10	16	10.8	17	SPP 3M6B 910
25	6264-08-11-*-97	23.4	7.1	7.1	8	M10	18	10.8	17	SPP 6M8B 910
32	6264-10-15-*-97	32	7.1	7.1	8	M10	20	10.8	17	SPP 10M12B 910

NG	Bolt kit			Kit		Surface finish
				NBR	FPM	
10	BK505	4x M10x35 ISO 4762-12.9	63 Nm ±15 %	S26-58507-0	S26-58507-5	R_{max}6.3 ⏥ 0.01/100
25	BK485	4x M10x45 ISO 4762-12.9	63 Nm ±15 %	S26-58475-0	S26-58475-5	
32	BK506	6x M10x45 ISO 4762-12.9	63 Nm ±15 %	S26-58508-0	S26-58508-5	

[1] Details see chapter 12, series SPP.

Pressure relief valves of the series RE06M*W are direct operated proportional valves typically used as remote control valves for flow rates below 3 l/min.



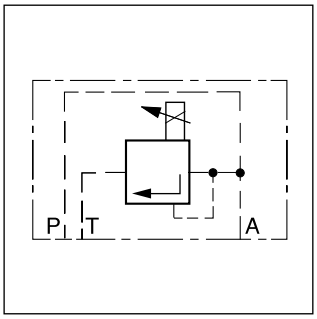

Function

When the pressure in port P or A exeeds the pressure setting at the solenoid, the cone opens to port T and limits the pressure in port P to the adjusted level.
The optimum performance can be achieved in combination with the digital amplifier module PCD00A-400.

Also available as sandwich valve, see Chapter 8, Pilot valves series RPDM.

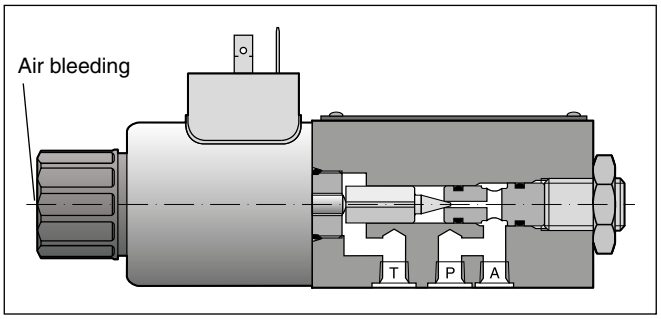

Features

- Direct operated with proportional solenoid
- Very low pressure adjustment of p_{min}
- 2 pressure ports, A and P
- Subplate mounting according to ISO 6264
- 4 pressure stages

4

Ordering Code

RE	06	M		W	2		1		W	
Proportional pressure relief valve	**NG06**	**Interface ISO 6264**	**Pressure stage**	**External electronics**		**Seals**	**Normally open**	**Solenoid voltage**	**Plug connection EN 175301-803**	**Design series** (not required for ordering)

Code	Pressure stage
10	up to 105 bar
17	**up to 175 bar**
25	up to 250 bar
35	**up to 350 bar**

Code	Solenoid voltage
K	**12 V, 2.5 A**
X	16 V, 1.3 A

Code	Seals
N	NBR
V	**FPM**

Bold letters =
Short-term availability

General		
Nominal size		DIN NG06 / CETOP 03 / NFPA D03
Interface		Subplate mounting according to ISO 6264
Mounting position		Unrestricted, horizontal mounting preferred
Ambient temperature	[°C]	-20 ... +60
$MTTF_D$ value	[years]	150
Weight	[kg]	1.8
Hydraulic		
Max. operating pressure	[bar]	Ports P and A up to 350; port T 30
Pressure stages	[bar]	105, 175, 250, 350
Nominal flow	[l/min]	See p/Q curves
Fluid		Hydraulic oil according to DIN 51524
Viscosity, permitted recommended	[cSt] / [mm²/s] [cSt] / [mm²/s]	20 ... 400 30 ... 80
Fluid temperature	[°C]	-20...+70 (NBR: -25...+70)
Filtration		ISO 4406 (1999); 18/16/13
Linearity	[%]	±2.8
Repeatability	[%]	<±1
Hysteresis	[%]	±1.5 of p_{max}
Electrical		
Duty ratio	[%]	100 ED
Protection class		IP65 in accordance with EN 60529 (with correctly mounted plug-in connector)
Nominal voltage	[V]	12 (2.5 A max. current), 16 (1.3 A max. current)
Coil resistance at 20 °C	[Ohm]	4.28 (at 12 V), 12 (at 16 V)
Solenoid connection		Connector as per EN 175301-803
Power amplifier, recommended		PCD00A-400

p/Q curves

Pressure stage 105 bar

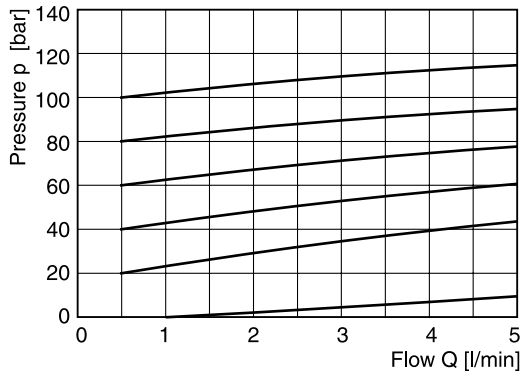

Pressure stage 350 bar

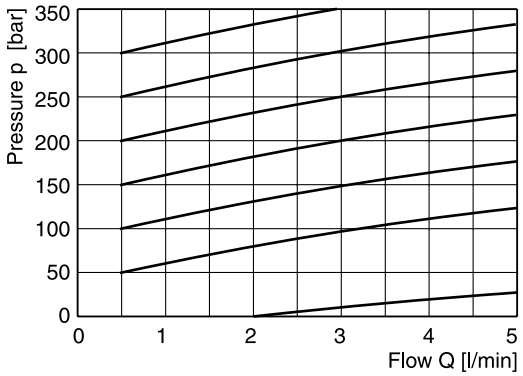

4

Min. adjusted pressure

Pressure stage 105 bar

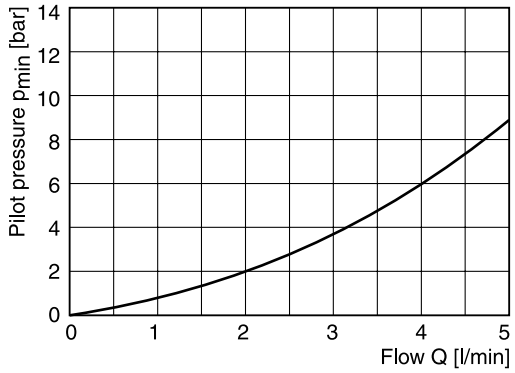

Pressure stage 350 bar

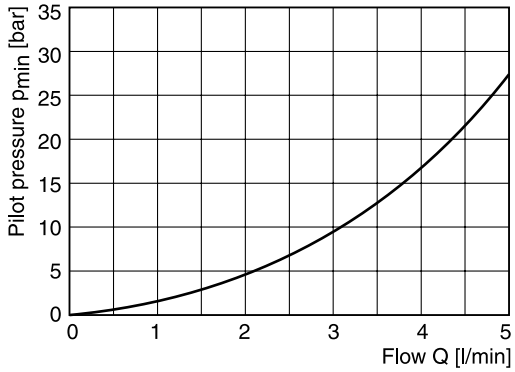

Pressure/signal curve

Pressure stage 105 bar

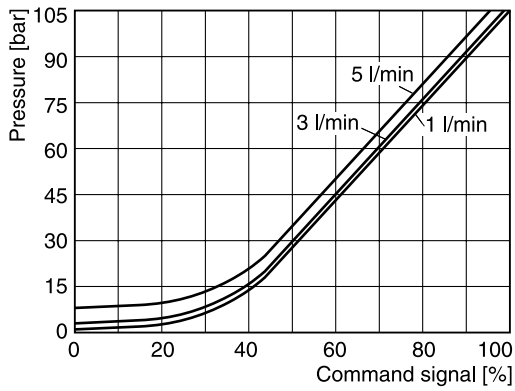

Pressure stage 350 bar

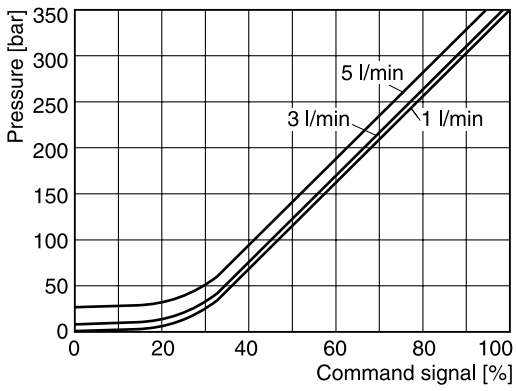

All characteristic curves measured with HLP46 at 50 °C.

RE06M*W

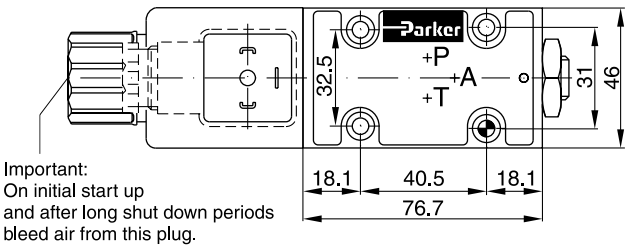

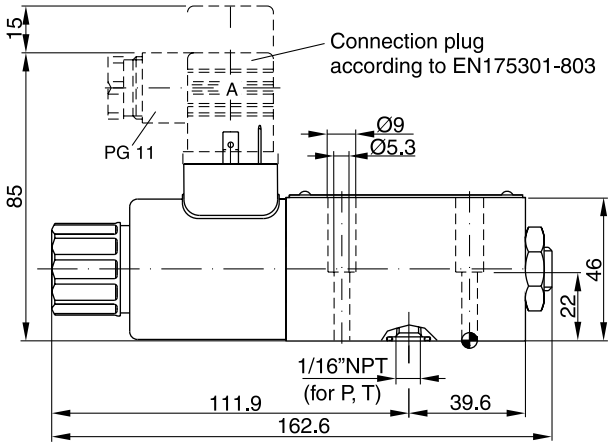

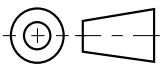

Surface finish	Bolt kit			Kit NBR	Kit FPM
$\sqrt{R_{max}6.3}$ 0.01/100	BK375	4x M5x30 ISO 4762-12.9	7.6 Nm ±15 %	SK-RE06MWN	SK-RE06MWV

Mounting pattern ISO 6264-03-04-*-97

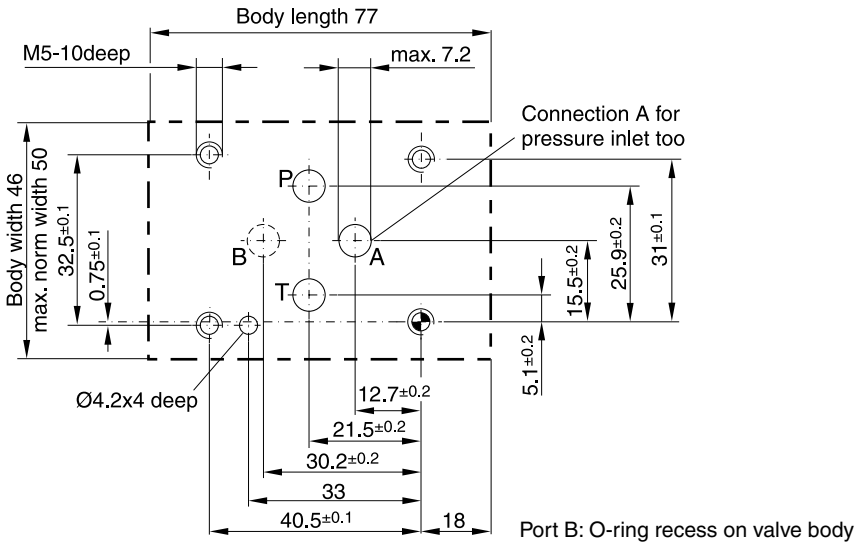

The proportional pressure relief valve series RE06M*T (NG06) with onboard electronics is based on the functionality of the digital amplifier PCD00.
The digital onboard electronics is situated in a robust metal housing and can be used in rough environments. The nominal values of the valves are factory set. Additionally the ProPxD software permits the editing of all parameters. The software is also used for the digital electronic modules. The cable for connection to a serial RS232C interface is available as accessory.



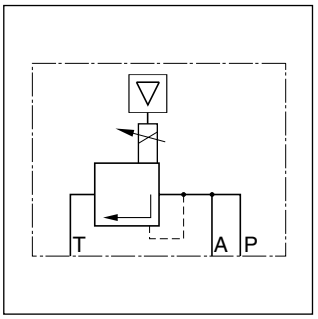

The electrical connection is available in 2 options:
Code F: 6 + PE central connection
+/- 10 V command signal
+10 V reference voltage output
Code R: 6 + PE central connection
4…20 mA command signal

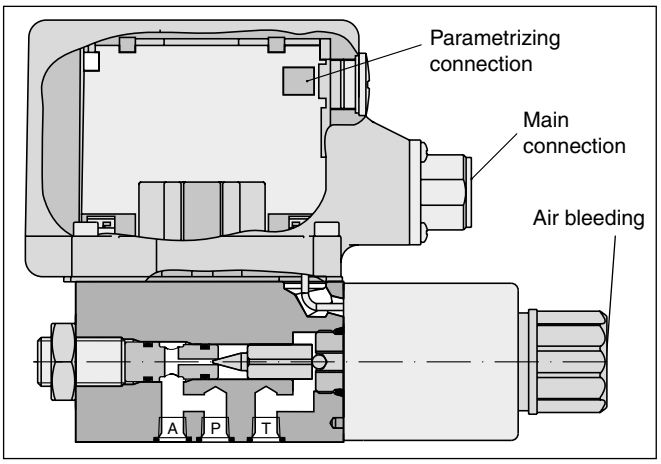

Function

When the pressure in port P or A exeeds the pressure setting at the solenoid, the cone opens to port T and limits the inlet pressure to the adjusted level.

The pressure adjustment is effected by applying current to the solenoid. The control signal is modulated to the solenoid current by the electronics.

Features

- Direct operated with proportional solenoid
- Onboard electronics
- Very low pressure adjustment of p_{min}
- Subplate mounting acc. to ISO 6264
- 6 pressure stages
- 2 pressure inlet ports A and P

Ordering code

RE	06	M		T	2		1		0	
Proportional pressure relief valve	**NG06**	**Interface ISO 6264**	**Pressure stages**	**Onboard electronics**		**Seals**	**Normally open**	**Command signal**	**Electronic attachment**	**Design series** (not required for ordering)

Code	Pressure stages
05	50 bar
10	105 bar
17	**175 bar**
21	**210 bar**
25	250 bar
35	**350 bar**

Code	Command signal
F	**Voltage input 0...+10 V with reference output +10 V**
R	Current input 4...20 mA

Code	Seals
N	NBR
V	**FPM**

Bold letters =
Short-term availability

Please order plugs separately, see chapter 4, accessories.
Parametrizing cable OBE → RS232, Item no. 40982923

General		
Nominal size		DIN NG06 / CETOP 03 / NFPA D03
Interface		Subplate mounting according to ISO 6264
Mounting position		Unrestricted, horizontal mounting preferred
Ambient temperature	[°C]	-20...+60
$MTTF_D$ value [1]	[years]	150
Weight	[kg]	2.2
Vibration strength	[g]	10 sinus 5...2000 Hz acc. to IEC 68-2-6 10 (RMS) noise 20...2000 Hz acc. to IEC 68-2-36 15 shock acc. to IEC 68-2-27
Hydraulic		
Max. operating pressure	[bar]	Ports A and P 350, connection T 30
Pressure stages	[bar]	50, 105, 175, 210, 250, 350
Nominal flow	[l/min]	See p/Q curves
Fluid		Hydraulic oil according to DIN 51524
Viscosity, permitted recommended	[cSt] / [mm²/s] [cSt] / [mm²/s]	20 ... 400 30 ... 80
Fluid temperature	[°C]	-20...+70 (NBR: -25...+70)
Filtration		ISO 4406; 18/16/13
Linearity	[%]	See curve
Repeatability	[%]	<±1
Hysteresis	[%]	±1.5 of p_{max}
Electrical		
Duty ratio ED	[%]	100
Protection class		IP65 in accordance with EN 60529 (with correctly mounted plug-in connector)
Supply voltage	[VDC]	18...30, ripple < 5 % eff., surge free
Current consumption max.	[A]	2.0
Pre-fusing	[A]	2.5 medium lag
Potentiometer supply	[V]	+10 / ±5 % max. 10 mA
Command signal		
Code F voltage Code R current	[V] [mA]	0...+10, ripple < 0.01 % eff., surge free, Ri = 100 kOhm 4...20, ripple < 0.01 % eff., surge free, Ri = <250 Ohm < 3.6 mA = enable off, > 3.8 mA = enable on (acc. NAMUR NE43)
Differential input voltage max.	[V]	30 for terminal D and E against PE (terminal G)
	[V]	11 for terminal D and E against 0V (terminal B)
Adjustment ranges Min current Max current Ramp	[%] [%] [s]	0...50 50...100 0...32.5
Interface		RS 232C, parametrizing connection 5polig
EMC		EN 61000-6-2, EN 61000-6-4
Central connection		6 + PE acc. EN 175201-804
Cable specification	[mm²]	7 x 1.0 overall braid shield
Cable length max.	[m]	50

[1] If valves with onboard electronics are used in safety-related parts of control systems, in case the safety function is requested, the valve electronics voltage supply is to be switched off by a suitable switching element with sufficient reliability.

Signal/pressure curve

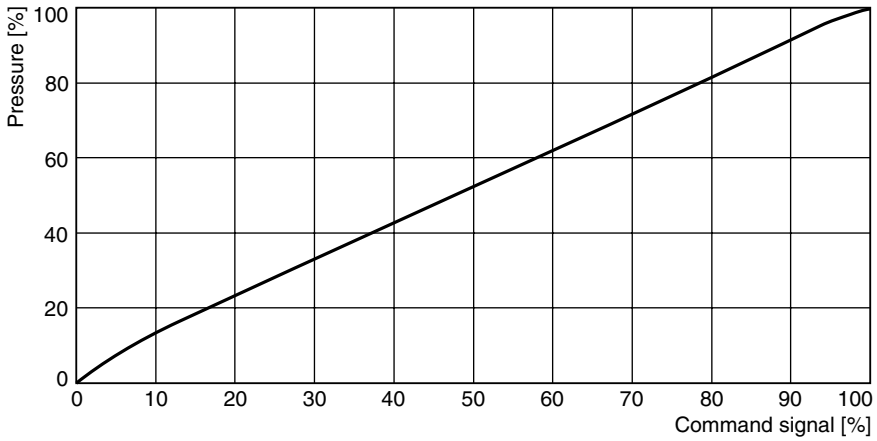

Min. adjusted pressure

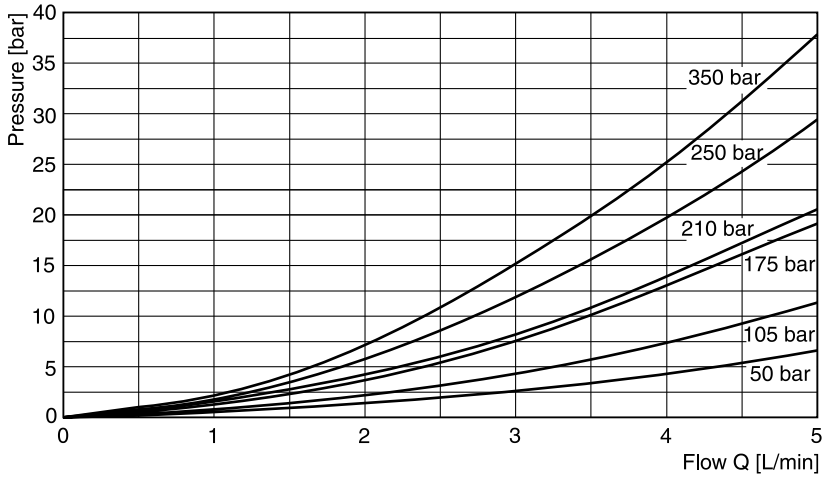

p/Q curve

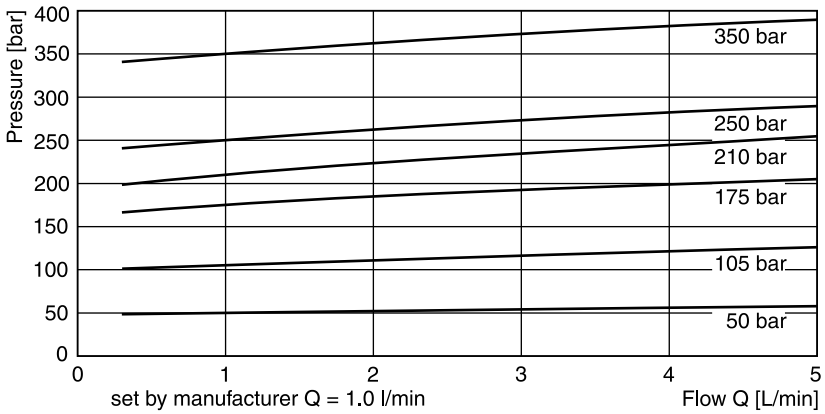

All characteristic curves measured with HLP46 at 50 °C.

Block diagram

Code F
6 + PE acc. EN 175201-804

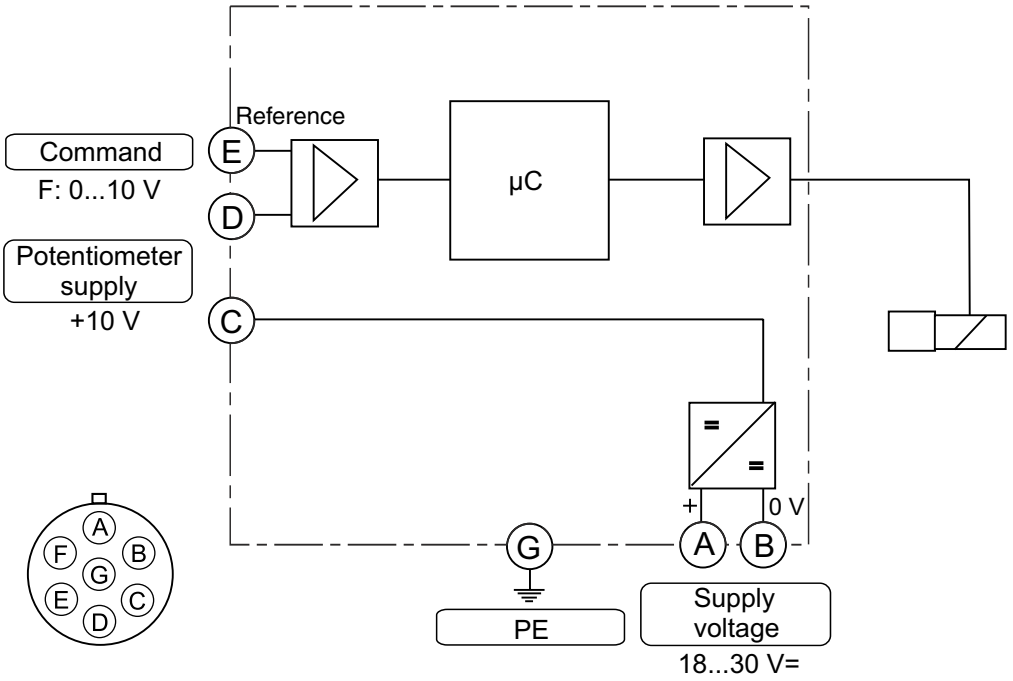

Code R
6 + PE acc. EN 175201-804

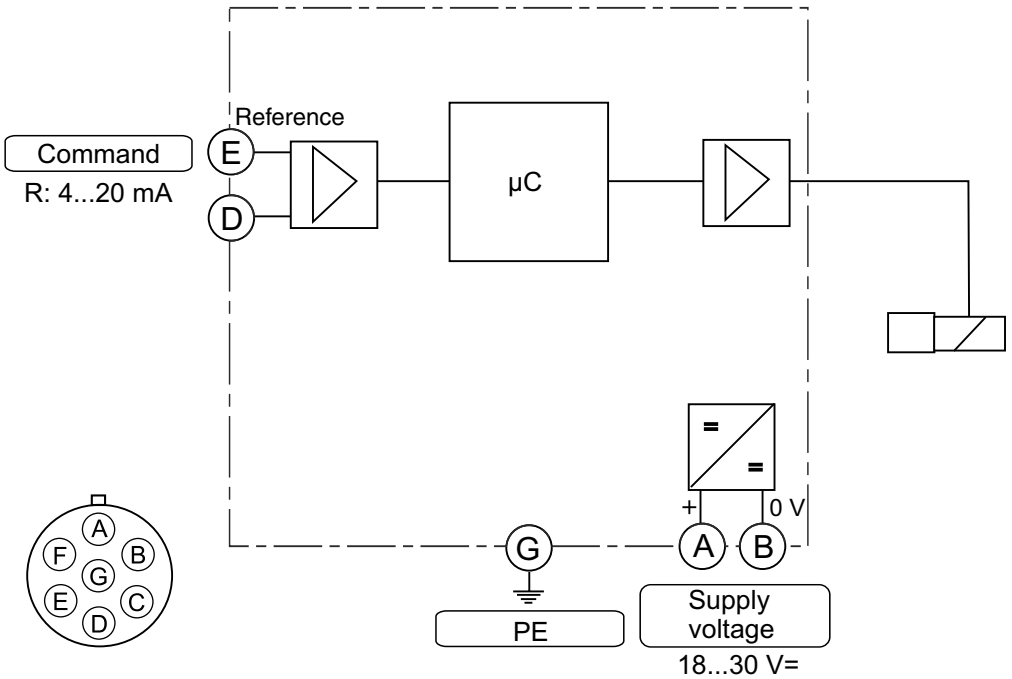

ProPxD interface program

The ProPxD software permits comfortable parameter setting for the module electronics. Via the clearly arranged entry mask the parameters can be noticed and modified. Storage of complete parameter sets is possible as well as printout or record as a text file for further documentation. Stored parameter sets may be loaded anytime and transmitted to other valves. Inside the electronics a non-volatile memory stores the data with the option for recalling or modification.

The PC software can be downloaded free of charge at www.parker.com/isde – see page “Support“ or directly at www.parker.com/propxd.

Features

- Comfortable editing of all parameters
- Depiction and documentation of parameter sets
- Storage and loading of optimized parameter adjustments
- Executable with all actual Windows® operating systems from Windows® XP upwards
- Plain communication between PC and electronics via serial interface RS232C

The parametrizing cable may be ordered under item no. 40982923.

4

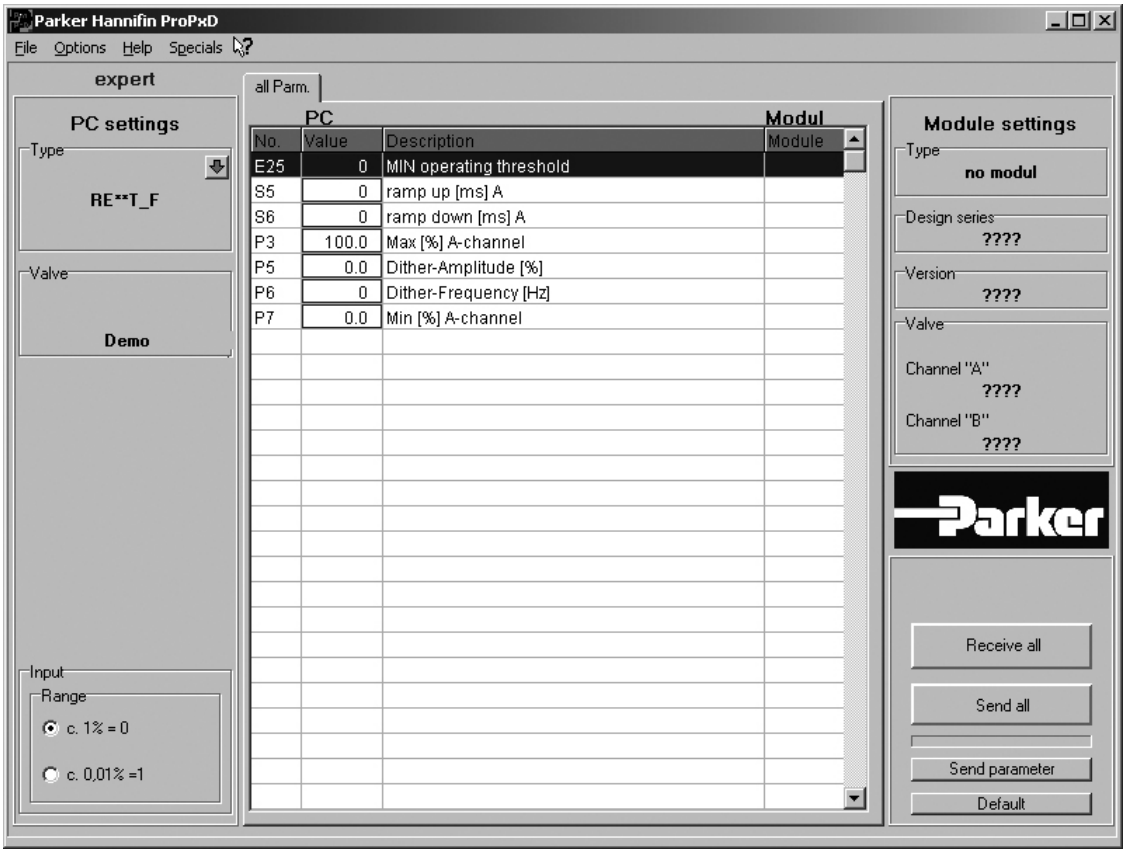

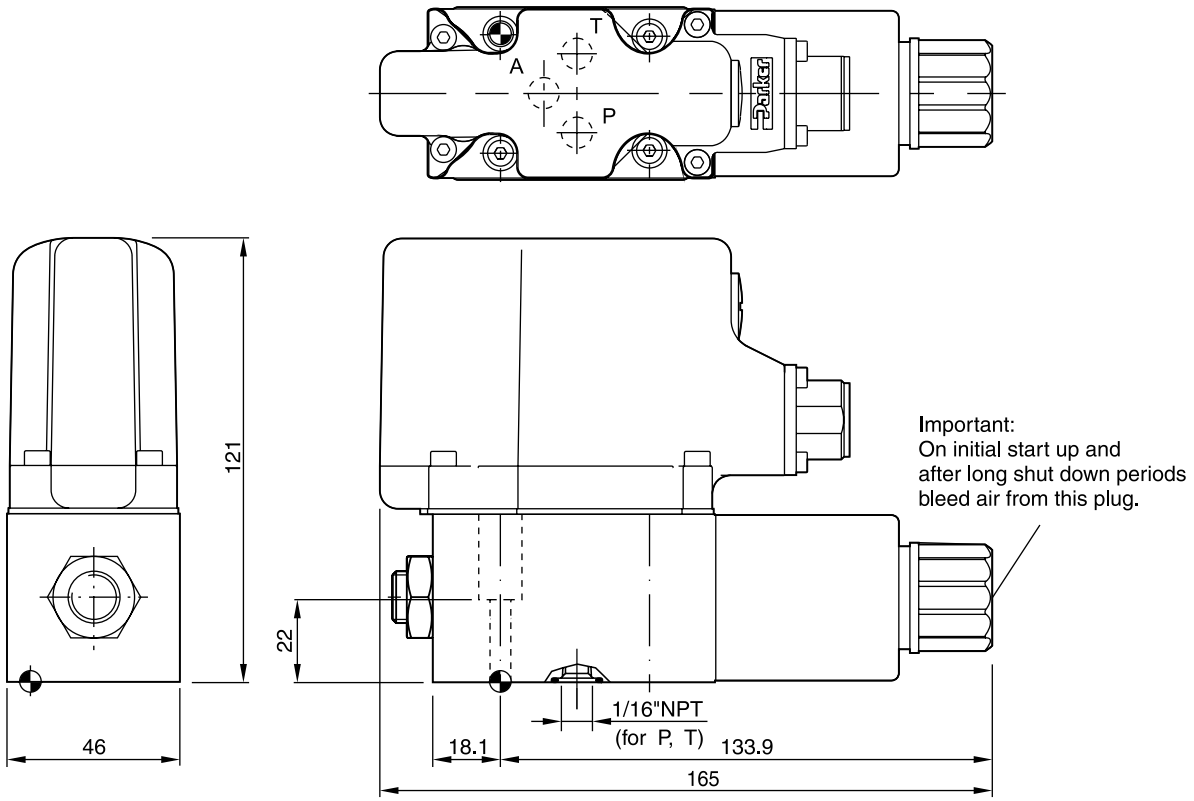

Surface finish	Bolt kit			Kit NBR	Kit FPM
$\sqrt{R_{max}6.3}$ 0.01/100	BK 375	4x M5x30 ISO 4762-12.9	7.6 Nm ±15 %	SK-RE06MTN	SK-RE06MTV

Mounting pattern ISO 6264-03-04-*-97

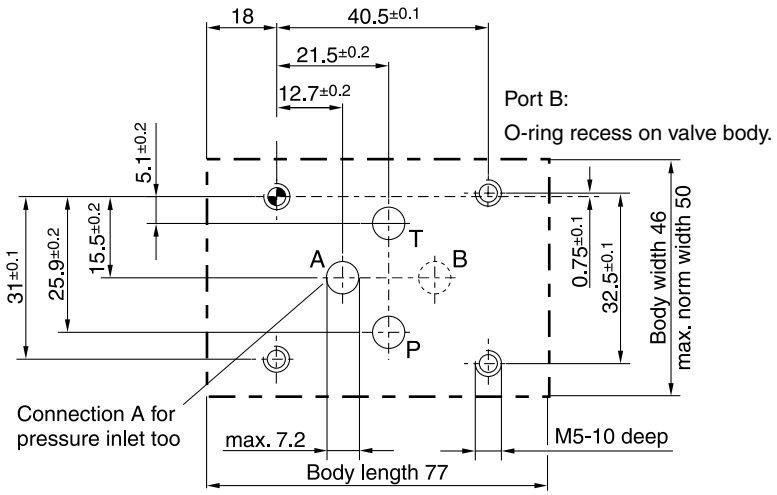

Pilot operated proportional pressure relief valves series R4V (DIN 24340 Form D) and R6V (DIN 24340 Form E) consist of a proportionally adjusted pilot stage and a seated type main stage.

The optimum performance can be achieved in combination with the digital amplifier module PCD00A-400.

Features

- Pilot operated with proportional solenoid
- 2 interfaces:
  - R4V subplate ISO 6264 (DIN 24340 Form D)
  - R6V subplate ISO 6264 (DIN 24340 Form E)
- 3 pressure stages
- Mechanical maximum pressure adjustment (optional for R6V)



R6V06



R4V06

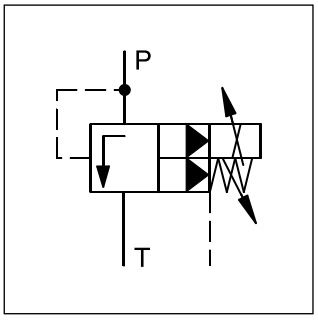

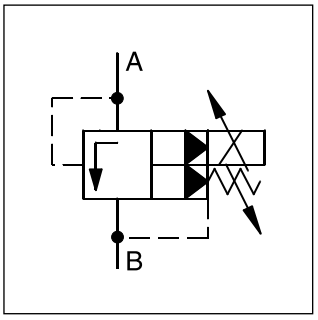

4

R6V06

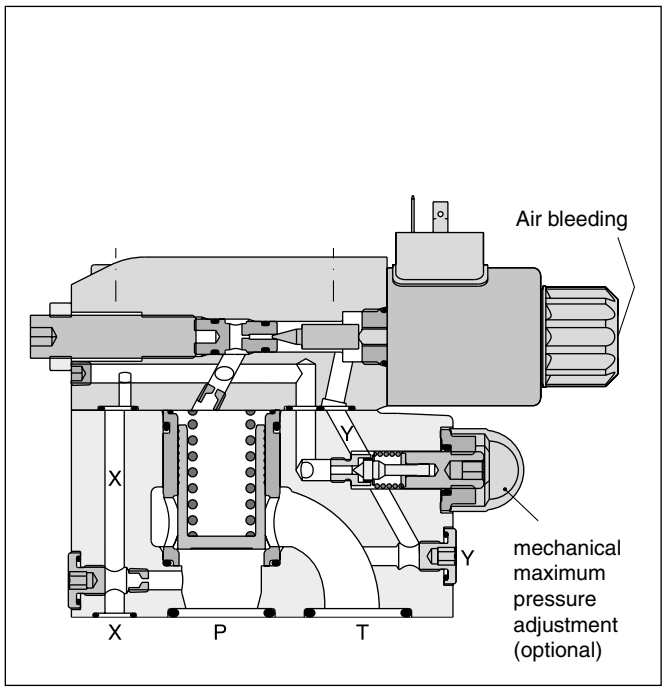

R4V06

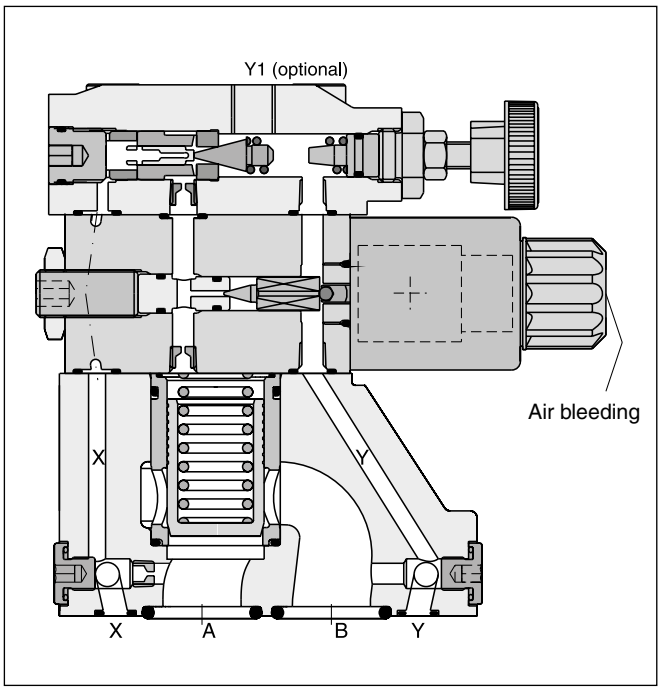

R		V		–	5						G0R					
Pressure valve	**Interface**	**Relief function**	**Nominal size**		**Max. pressure (350 bar)**	**Drain port**	**Pressure stages**	**Mechanical adjustment**	**Pilot oil**	**Options**	**Solenoid voltage 12 V / 2.3 A**	**Design**	**Seals**	**Design series** (not required for ordering)	**Modifi-cations**

Code	Interface	
4	Subplate mounting ISO 6264	NG10 and 25 / NG32 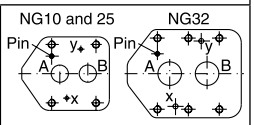
6		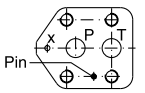

Code	Seals
1	NBR
5	FPM

Code	Design
A	R4V
B	R6V

Code	Nominal size
03	NG10
06	NG25
10	NG32

Code	Options
P2	With mechanical max. adjustment
PS [5]	w/o mechanical max. adjustment

Code	Interface	Drain port
3	R4V	Y port in mounting pattern
9	R6V	Y-port = G 1/8“

Pilot oil	
Code	Drain line
0	internal
1 [3]	external from sub-plate
2 [4]	external from valve body (Y-port)

Code	Pressure stages [1]
1	up to 105 bar
3	up to 210 bar
5	up to 350 bar

Code	Interface	Mechanical adjustment
P [2]	R6V	Hexagon screw with lock nut
1	R4V	Hand knob
3	R4V	Acorn nut with lead seal

[1] Other pressure stages on request.
[2] Use code P also for valve w/o mechanical adjustment.
[3] R4V only.
[4] R6V only.
[5] Not for R4V.

General					
Nominal size			**10**	**25**	**32**
Interface			Subplate mounting acc. ISO 6264		
Mounting position			Unrestricted, horizontal mounting preferred		
Ambient temperature		[°C]	-20...+60		
$MTTF_D$ value		[years]	75		
Weight	Series R6V	[kg]	5.2	6.4	8.3
	Series R4V	[kg]	4.5	6.3	7.8
Hydraulic					
Max. operating pressure		[bar]	Ports P (or A) and X up to 350, port T (or B) and Y 30		
Pressure stages		[bar]	105, 210, 350		
Nominal flow		[l/min]	250	500	650
Fluid			Hydraulic oil according to DIN 51524		
Viscosity,	permitted	[cSt] / [mm²/s]	20 ... 400		
	recommended	[cSt] / [mm²/s]	30 ... 80		
Fluid temperature		[°C]	-20...+70 (NBR: -25...+70)		
Filtration			ISO 4406 (1999); 18/16/13		
Electrical (prop. solenoid)					
Duty ratio		[%]	100 ED; CAUTION: coil temperature up to 150 °C possible		
Protection class			IP65 in accordance with EN 60529 (with correctly mounted plug-in connector)		
Supply voltage		[V]	12 V =		
Max. current		[A]	2.1		
Coil resistance at 20 °C		[Ohm]	4.28		
Solenoid connection			Connector as per EN 175301-803		
Power amplifier, recommended			PCD00A-400		

4

R4V Signal/pressure curve

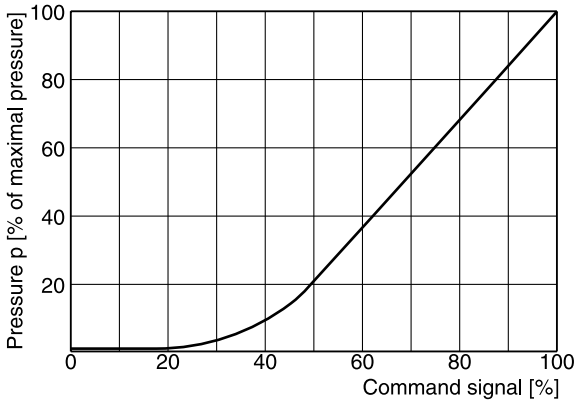

R6V Signal/pressure curve

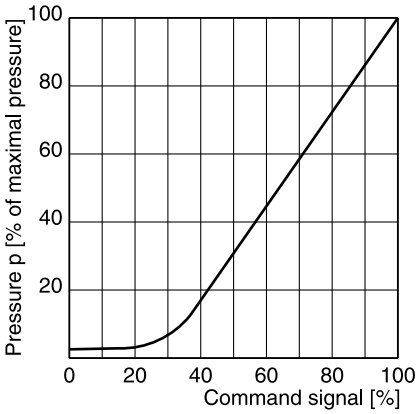

p/Q performance curves [1)]

R4V / R6V03

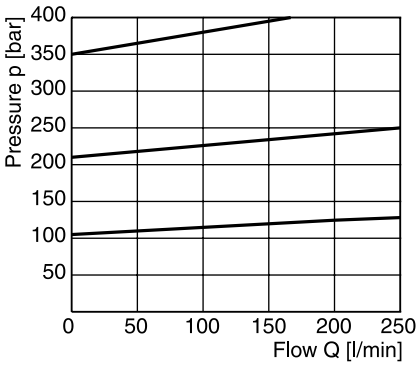

R4V / R6V06

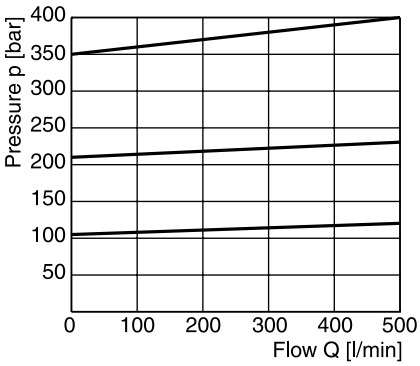

R4V / R6V10

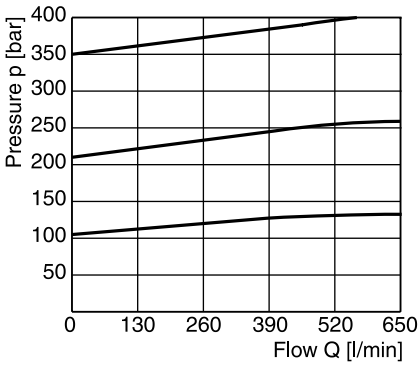

Minimum pressure curves [1)]

R4V / R6V03

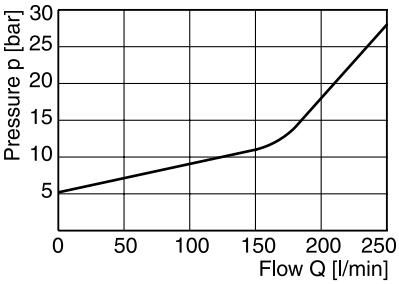

R4V / R6V06

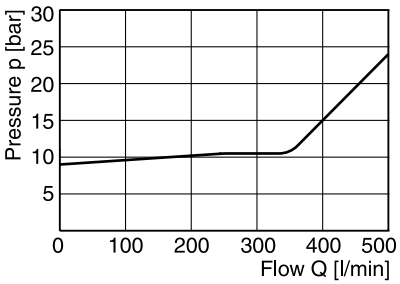

R4V / R6V10

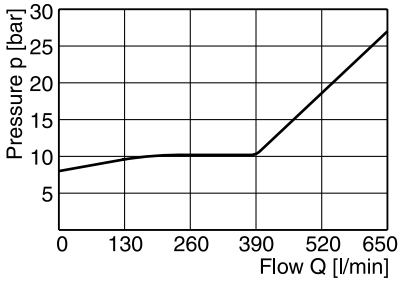

All characteristic curves measured with HLP46 at 50 °C.

[1)] The performance curves are measured with external drain.
For internal drain the tank pressure has to be added to curve.

R4V

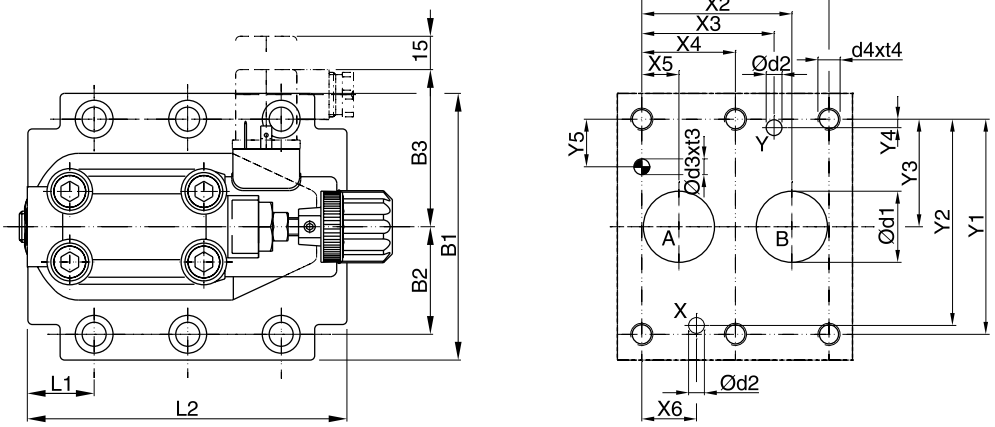

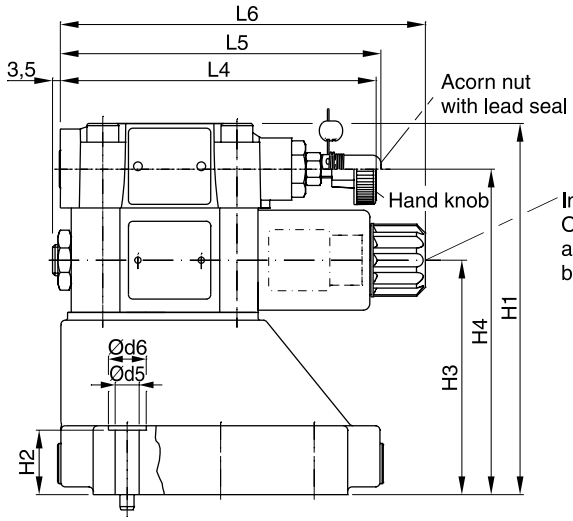

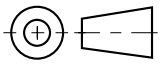

NG	ISO-code	x1	x2	x3	x4	x5	x6	x7	y1	y2	y3	y4	y5	y6
10	6264-06-07-*-97	42.9	35.8	21.5	–	7.2	21.5	0	66.7	58.8	33.4	7.9	14.3	–
25	6264-08-11-*-97	60.3	49.2	39.7	–	11.1	20.6	0	79.4	73	39.7	6.4	15.9	–
32	6264-10-15-*-97	84.2	67.5	59.5	42.1	16.7	24.6	0	96.8	92.8	48.4	3.8	21.4	–

Tolerance at X and Y pin holes and screw holes ±0.1, at port holes ±0.2.

NG	ISO-code	B1	B2	B3	H1	H2	H3	H4	H6	L1	L2	L3	L4	L5	L6
10	6264-06-07-*-97	87.3	33.35	71	130	21	68.5	109.5	–	25	90.8	–	143	144.8	164.8
25	6264-08-11-*-97	105	39.7	71	154.5	29	93	134	–	30.9	123	–	143	144.8	164.8
32	6264-10-15-*-97	120	48.4	71	167	30	105.5	146.5	–	29.8	143.5	–	143	144.8	164.8

NG	ISO-code	d1max	d2max	d3	t3	d4	t4	d5	d6	Subplate [1]
10	6264-06-07-*-97	15	7	7.1	8	M10	16	10.8	17	SPP 3M6B 910
25	6264-08-11-*-97	23.4	7.1	7.1	8	M10	18	10.8	17	SPP 6M8B 910
32	6264-10-15-*-97	32	7.1	7.1	8	M10	20	10.8	17	SPP 10M12B 910

NG	Bolt kit			Kit NBR	Kit FPM	Surface finish
10	BK505	4x M10x35 ISO 4762-12.9	63 Nm ±15 %	S26-58507-0 [2]	S26-58507-5 [2]	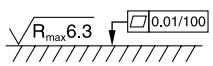
25	BK485	4x M10x45 ISO 4762-12.9	63 Nm ±15 %	S26-58475-0 [2]	S26-58475-5 [2]	
32	BK506	4x M10x45 ISO 4762-12.9	63 Nm ±15 %	S26-58508-0 [2]	S26-58508-5 [2]	
Prop. section P2				S26-58473-0	S26-58473-5	

[1] Details see chapter 12, series SPP.

[2] Please combine seal kit of one size with seal kit of prop. section P2 for complete seal kit.

R6V

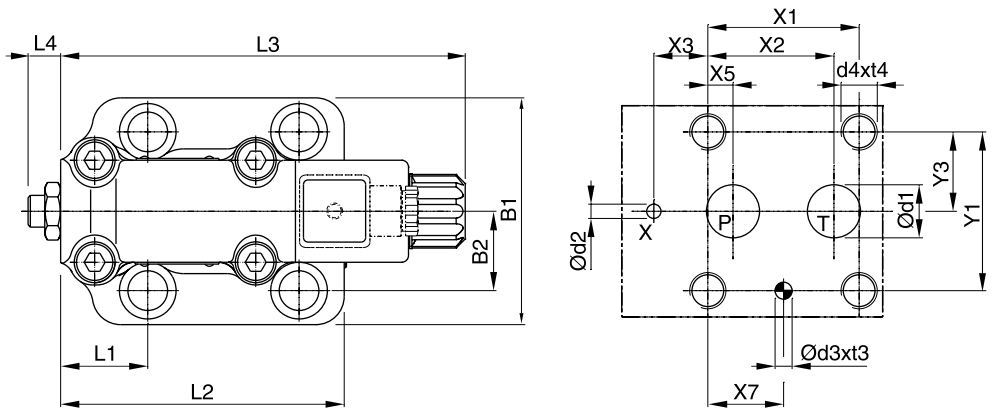

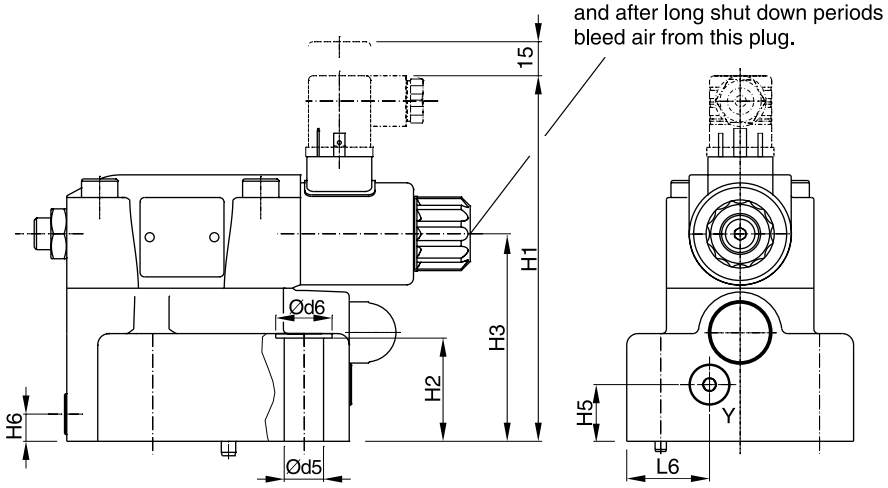

Y: external drain port G 1/8“

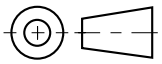

NG	ISO-code	x1	x2	x3	x4	x5	x6	x7	y1	y2	y3	y4	y5	y6
10	6264-06-09-*-97	53.8	47.5	0	–	22.1	–	22.1	53.8	–	26.9	–	–	–
25	6264-08-13-*-97	66.7	55.6	23.8	–	11.1	–	33.4	70	–	35	–	–	–
32	6264-10-17-*-97	88.9	76.2	31.8	–	12.7	–	44.5	82.6	–	41.3	–	–	–

Tolerance at X and Y pin holes and screw holes ±0.1, at port holes ±0.2.

NG	ISO-code	B1	B2	H1	H2	H3	H4	H5	H6	L1	L2	L3	L4	L5	L6
10	6264-06-09-*-97	80	26.9	158.7	27	88	–	20.5	25	52	117	182.3	14.4	–	29.5
25	6264-08-13-*-97	100	35	161.2	46.5	91.5	–	25	12	37.9	124.5	182.3	14.4	–	36.5
32	6264-10-17-*-97	120	41.3	166.7	51.3	98.5	–	26.5	13.5	44.3	153	182.3	14.4	–	46.5

NG	ISO-code	d1max	d2max	d3	t3	d4	t4	d5	d6	Subplate [1]
10	6264-06-09-*-97	14.7	4.8	7.5	10	M12	20	13.5	20	SPP 3R6B 910
25	6264-08-13-*-97	23.4	6.3	7.5	10	M16	27	17.5	25	SPP 6R10B 910
32	6264-10-17-*-97	32	6.3	7.5	10	M18	28	20	30	SPP 10R12B 910

NG	Bolt kit			Kit		Surface finish
				NBR	FPM	
10	BK494	4x M12x45 ISO 4762-12.9	108 Nm ±15 %	S26-98589-0	S26-98589-5	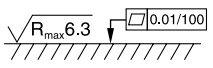
25	BK366	4x M16x70 ISO 4762-12.9	264 Nm ±15 %	S26-96396-0	S26-96396-5	
32	BK507	4x M18x75 ISO 4762-12.9	398 Nm ±15 %	S26-96392-0	S26-96392-5	

[1] Details see chapter 12, series SPP.

The proportional solenoid operated pilot stage with integrated electronics controls a seated type main stage. The valves are optionally available with a mechanical maximum pressure adjustment.
The onboard electronics of the proportional pressure relief valves is based on the functionality of the digital amplifier PCD00.
The digital onboard electronics is situated in a robust metal housing and can be used in rough environments.
The nominal values of the valves are factory set. Additionally the ProPxD software permits the editing of all parameters. The software is also used for the digital electronic modules. The cable for connection to a serial RS232C interface is available as accessory.
The electrical connection is available in 2 options:

Code 10V: 6 + PE central connection
0...+10 V command signal
+10 V reference voltage output

Code 4MA: 6 + PE central connection
4…20 mA command signal


R6V06

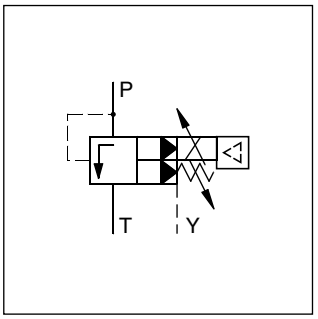

R6V

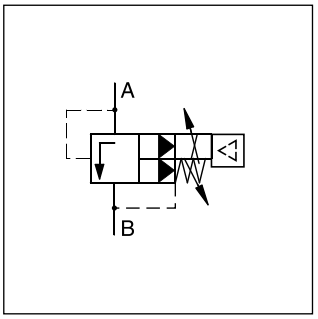

R4V

Features

- Pilot operated with proportional solenoid
- Onboard electronics factory set
- Ramp time adjustment
- Linearized characteristics
- 3 pressure stages
- 2 interfaces:
  - R4V subplate ISO 6264 (DIN 24340 Form D)
  - R6V subplate ISO 6264 (DIN 24340 Form E)
- Optional mechanical maximum pressure adjustment

R4V06

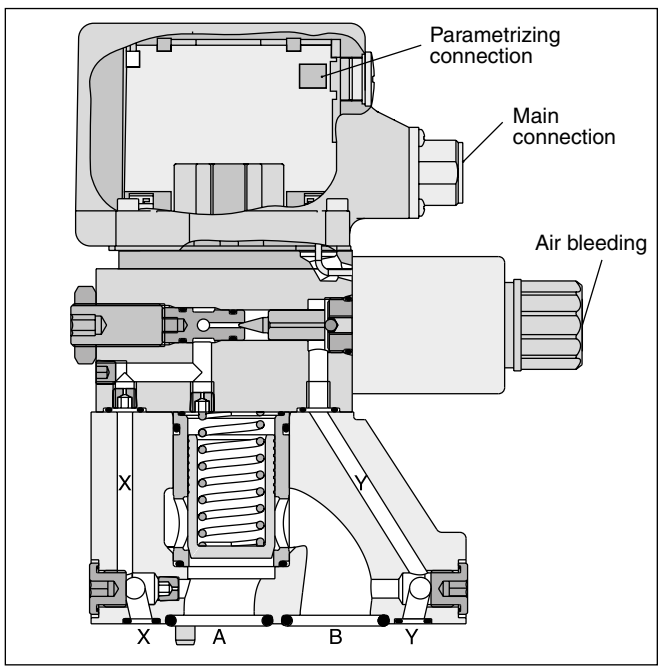

R6V06

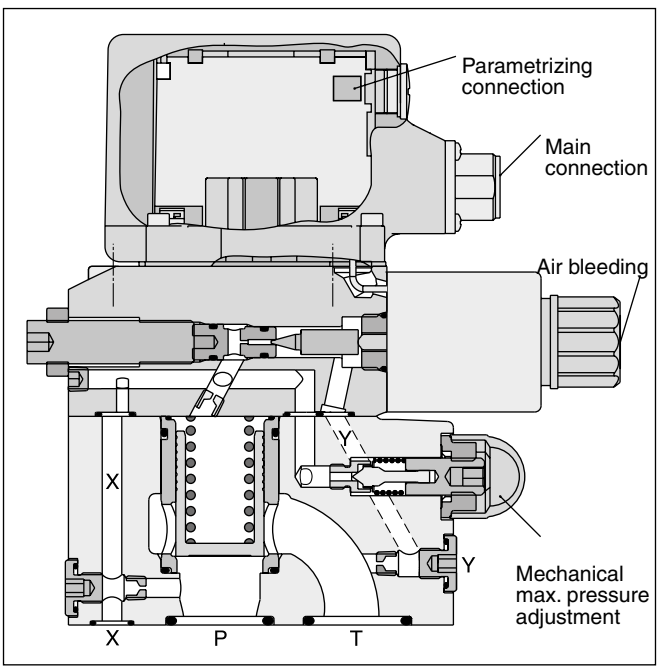

R		V		5			P							
Pressure valve	**Interface**	**Relief function**	**Nominal size**	**Max. pressure (350 bar)**	**Drain port**	**Pressure setting range**	**Proportional operation**	**Pilot oil**	**Options**	**Command signal**	**Design**	**Seals**	**Design series** (not required for ordering)	**Modifi-cations**

Code	Interface	
4	Subplate mounting ISO 6264	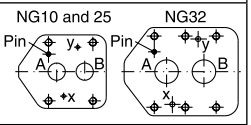
6		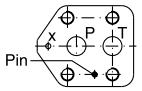

Code	Nominal size
03	NG10
06	NG25
10	NG32

Code	Interface	Drain port
3	R4V	Y from subplate
9	R6V	Y-port = G 1/8“

Code	Pressure stages [1]
1	up to 105 bar
3	up to 210 bar
5	up to 350 bar

Code	Seals
1	NBR
5	FPM

Code	Design
A	R4V
B	R6V

Code	Command signal
10V	0...10 V (ref. output +10 V)
4MA	4...20 mA

Code	Options
PN	w/o mech. max. adjustment
PM [4]	With mech. max. adjustment

Pilot oil	
Code	Drain line
0	internal
1 [2]	external from subplate
2 [3]	external from valve body (Y-port)

Please order plugs separately, see chapter 4, accessories.
Parametrizing cable OBE → RS232, item no. 40982923.

[1] Other pressure stages on request.
[2] R4V only.
[3] R6V only.
[4] R4V: adjustment with acorn nut.

General					
Nominal size			**NG10**	**NG25**	**NG32**
Interface			Subplate mounting acc. ISO 6264		
Mounting position			Unrestricted, horizontal mounting preferred		
Ambient temperature		[°C]	-20...+60		
$MTTF_D$ value [1]		[years]	75		
Weight	Series R6V	[kg]	5.4	6.6	8.6
	Series R4V	[kg]	4.5	6.3	7.8
Vibration strength		[g]	10 sinus 5...2000 Hz acc. to IEC 68-2-6 10 (RMS) noise 20...2000 Hz acc. to IEC 68-2-36 15 shock acc. to IEC 68-2-27		
Hydraulic					
Max. operating pressure		[bar]	Ports P (or A) and X up to 350, port T (or B) and Y 30		
Pressure stages		[bar]	105, 210, 350		
Nominal flow		[l/min]	250	500	650
Fluid			Hydraulic oil according to DIN 51524		
Viscosity, permitted		[cSt] / [mm²/s]	20 ... 400		
recommended		[cSt] / [mm²/s]	30 ... 80		
Fluid temperature		[°C]	-20...+70 (NBR: -25...+70)		
Filtration			ISO 4406; 18/16/13		
Hysteresis		[%]	< 1.5		
Electrical					
Duty ratio ED		[%]	100		
Protection class			IP65 in accordance with EN 60529 (with correctly mounted plug-in connector)		
Supply voltage		VDC	18...30, ripple < 5 % eff., surge free		
Current consumption max.		[A]	2.0		
Pre-fusing		[A]	2.5 medium lag		
Potentiometer supply		[V]	+10 / ±5 % max. 10 mA		
Command signal Code 10V voltage Code 4MA current		 [V] [mA]	 0...+10, ripple < 0.01 % eff., surge free, Ri = 100 kOhm 4...20, ripple < 0.01 % eff., surge free, Ri = <250 Ohm < 3.6 mA = enable off, > 3.8 mA = enable on (acc. NAMUR NE43)		
Differential input voltage max.		[V]	30 for terminal D and E against PE (terminal G)		
		[V]	11 for terminal D and E against 0V (terminal B)		
Adjustment ranges	Min current	[%]	0...50		
	Max current	[%]	50...100		
	Ramp	[s]	0...32.5		
Interface			RS232C, parametrizing connection 5pole		
EMC			EN 61000-6-2, EN 61000-6-4		
Central connection			6 + PE acc. EN 175201-804		
Cable specification		[mm²]	7 x 1.0 overall braid shield		
Cable length max.		[m]	50		

[1] If valves with onboard electronics are used in safety-related parts of control systems, in case the safety function is requested, the valve electronics voltage supply is to be switched off by a suitable switching element with sufficient reliability.

R4V/R6V

Command/pressure curve

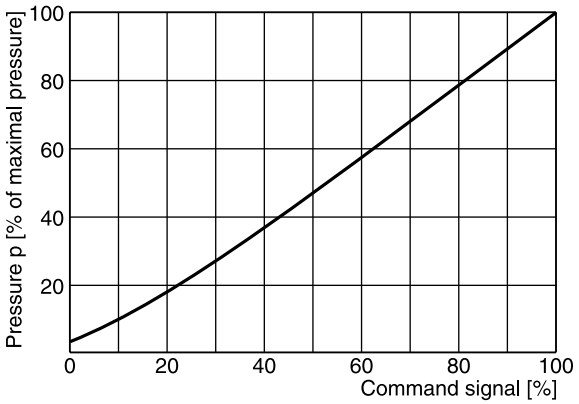

4

p/Q performance curves [1)]

R4V / R6V03

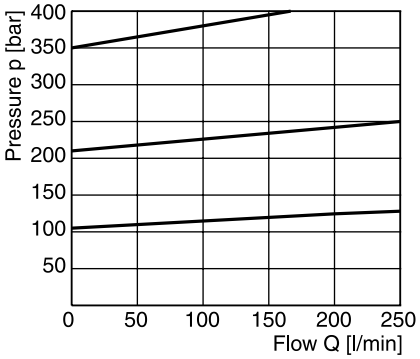

R4V / R6V06

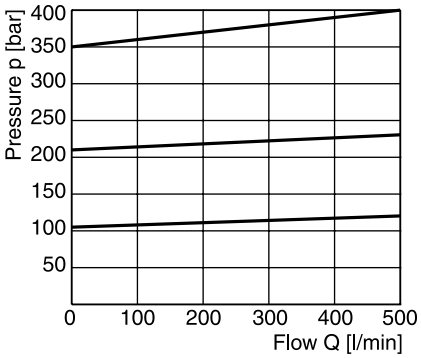

R4V / R6V10

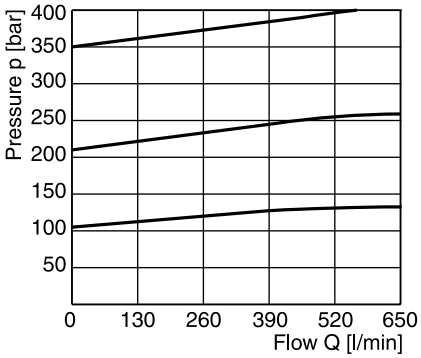

Minimum pressure curves [1)]

R4V / R6V03

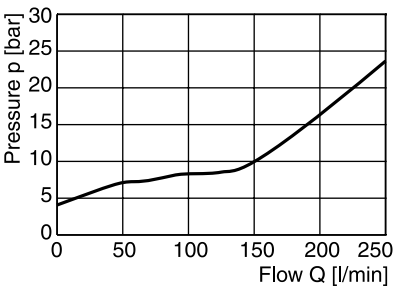

R4V / R6V06

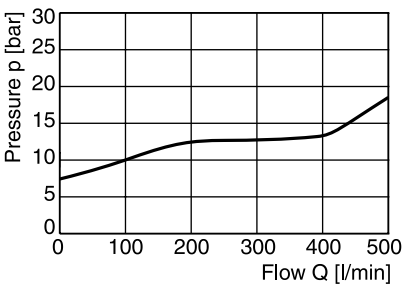

R4V / R6V10

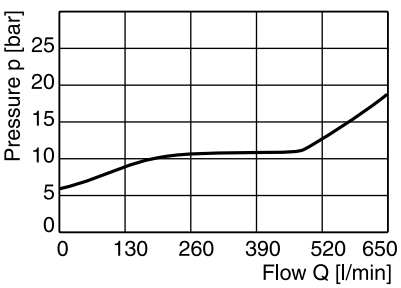

All characteristic curves measured with HLP46 at 50 °C.

[1)] The performance curves are measured with external drain.
For internal drain the tank pressure has to be added to curve.

Block diagram

Code 10V
6 + PE acc. EN 175201-804

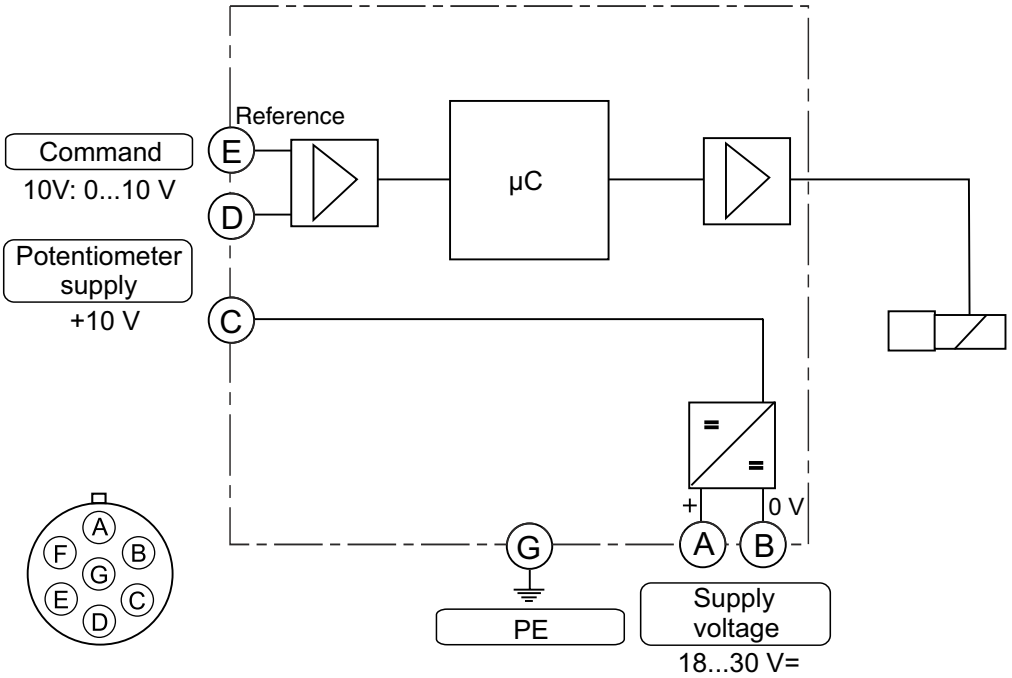

Code 4MA
6 + PE acc. EN 175201-804

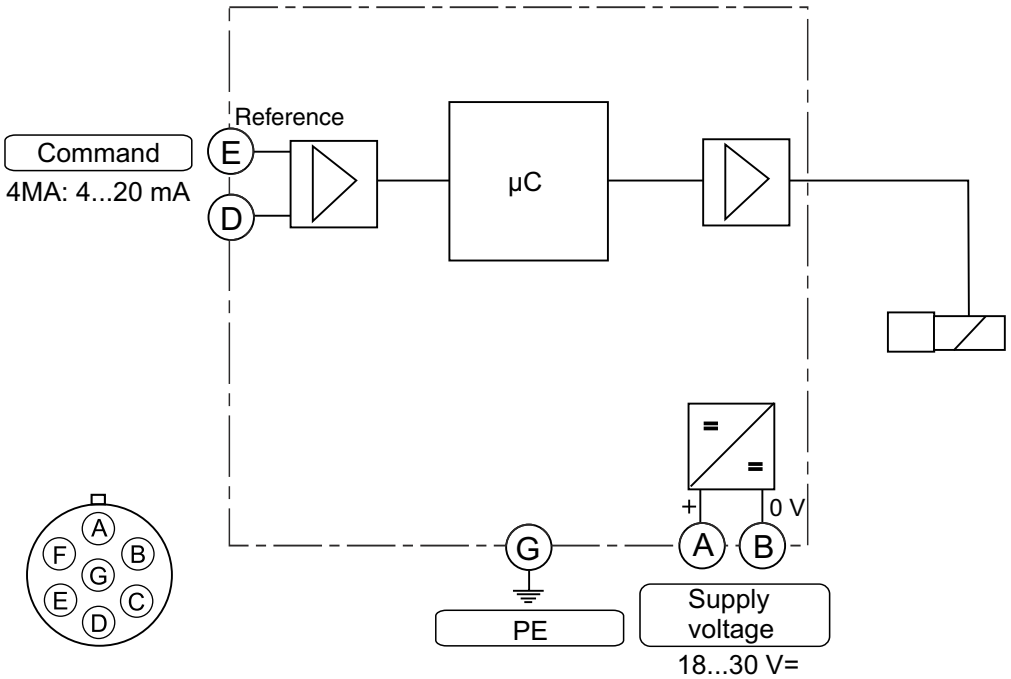

ProPxD interface program

The ProPxD software permits comfortable parameter setting for the module electronics. Via the clearly arranged entry mask the parameters can be noticed and modified. Storage of complete parameter sets is possible as well as printout or record as a text file for further documentation. Stored parameter sets may be loaded anytime and transmitted to other valves. Inside the electronics a non-volatile memory stores the data with the option for recalling or modification.

The PC software can be downloaded free of charge at www.parker.com/isde – see page “Support“ or directly at www.parker.com/propxd.

Features

- Comfortable editing of all parameters
- Depiction and documentation of parameter sets
- Storage and loading of optimized parameter adjustments
- Executable with all actual Windows® operating systems from Windows® XP upwards
- Plain communication between PC and electronics via serial interface RS232C

The parametrizing cable may be ordered under item no. 40982923.

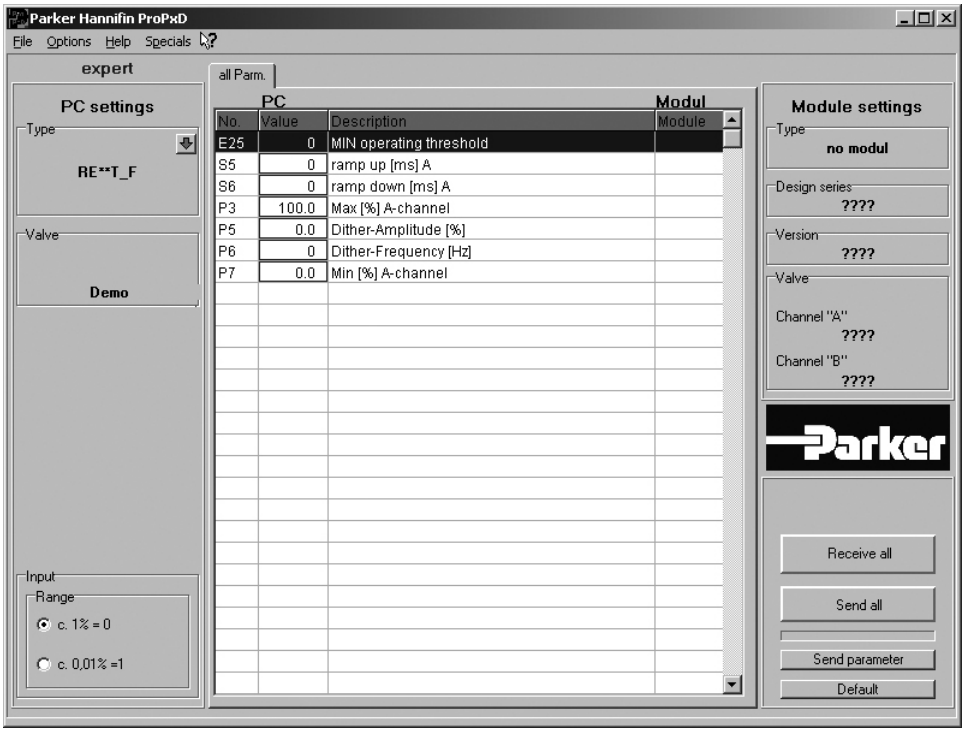

R4V

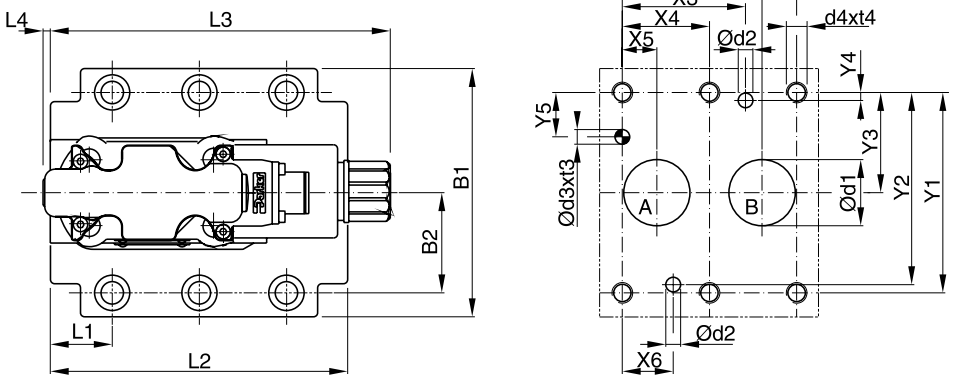

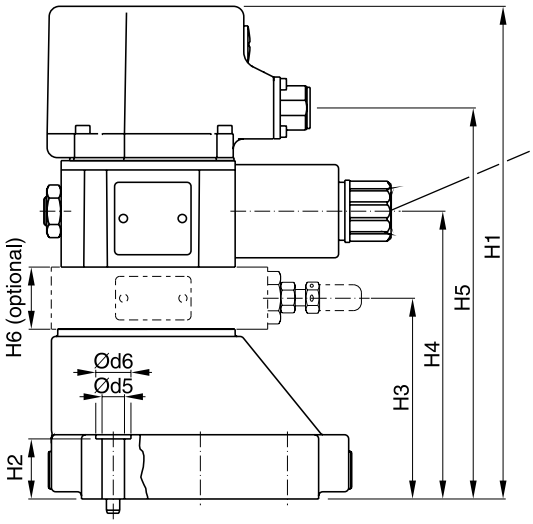

Important:
On initial start up and after long shut down periods bleed air from this plug.

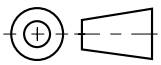

NG	ISO-code	x1	x2	x3	x4	x5	x6	x7	y1	y2	y3	y4	y5	y6
10	6264-06-07-*-97	42.9	35.8	21.5	–	7.2	21.5	0	66.7	58.8	33.4	7.9	14.3	–
25	6264-08-11-*-97	60.3	49.2	39.7	–	11.1	20.6	0	79.4	73	39.7	6.4	15.9	–
32	6264-10-15-*-97	84.2	67.5	59.5	42.1	16.7	24.6	0	96.8	92.8	48.4	3.8	21.4	–

Tolerance at X and Y pin holes and screw holes ±0.1, at port holes ±0.2.

NG	ISO-code	B1	B2	H1	H2	H3	H4	H5	H6	L1	L2	L3	L4	L5	L6
10	6264-06-07-*-97	87.3	33.35	204.7	21	62	103	148.2	32	25	90.8	164.2	4.5	–	–
25	6264-08-11-*-97	105	39.7	229.2	29	86.5	127.5	172.7	32	30.9	123	164.2	4.5	–	–
32	6264-10-15-*-97	120	48.4	241.7	30	99	140	185.2	32	29.8	143.5	164.2	4.5	–	–

NG	ISO-code	d1max	d2max	d3	t3	d4	t4	d5	d6	Subplate [1]
10	6264-06-07-*-97	15	7	7.1	8	M10	16	10.8	17	SPP 3M6B 910
25	6264-08-11-*-97	23.4	7.1	7.1	8	M10	18	10.8	17	SPP 6M8B 910
32	6264-10-15-*-97	32	7.1	7.1	8	M10	20	10.8	17	SPP 10M12B 910

NG	Bolt kit			Kit NBR	Kit FPM	Surface finish
10	BK505	4x M10x35 ISO 4762-12.9	63 Nm ±15 %	S26-58507-0 [2]	S26-58507-5 [2]	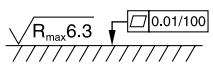
25	BK485	4x M10x45 ISO 4762-12.9	63 Nm ±15 %	S26-58475-0 [2]	S26-58475-5 [2]	
32	BK506	6x M10x45 ISO 4762-12.9	63 Nm ±15 %	S26-58508-0 [2]	S26-58508-5 [2]	
Prop. section P2				S26-58473-0	S26-58473-5	

[1] Details see chapter 12, series SPP.
[2] Please combine seal kit of one size with seal kit of Prop. section P2 for complete seal kit.

R6V

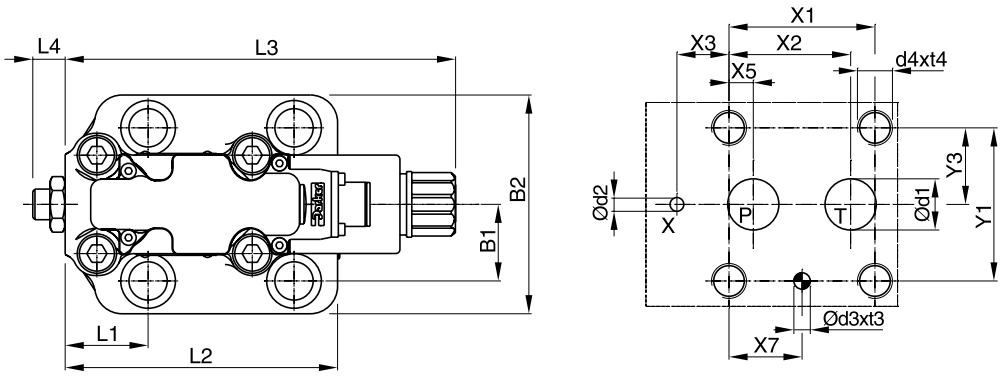

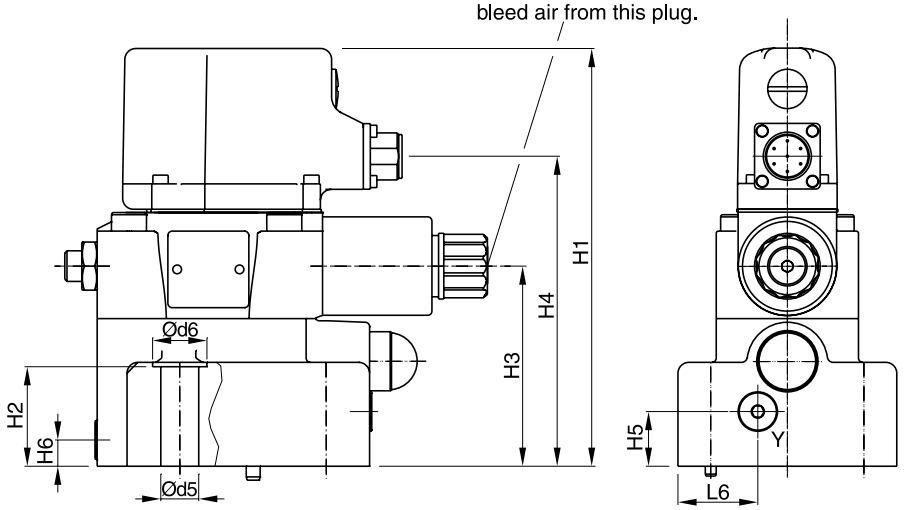

Y: external drain port G 1/8“

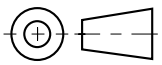

NG	ISO-code	x1	x2	x3	x4	x5	x6	x7	y1	y2	y3	y4	y5	y6
10	6264-06-09-*-97	53.8	47.5	0	–	22.1	–	22.1	53.8	–	26.9	–	–	–
25	6264-08-13-*-97	66.7	55.6	23.8	–	11.1	–	33.4	70	–	35	–	–	–
32	6264-10-17-*-97	88.9	76.2	31.8	–	12.7	–	44.5	82.6	–	41.3	–	–	–

Tolerance at X and Y pin holes and screw holes ±0.1, at port holes ±0.2.

NG	ISO-code	B1	B2	H1	H2	H3	H4	H5	H6	L1	L2	L3	L4	L5	L6
10	6264-06-09-*-97	80	26.9	187.2	27	88	138.2	20.5	25	52	117	182.3	14.4	–	29.5
25	6264-08-13-*-97	100	35	190.7	46.5	91.5	141.7	25	12	37.9	124.5	182.3	14.4	–	36.5
32	6264-10-17-*-97	120	41.3	197.7	51.3	98.5	148.7	26.5	13.5	44.3	153	182.3	14.4	–	46.5

NG	ISO-code	d1max	d2max	d3	t3	d4	t4	d5	d6	Subplate [1]
10	6264-06-09-*-97	14.7	4.8	7.5	10	M12	20	13.5	20	SPP 3R6B 910
25	6264-08-13-*-97	23.4	6.3	7.5	10	M16	27	17.5	25	SPP 6R10B 910
32	6264-10-17-*-97	32	6.3	7.5	10	M18	28	20	30	SPP 10R12B 910

NG	Bolt kit			Kit NBR	Kit FPM	Surface finish
10	BK494	4x M12x45 ISO 4762-12.9	108 Nm ±15 %	S26-98589-0	S26-98589-5	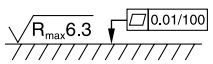
25	BK366	4x M16x70 ISO 4762-12.9	264 Nm ±15 %	S26-96396-0	S26-96396-5	
32	BK507	4x M18x75 ISO 4762-12.9	398 Nm ±15 %	S26-96392-0	S26-96392-5	

[1] Details see chapter 12, series SPP.

Pilot operated relief valve with proportional adjustment. Series VBY*K is a pilot operated pressure valve with external drain. Because of the high pressure capability of the outlet port the VBY can be used as sequence valve. In this case the external drain port Y has to be used.

The optimum performance can be achieved in combination with the digital amplifier module PCD00A-400.

Features

- Proportional adjustment
- Subplate mounting acc. to ISO 5781
- External drain
- Main stage spool type valve
- Pilot stage seated type valve



VBY*K06



VBY*K10

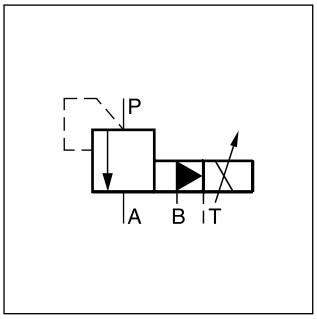

VBY*K06

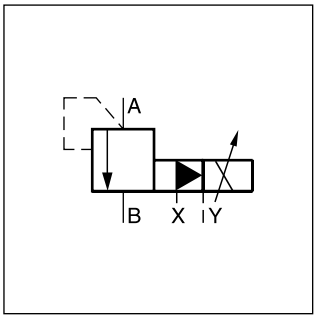

VBY*K10

VBY*K06

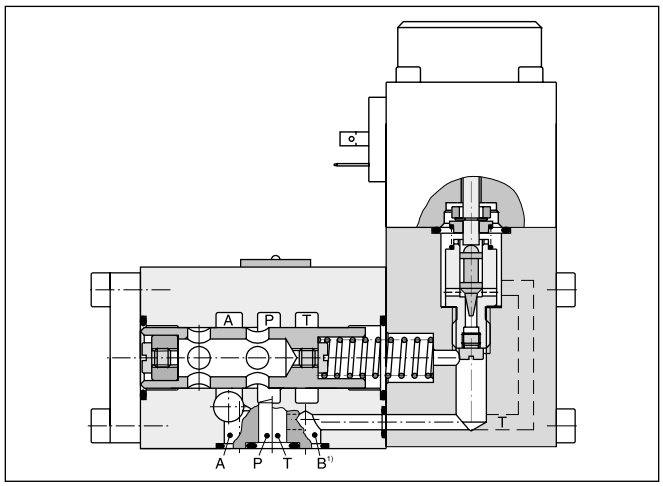

VBY*K10

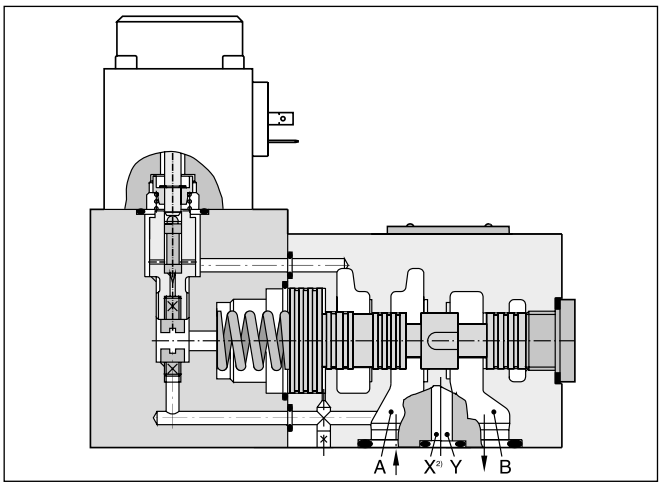

Ordering code

VBY		K			
Pressure relief valve	**Max. setting range**	**Proportional solenoid 9 VDC / 2.5 A**	**Nominal size**	**Seals**	**Design series** (not required for ordering)

Code	Max. setting range
064	**64 bar**
100	100 bar
160	**160 bar**
210	210 bar
315	315 bar

Code	Seals
N	**NBR**
V	FPM

Code	Nominal size
06	**NG06**
10	**NG10**

Bold letters =
Short-term availability

1) Port B for remote control, otherwise to be blocked.
2) Port X for remote control, otherwise to be blocked.

Technical data

General				
Design			Proportional pressure relief valve	
Nominal size			**NG06**	**NG10**
Interface			Subplate mounting according to ISO 5781	
Actuation			Proportional solenoid	
Mounting position			unrestricted	
Ambient temperature		[°C]	-20 ... +60	
$MTTF_D$ value		[years]	75	
Weight		[kg]	2.4	4.5
Hydraulics				
Max. operating pressure		[bar]	P, A: 315, Port B blocked, Port T depressurized	A, B: 315, Port Y blocked, Port Y depressurized
Nominal flow		[l/min]	40	160
Adjustment range		[bar]	up to 64, 100, 160, 210, 315	
Fluid			Hydraulic oil according to DIN 51524	
Viscosity	permitted	[cSt] / [mm²/s]	20 ... 400	
	recommended	[cSt] / [mm²/s]	30 ... 80	
Fluid temperature		[°C]	-20...+70 (NBR: -25...+70)	
Filtration			ISO 4406 (1999); 18/16/13	
Linearity		[%]	±3.5 at > 15 % pnom.	
Repeatability		[%]	<±2	
Hysteresis		[%]	<3	
Response time		[ms]	<150	<200
Electrical				
Duty ratio		[%]	100 ED	
Protection class			IP65 at EN 60529 (with correctly mounted plug-in connector)	
Nominal voltage		[VDC]	9	
Max. current		[A]	2.7	
Nom. current		[A]	2.5	
Ambient temperature		[°C]	-20...+70	
Coil resistance		[Ohm]	2.1 at 20 °C	
Solenoid connection			Connector as per EN 175301-803	
Power amplifier			PCD00A-400	

Characteristic pressure curves for NG06 p = f (U_{set})

Setting range max. 64 bar

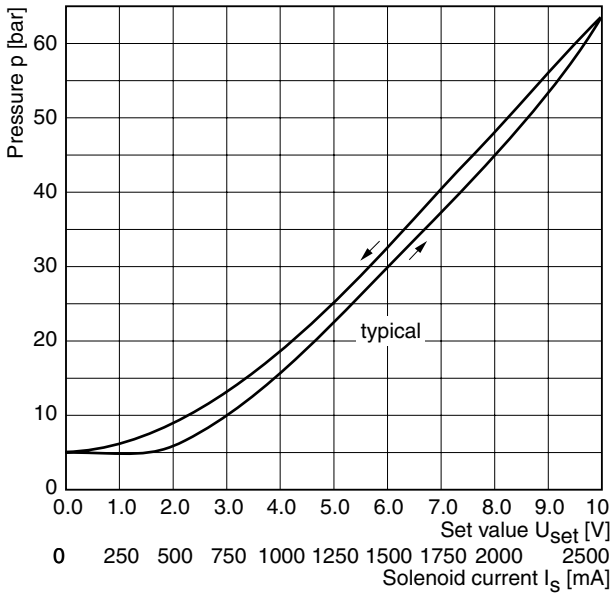

Setting range max. 210 bar

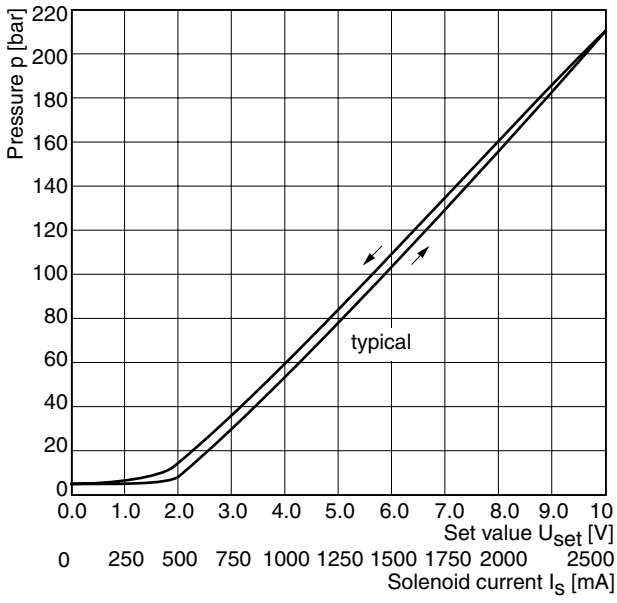

All characteristic curves measured with HLP46 at 50 °C.

NG06 p/Q characteristics

Setting range max. 64 bar

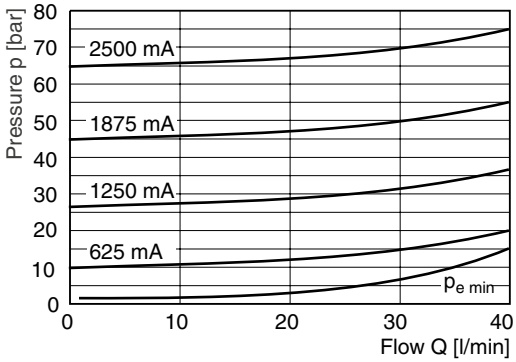

Setting range max. 100 bar

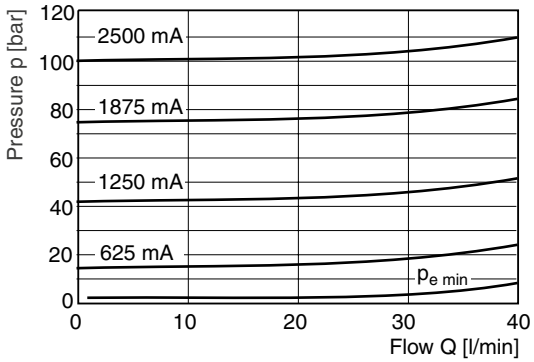

Setting range max. 160 bar

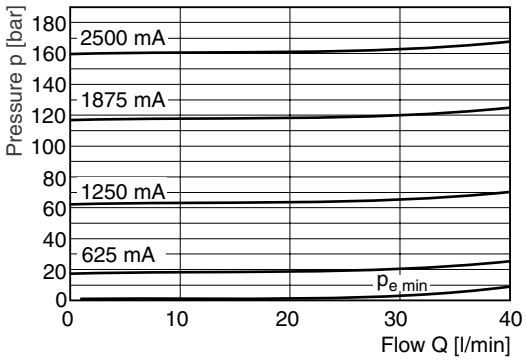

Setting range max. 210 bar

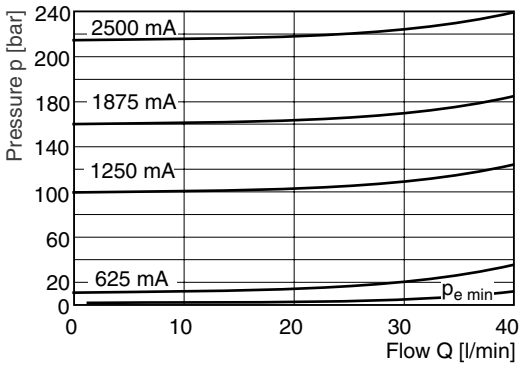

Setting range max. 315 bar

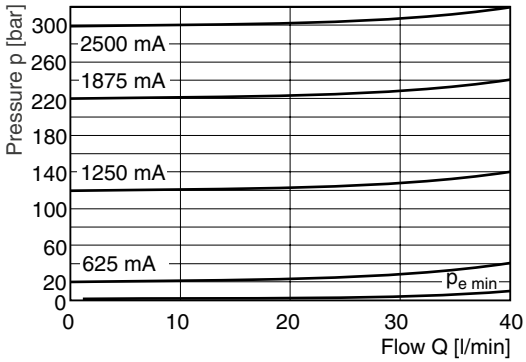

All characteristic curves measured with HLP46 at 50 °C.

4

4

NG06 step response signal, setting range max. 210 bar

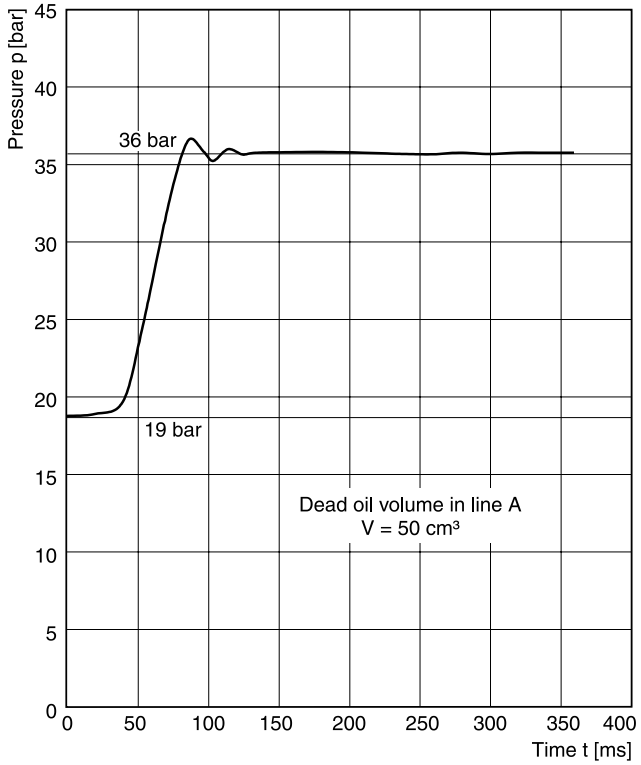

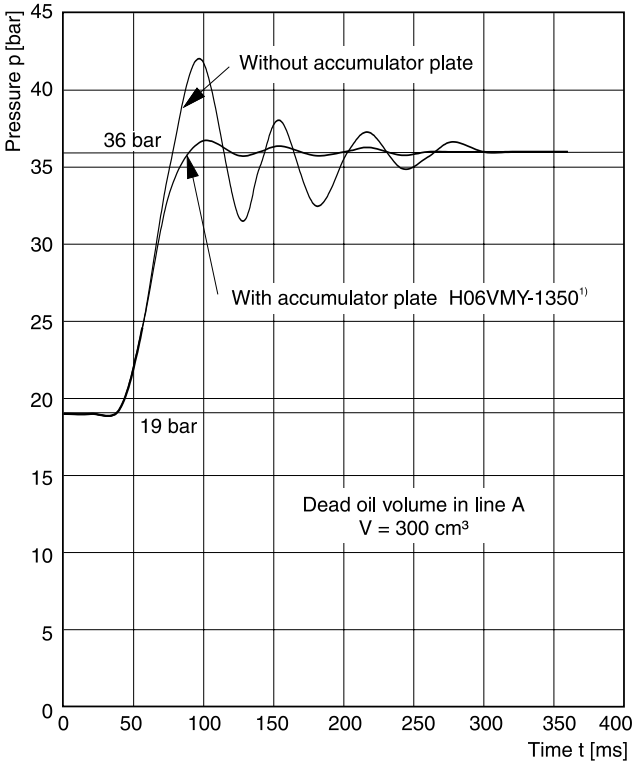

NG10 p/Q characteristics

Setting range max. 64 bar

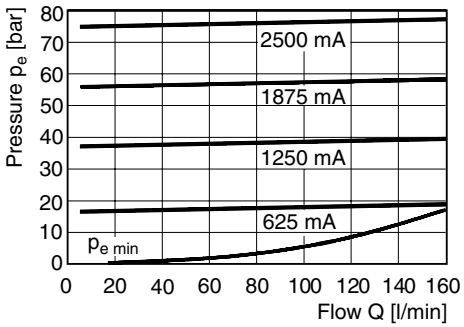

Setting range max. 100 bar

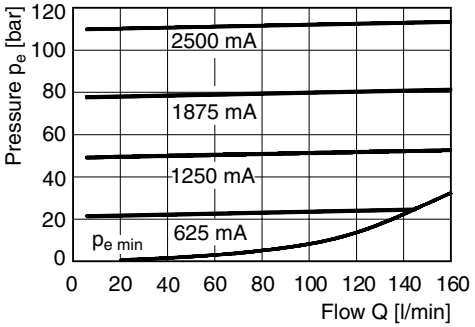

Setting range max. 160 bar

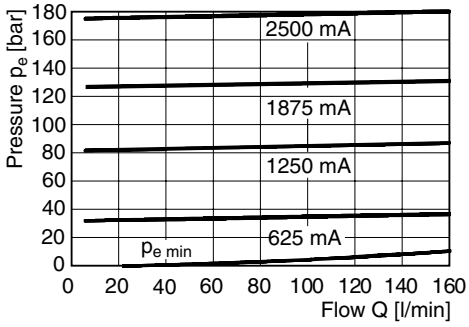

Setting range max. 210 bar

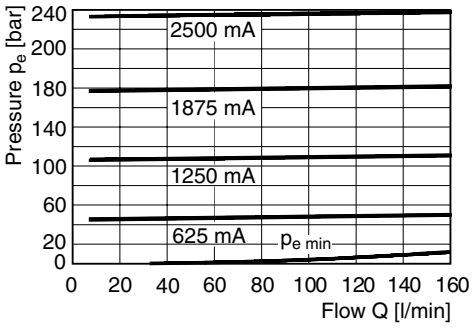

All characteristic curves measured with HLP46 at 50 °C.

[1)] See series VMY for details.

NG06

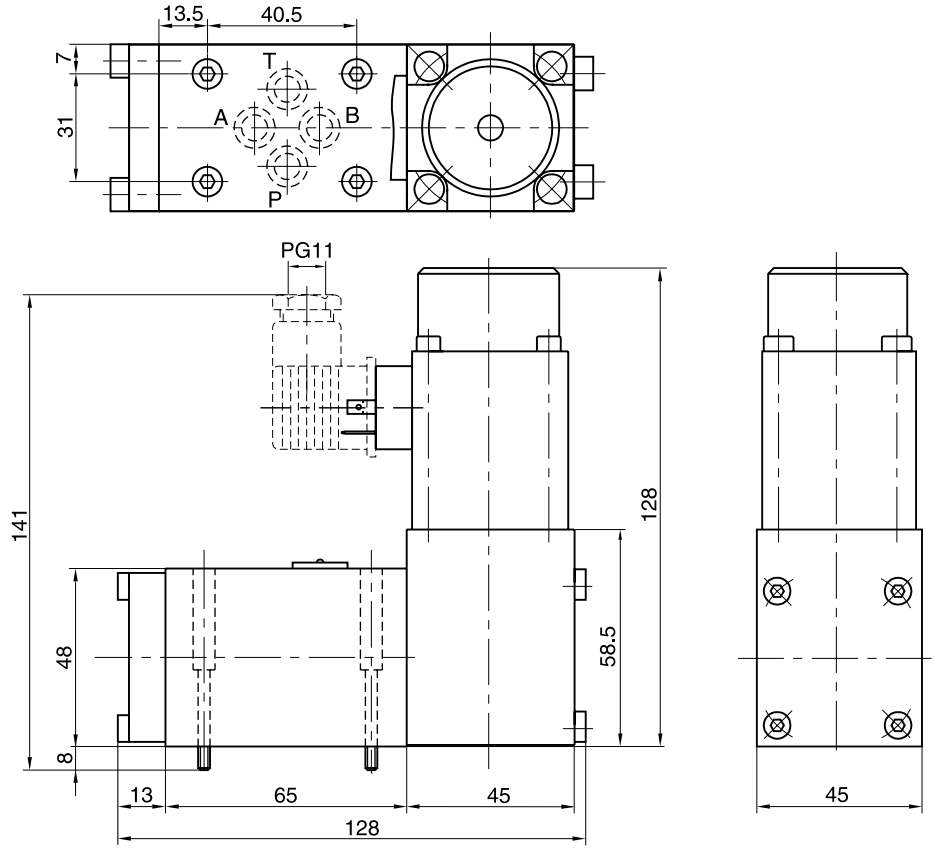

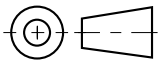

Surface finish	Bolt kit			Kit NBR	Kit FPM
$R_{max}6.3$ 0.01/100	BK375	4x M5x30 ISO 4762-12.9	7.6 Nm ±15 %	SK-VMY-L06-N	SK-VMY-L06-V

Mounting pattern ISO 5781-03-04-0-00

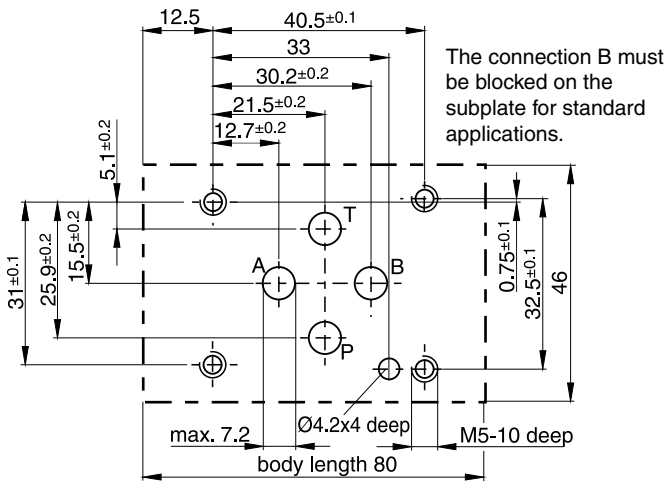

NG10

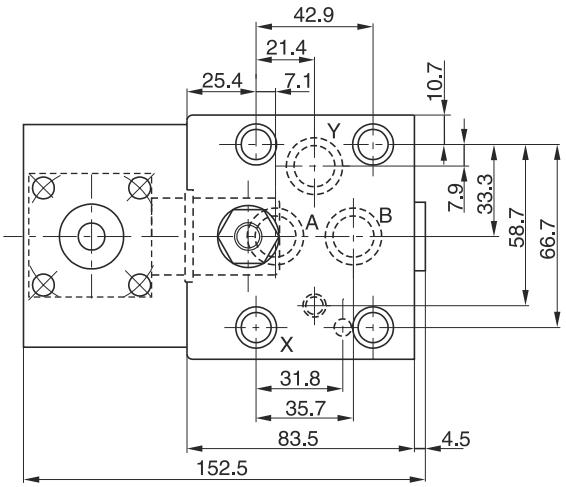

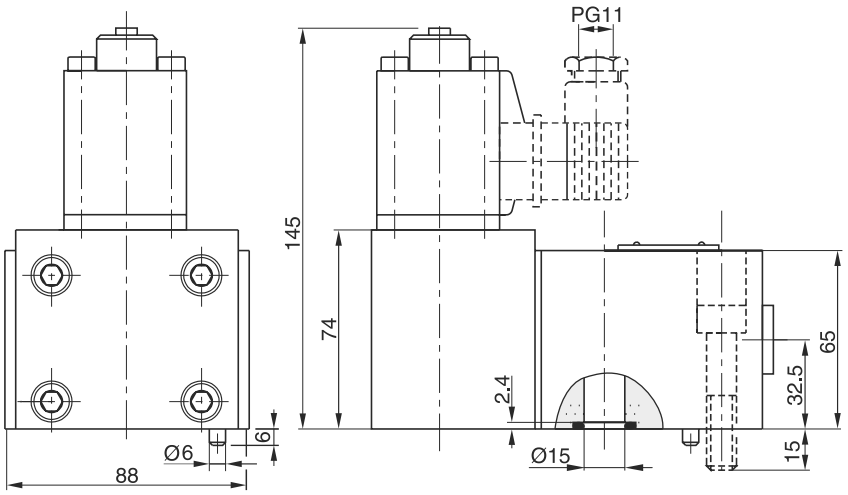

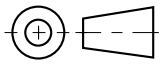

Surface finish	Bolt kit			Kit FPM
R_{max}6.3 ⏥ 0.01/100	BK389	4x M10x50 ISO 4762-12.9	63 Nm ±15 %	SK-VB/VM-A10V

Mounting pattern ISO 5781-06-07-0-00 [1)]

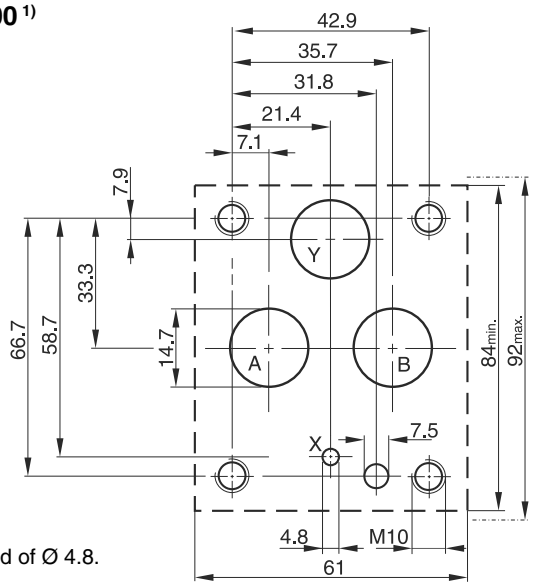

[1)] Deviating from ISO the Y port has Ø 14.7 instead of Ø 4.8.

Subplate mounted unloading valves series R4U are used to unload a circuit at low pressure. The mechanically adjustable pressure signal to unload the main stage has to be applied to port X. The pressure differential between opening and closing is nominal 15 or 28 % of the setting pressure:

28 % for pressure stages 105 and 210 bar

15 % for pressure stage 350 bar

Typical applications are unloading of pumps in an accumulator circuit or unloading of the low pressure stage of a double pump.

The R4U is available with an electrical vent valve for unpressurized circulation.

Features

- Pilot operated unloading valve
- Interface
  - subplate mounting to ISO 5781
- 3 pressure stages
- 2 vent valve functions
- 3 adjustment modes:
  - hand knob
  - acorn nut with lead seal
  - cylinder lock





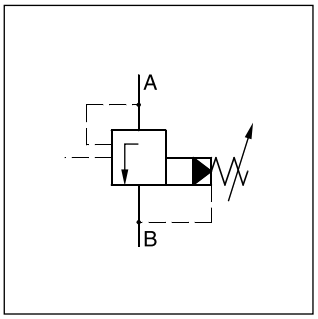

R4U

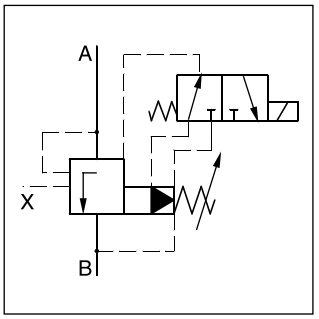

R4U with vent function

R4U06

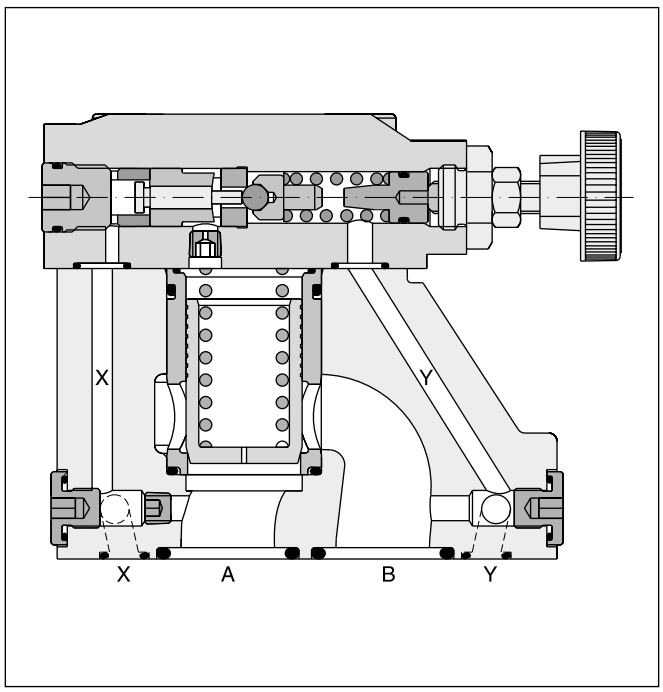

R4U06 with vent function

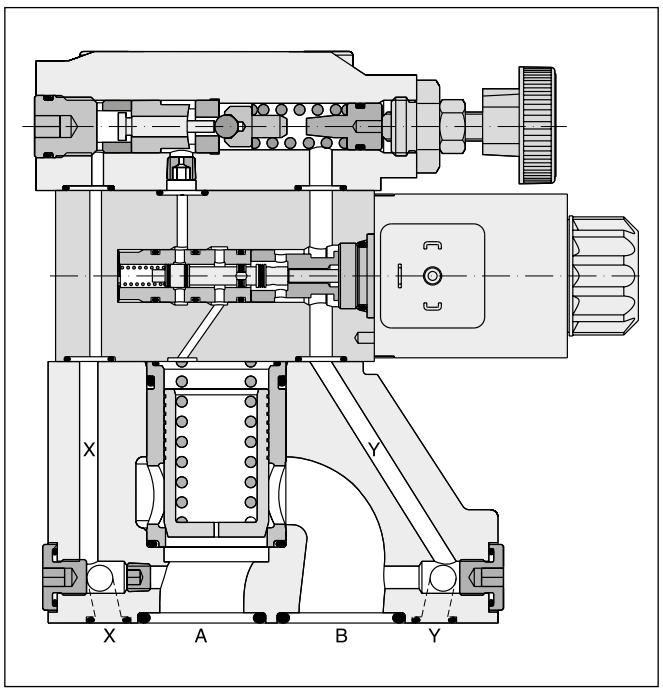

R4U

R	4	U		–	5	3				A		
Pressure valve	Interface	Unloading function	Nominal size		Max. pressure (350 bar)	Body design	Pressure stages	Adjust-ment	Pilot oil	Design series	Seals	Modifi-cations

Code	Interface	
4	Subplate mounting ISO 5781	NG10 and 25 / NG32 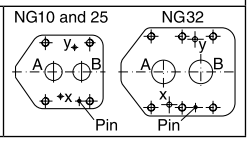

Code	Nominal size
03	NG10
06	NG25
10	NG32

Code	Pressure stages	Pressure differential
1	up to 105 bar	28 %
3	up to 210 bar	28 %
5	up to 350 bar	15 %

Code	Seals
1	NBR
5	FPM

Pilot oil	
Code	Drain line
0	Internal
1	Ext. from subplate

Code	Adjustment
1	Hand knob 32 mm diameter (standard)
3	Acorn nut with lead seal
4	Cylinder lock

R4U with vent function

R	4	U		–	5	3						A		
Pressure valve	Interface	Relief function	Nominal size		Max. pressure (350 bar)	Body design	Pressure stages	Adjust-ment	Pilot oil	Vent valve function	Solenoid voltage	Design series	Seals	Modifi-cations

Code	Interface	
4	Subplate mounting ISO 5781	NG10 and 25 / NG32 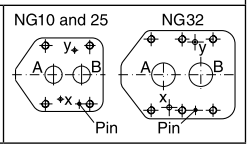

Code	Nominal size
03	NG10
06	NG25
10	NG32

Code	Pressure stages	Pressure differential
1	up to 105 bar	28 %
3	up to 210 bar	28 %
5	up to 350 bar	15 %

Code	Adjustment
1	Hand knob (standard)
3	Acorn nut with lead seal
4	Cylinder lock

Code	Seals
1	NBR
5	FPM

Code	Voltage
G0R	12 V =
G0Q	24 V =
GAR[1)]	98 V =
GAG[1)]	205 V =
W30	110 V / 50 Hz 120 V / 60 Hz
W31	230 V / 50 Hz 240 V / 60 Hz

Code	Vent valve
09	Solenoid not activ. unpress. circulation
11	Solenoid activated unpress. circulation

Pilot oil	
Code	Drain line
0	Internal
1	Ext. from subplate

[1)] To be used in combination with rectifier plugs at 120 VAC resp. 230 VAC power supply.

R4U

General				
Nominal size		**NG10**	**NG25**	**NG32**
Interface		Subplate mounting acc. ISO 5781		
Mounting position		Unrestricted, horizontal mounting preferred		
Ambient temperature	[°C]	-20...+60		
$MTTF_D$ value	[years]	75		
Weight	[kg]	2.7	4.5	6.0
Hydraulic				
Max. operating pressure	[bar]	Ports A and X 350, Ports B and Y depressurized		
Pressure stages	[bar]	105, 210, 350		
Pressure differential		28 % (for pressure stages 105 bar and 210 bar); 15 % (for pressure stages 350 bar)		
Nominal flow	[l/min]	150	350	650
Fluid		Hydraulic oil according to DIN 51524		
Viscosity, permitted	[cSt] / [mm²/s]	20 ... 400		
recommended	[cSt] / [mm²/s]	30 ... 80		
Fluid temperature	[°C]	-20...+70 (NBR: -25...+70)		
Filtration		ISO 4406 (1999); 18/16/13		

4

R4U with vent function

General							
Nominal size		**NG10**		**NG25**		**NG32**	
Interface		Subplate mounting acc. ISO 5781					
Mounting position		Unrestricted, horizontal mounting preferred					
Ambient temperature	[°C]	-20...+60					
$MTTF_D$ value	[years]	75					
Weight	[kg]	4.4		6.2		7.7	
Hydraulic							
Max. operating pressure	[bar]	Ports A and X 350, Ports B and Y depressurized					
Pressure stages	[bar]	105, 210, 350					
Pressure differential		28 % (for pressure stages 105 bar and 210 bar); 15 % (for pressure stages 350 bar)					
Nominal flow	[l/min]	150		350		650	
Fluid		Hydraulic oil according to DIN 51524					
Viscosity, permitted	[cSt]/ [mm²/s]	20 ... 400					
recommended	[cSt]/ [mm²/s]	30 ... 80					
Fluid temperature	[°C]	-20...+70 (NBR: -25...+70)					
Filtration		ISO 4406 (1999); 18/16/13					
Electrical (solenoid)							
Duty ratio	[%]	100 ED; CAUTION: coil temperature up to 150 °C possible					
Protection class		IP65 in according with EN 60529 (with correctly mounted plug-in connector)					
	Code	G0R	G0Q	GAR	GAG	W30	W31
Supply voltage	[V]	12 V =	24 V =	98 V =	205 V =	110 V / 50 Hz 120 V / 60 Hz	230 V / 50 Hz 240 V / 60 Hz
Tolerance supply voltage	[%]	±10	±10	±10	±10	±5	±5
Current consumption hold	[A]	2.72	1.29	0.33	0.13	0.6 / 0.55	0.3 / 0.27
in rush	[A]	2.72	1.29	0.33	0.13	2.5 / 2.4	1.25 / 1.2
Power consumption hold	[W]	32.7	31	31.9	28.2	70 / 70 VA	70 / 70 VA
in rush	[W]	32.7	31	31.9	28.2	280 / 290 VA	280 / 290 VA
Solenoid connection		Connector as per EN175301-803, solenoid identification as per ISO 9461					
Wiring min.	[mm²]	3 x 1.5 recommended					
Wiring length max.	[m]	50 recommended					

p/Q performance curve [1)]

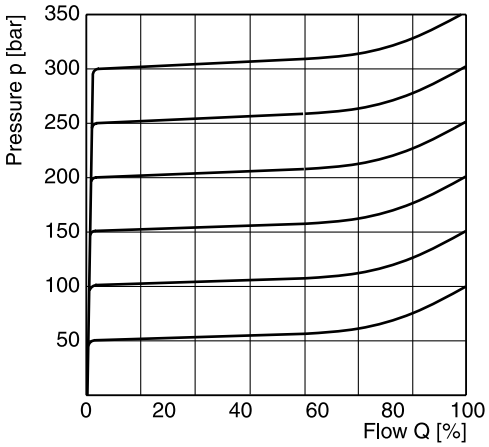

Minimum pressure curve

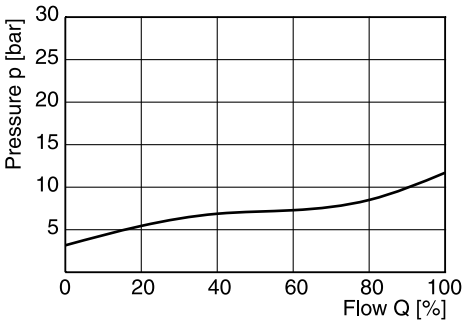

All characteristic curves measured with HLP46 at 50 °C.

[1)] The performance curves are measured with external drain.
For internal drain the tank pressure has to be added to curve.

R4U

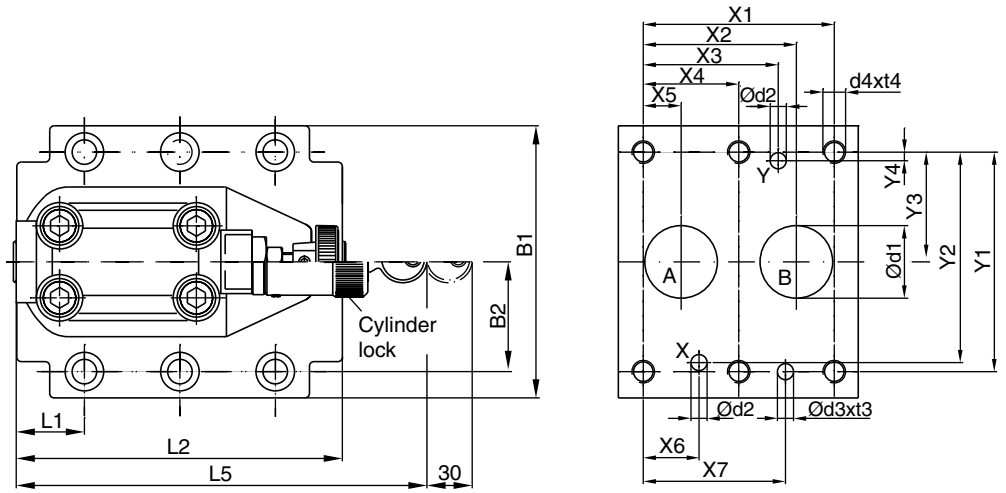

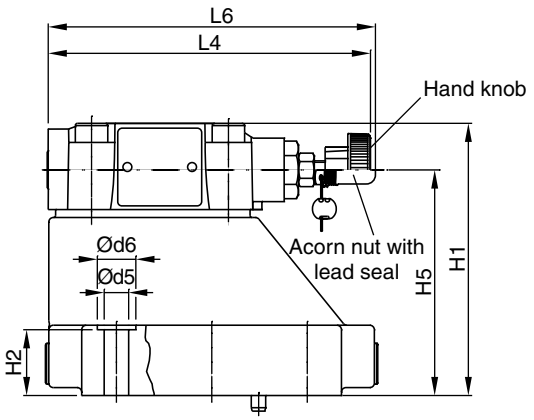

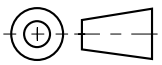

NG	ISO-code	x1	x2	x3	x4	x5	x6	x7	y1	y2	y3	y4	y5	y6
10	5781-06-07-0-00	42.9	35.8	21.5	–	7.2	21.5	31.8	66.7	58.8	33.4	7.9	–	–
25	5781-08-10-0-00	60.3	49.2	39.7	–	11.1	20.6	44.5	79.4	73	39.7	6.4	–	–
32	5781-10-13-0-00	84.2	67.5	59.5	42.1	16.7	24.6	62.7	96.8	92.8	48.4	3.8	–	–

Tolerance at X and Y pin holes and screw holes ±0.1, at port holes ±0.2.

NG	ISO-code	B1	B2	H1	H2	H3	H4	H5	H6	L1	L2	L3	L4	L5	L6
10	5781-06-07-0-00	87.3	33.35	83	21	–	–	62.5	–	25	90.8	–	143	181	144.8
25	5781-08-10-0-00	105	39.7	107.5	29	–	–	87	–	30.9	123	–	143	181	144.8
32	5781-10-13-0-00	120	48.4	120	30	–	–	99.5	–	29.8	143.5	–	143	181	144.8

NG	ISO-code	d1max	d2max	d3	t3	d4	t4	d5	d6	Subplate [1]
10	5781-06-07-0-00	15	7	7.1	8	M10	16	10.8	17	SPP 3M6B 910
25	5781-08-10-0-00	23.4	7.1	7.1	8	M10	18	10.8	17	SPP 6M8B 910
32	5781-10-13-0-00	32	7.1	7.1	8	M10	20	10.8	17	SPP 10M12B 910

NG	Bolt kit			Kit NBR	Kit FPM	Surface finish
10	BK505	4x M10x35 ISO 4762-12.9	63 Nm ±15 %	S26-58507-0	S26-58507-5	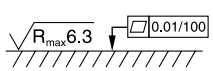
25	BK485	4x M10x45 ISO 4762-12.9	63 Nm ±15 %	S26-58475-0	S26-58475-5	
32	BK506	6x M10x45 ISO 4762-12.9	63 Nm ±15 %	S26-58508-0	S26-58508-5	

[1] Details see chapter 12, series SPP.

4

R4U with vent function

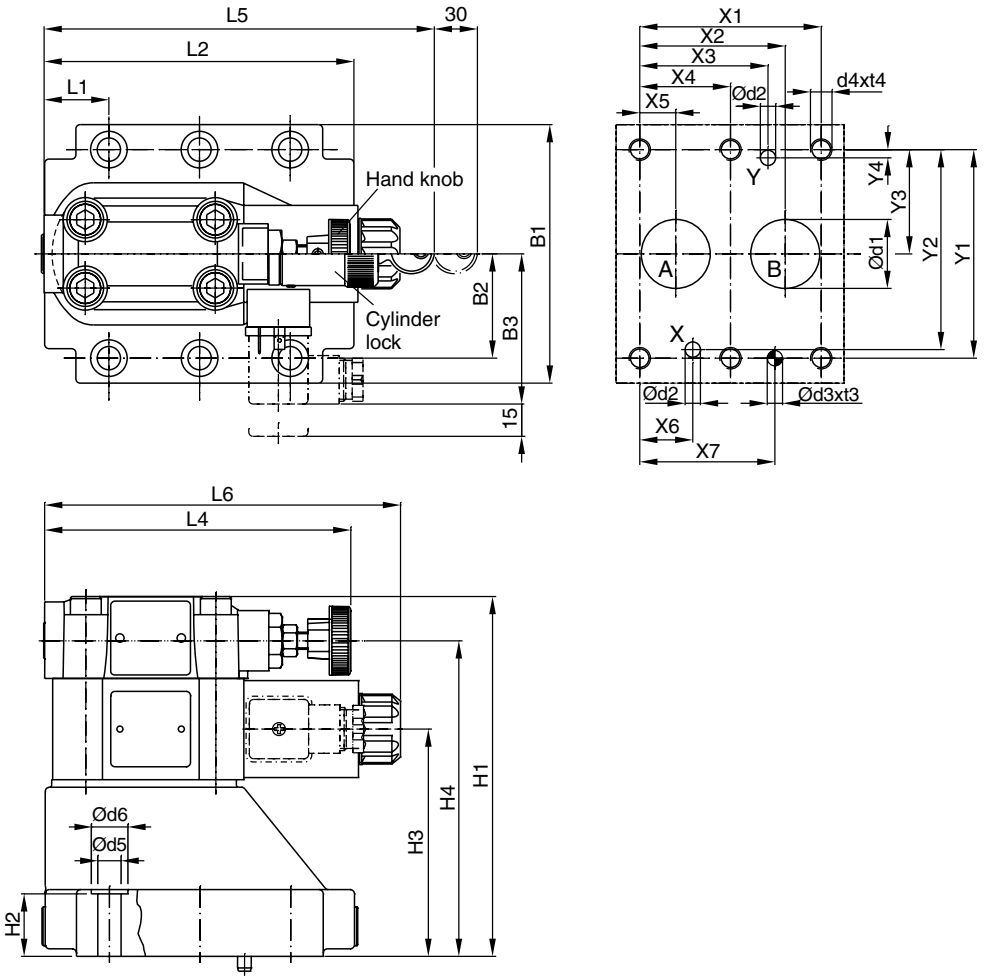

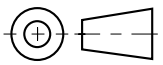

NG	ISO-code	x1	x2	x3	x4	x5	x6	x7	y1	y2	y3	y4	y5	y6
10	5781-06-07-0-00	42.9	35.8	21.5	–	7.2	21.5	31.8	66.7	58.8	33.4	7.9	–	–
25	5781-08-10-0-00	60.3	49.2	39.7	–	11.1	20.6	44.5	79.4	73	39.7	6.4	–	–
32	5781-10-13-0-00	84.2	67.5	59.5	42.1	16.7	24.6	62.7	96.8	92.8	48.4	3.8	–	–

Tolerance at X and Y pin holes and screw holes ±0.1, at port holes ±0.2.

NG	ISO-code	B1	B2	B3	H1	H2	H3	H4	H5	H6	L1	L2	L3	L4	L5	L6
10	5781-06-07-0-00	87.3	33.35	70	130	21	68.5	109.5	–	–	25	90.8	–	143	181	165.6
25	5781-08-10-0-00	105	39.7	70	154.5	29	93	134	–	–	30.9	123	–	143	181	165.6
32	5781-10-13-0-00	120	48.4	70	167	30	105.5	146.5	–	–	29.8	143.5	–	143	181	165.6

NG	ISO-code	d1max	d2max	d3	t3	d4	t4	d5	d6	Subplate [1]
10	5781-06-07-0-00	15	7	7.1	8	M10	16	10.8	17	SPP 3M6B 910
25	5781-08-10-0-00	23.4	7.1	7.1	8	M10	18	10.8	17	SPP 6M8B 910
32	5781-10-13-0-00	32	7.1	7.1	8	M10	20	10.8	17	SPP 10M12B 910

NG	Bolt kit			Kit NBR	Kit FPM	Surface finish
10	BK505	4x M10x35 ISO 4762-12.9	63 Nm ±15 %	S26-58507-0 [2]	S26-58507-5 [2]	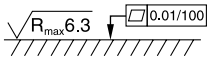
25	BK485	4x M10x45 ISO 4762-12.9	63 Nm ±15 %	S26-58475-0 [2]	S26-58475-5 [2]	
32	BK506	6x M10x45 ISO 4762-12.9	63 Nm ±15 %	S26-58508-0 [2]	S26-58508-5 [2]	
VV01, AC solenoid				S26-35237-0	S26-35237-5	
VV01, DC solenoid				S56-40609-0	S56-40609-5	

[1] Details see chapter 12, series SPP.

[2] Please combine seal kit of one size with seal kit of VV01 DC / AC solenoid for complete seal kit.

Subplate mounted sequence valves series R4S enable a hydraulic system to operate in a pressure sequence. When the system pressure reaches the setting pressure the valve opens and permits flow to the secondary sub-system.



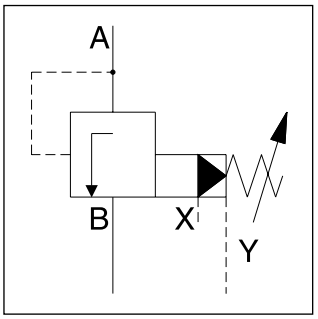

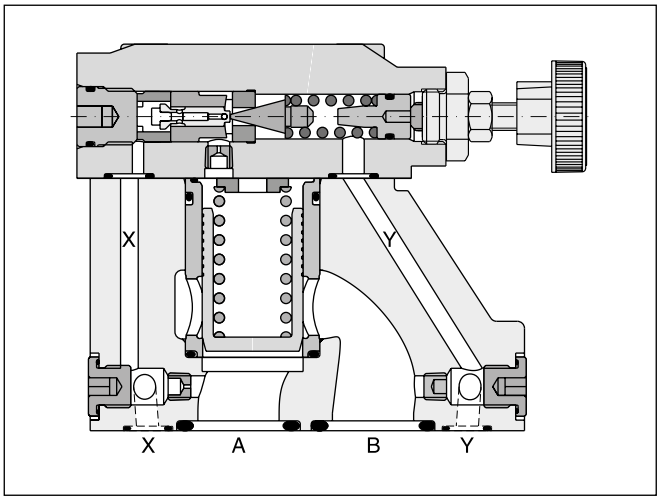

Features

- Pilot operated sequence valve
- Subplate mounting acc. to ISO 5781
- 3 pressure stages
- 3 adjustment modes:
  - hand knob
  - acorn nut with lead seal
  - cylinder lock

4

Ordering code

R	4	S	☐	–	5	3	☐	☐	1	A	☐
Pressure valve	Interface	Relief function	Nominal size		Max. pressure (350 bar)	Body design	Pressure stages	Adjust-ment	External drain from subplate	Design series	Seals

Code	Interface	
4	Subplate mounting ISO 5781	NG10 and 25 / NG32 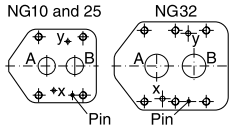

Code	Seals
1	NBR
5	FPM

Code	Nominal size
03	NG10
06	NG25
10	NG32

Code	Adjustment
1	Hand knob 32 mm diameter (standard)
3	Acorn nut with lead seal
4	Cylinder lock

Code	Pressure stages
1	up to 105 bar
3	up to 210 bar
5	up to 350 bar

Technical data

General				
Nominal size		**NG10**	**NG25**	**NG32**
Interface		Subplate mounting acc. ISO 5781		
Mounting position		Unrestricted, horizontal mounting preferred		
Ambient temperature	[°C]	-20...+60		
$MTTF_D$ value	[years]	75		
Weight	[kg]	2.7	4.5	6.0
Hydraulic				
Max. operating pressure	[bar]	Ports A, B and X 350, port Y depressurized		
Pressure stages	[bar]	105, 210, 350		
Nominal flow	[l/min]	150	350	650
Fluid		Hydraulic oil according to DIN 51524		
Viscosity, permitted recommended	[cSt] / [mm²/s] [cSt] / [mm²/s]	20 ... 400 30 ... 80		
Fluid temperature	[°C]	-20...+70 (NBR: -25...+70)		
Filtration		ISO 4406 (1999); 18/16/13		

4

Typical pressure characteristics at closing point

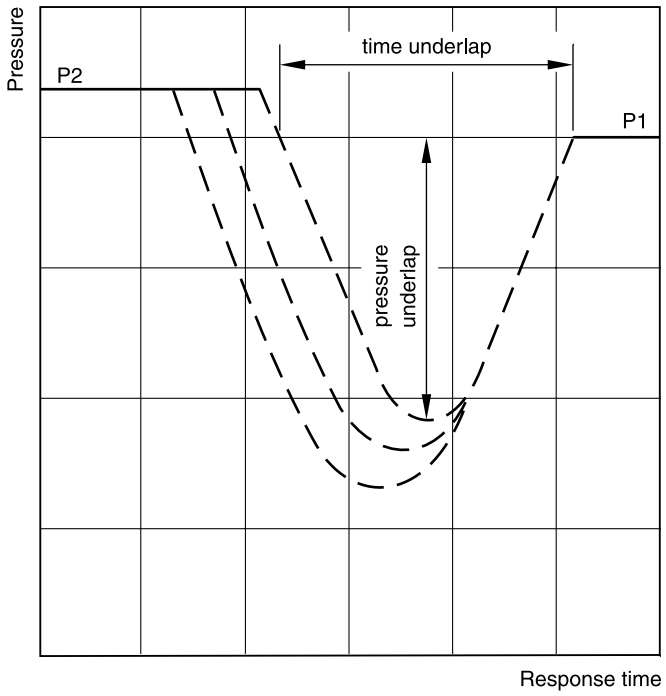

P1 = setting pressure

P2 = operating pressure

Time and pressure underlap depend on the characteristics of the specific system.

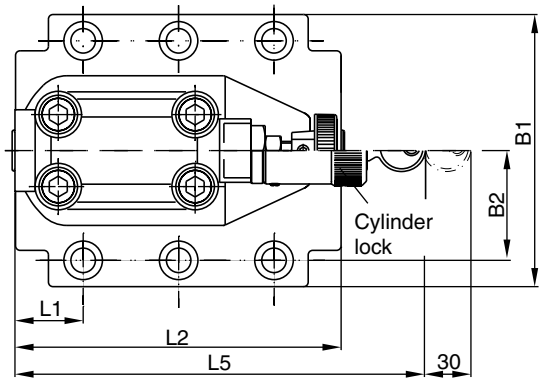

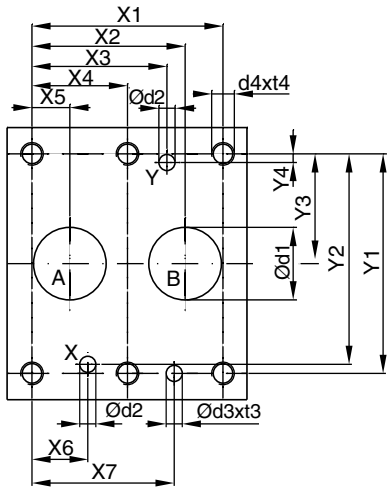

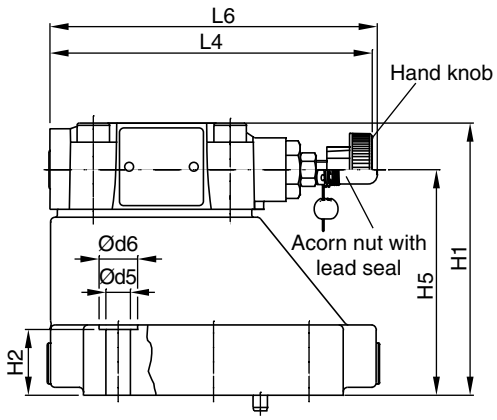

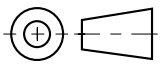

NG	ISO-code	x1	x2	x3	x4	x5	x6	x7	y1	y2	y3	y4	y5	y6
10	5781-06-07-0-00	42.9	35.8	21.5	–	7.2	21.5	31.8	66.7	58.8	33.4	7.9	–	–
25	5781-08-10-0-00	60.3	49.2	39.7	–	11.1	20.6	44.5	79.4	73	39.7	6.4	–	–
32	5781-10-13-0-00	84.2	67.5	59.5	42.1	16.7	24.6	62.7	96.8	92.8	48.4	3.8	–	–

Tolerance at X and Y pin holes and screw holes ±0.1, at port holes ±0.2.

NG	ISO-code	B1	B2	H1	H2	H3	H4	H5	H6	L1	L2	L3	L4	L5	L6
10	5781-06-07-0-00	87.3	33.35	83	21	–	–	62.5	–	25	90.8	–	143	181	144.8
25	5781-08-10-0-00	105	39.7	107.5	29	–	–	87	–	30.9	123	–	143	181	144.8
32	5781-10-13-0-00	120	48.4	120	30	–	–	99.5	–	29.8	143.5	–	143	181	144.8

NG	ISO-code	d1max	d2max	d3	t3	d4	t4	d5	d6	Subplate [1]
10	5781-06-07-0-00	15	7	7.1	8	M10	16	10.8	17	SPP 3M6B 910
25	5781-08-10-0-00	23.4	7.1	7.1	8	M10	18	10.8	17	SPP 6M8B 910
32	5781-10-13-0-00	32	7.1	7.1	8	M10	20	10.8	17	SPP 10M12B 910

NG	Bolt kit			Kit NBR	Kit FPM	Surface finish
10	BK505	4x M10x35 ISO 4762-12.9	63 Nm ±15 %	S26-58507-0	S26-58507-5	R_{max}6.3 ⏥ 0.01/100
25	BK485	4x M10x45 ISO 4762-12.9	63 Nm ±15 %	S26-58475-0	S26-58475-5	
32	BK506	6x M10x45 ISO 4762-12.9	63 Nm ±15 %	S26-58508-0	S26-58508-5	

[1] Details see chapter 12, series SPP.

Direct operated pressure reducing valve with manual adjustment. Series VM is a direct operated, spring loaded 3-way pressure reducing valve, that is open in neutral position. The valve closes the connection when the pre-set pressure is exceeded.

Primary port: NG06 - P, NG10 - B
Secondary port: NG06 - A, NG10 - A
Tank port: NG06 - T, NG10 - Y

If the pressure increases due to an external influence the spool opens to port T until the pre-set pressure is reached.


NG06


NG10

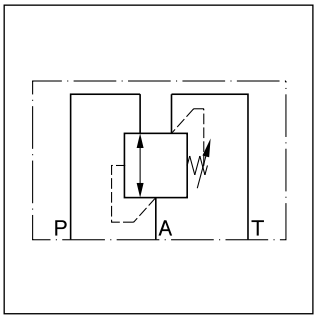

NG06

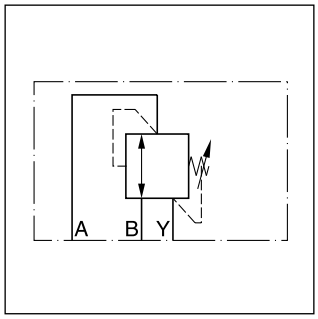

NG10

4

Features

- Spool type valve
- Subplate mounting acc. to ISO 5781
- 5 pressure stages at NG06
- 3 pressure stages at NG10
- 2 adjustment modes

NG06

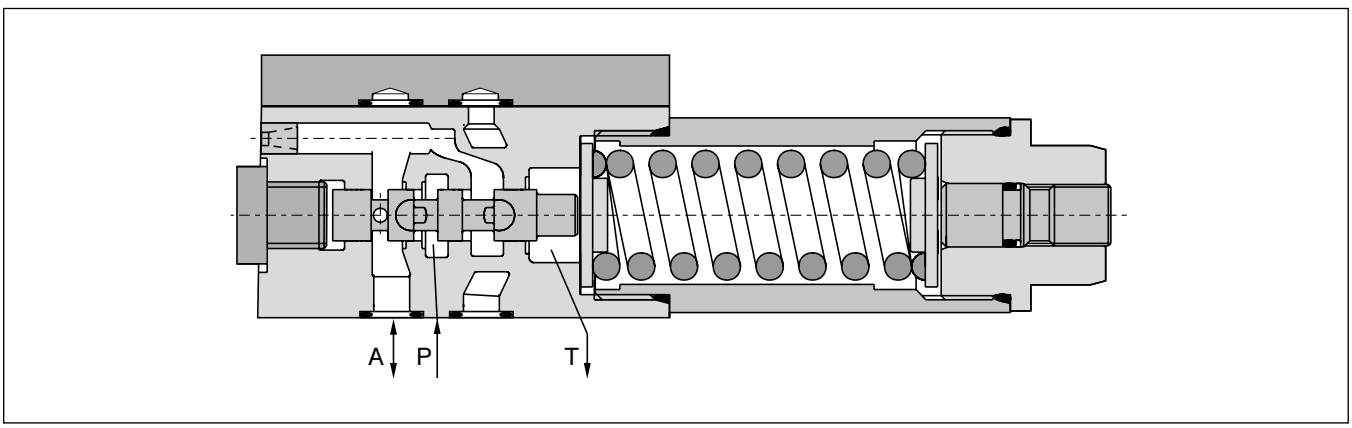

NG10

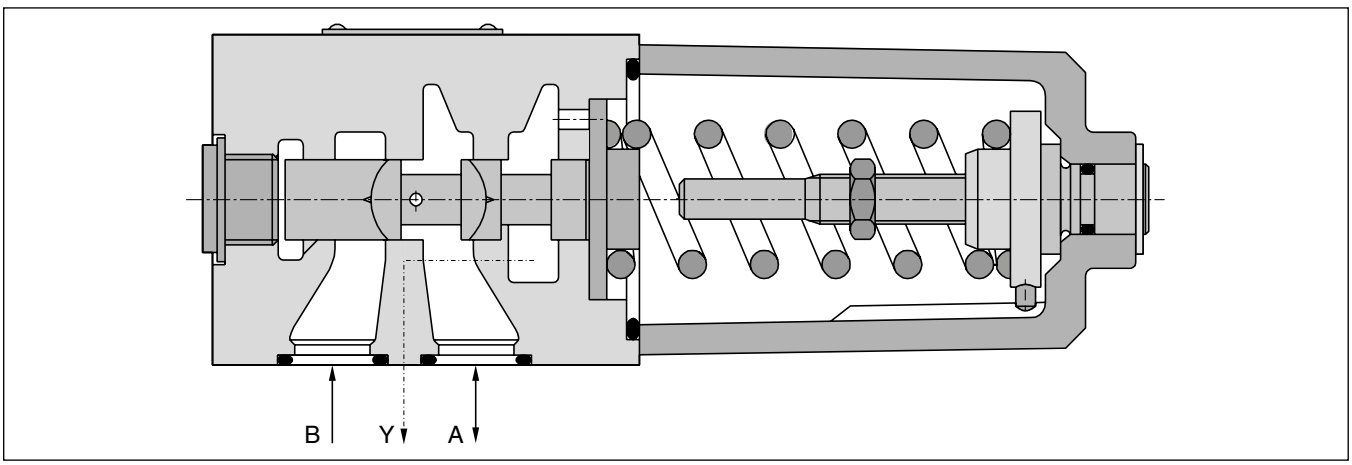

Ordering code

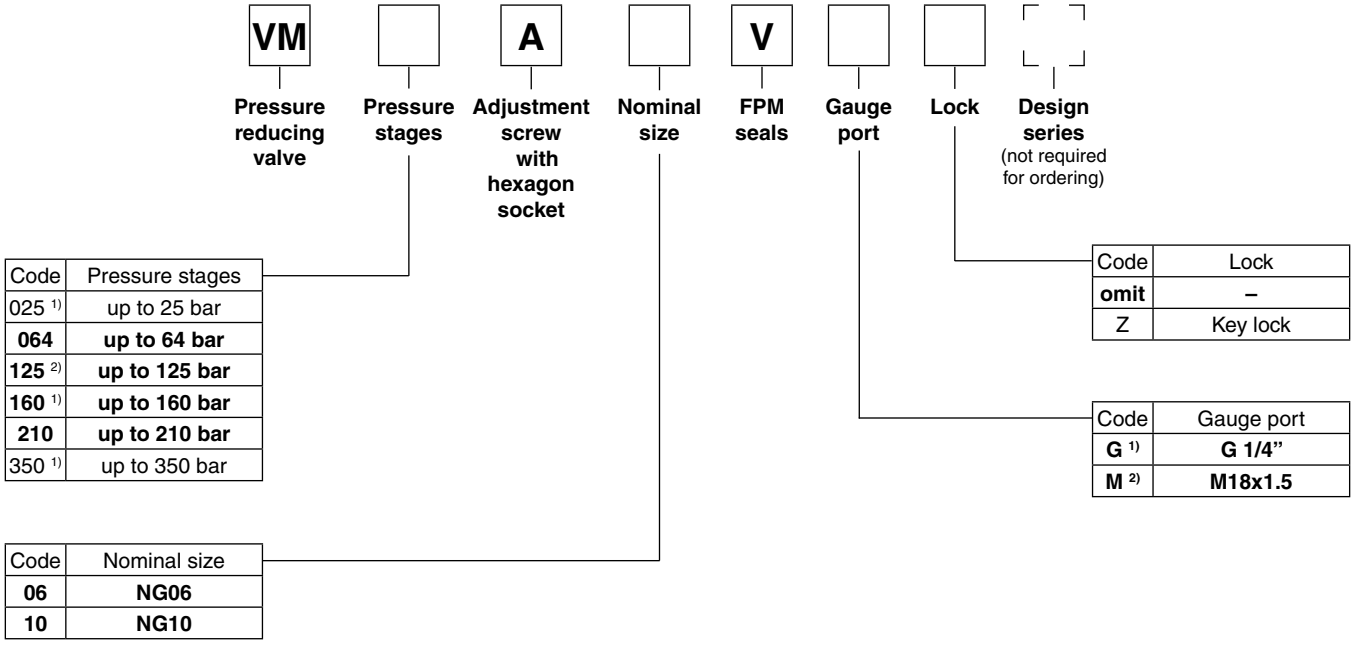

Code	Pressure stages
025 [1]	up to 25 bar
064	**up to 64 bar**
125 [2]	**up to 125 bar**
160 [1]	**up to 160 bar**
210	**up to 210 bar**
350 [1]	up to 350 bar

Code	Lock
omit	**–**
Z	Key lock

Code	Gauge port
G [1]	**G 1/4”**
M [2]	**M18x1.5**

Code	Nominal size
06	**NG06**
10	**NG10**

Bold letters =
Short-term availability

[1] Only NG06.
[2] Only NG10.

Technical data

General			
Design		Pressure reducing valve, direct operated, spool type	
Nominal size		**NG06 (CETOP 03 / NFPA D03)**	**NG10 (CETOP 05 / NFPA D05)**
Interface		Subplate mounting according to ISO 5781	
Mounting position		unrestricted	
Ambient temperature	[°C]	-20...+60	
$MTTF_D$ value	[years]	150	
Weight	[kg]	1.3	3.7
Hydraulics			
Max. operating pressure	[bar]	Port P and A 350 Port T depressurized	Port A and B 350 Port Y depressurized
Pressure stages	[bar]	25; 64; 160; 210; 350	64; 125; 210
Nominal flow	[l/min]	25	60
Fluid		Hydraulic oil according to DIN 51524	
Fluid temperature	[°C]	-20...+70	
Viscosity permitted recommended	[cSt]/ [mm²/s] [cSt]/ [mm²/s]	20...400 30...80	
Filtration		ISO 4406 (1999); 18/16/13	

NG06 setting pressure max. 25 bar

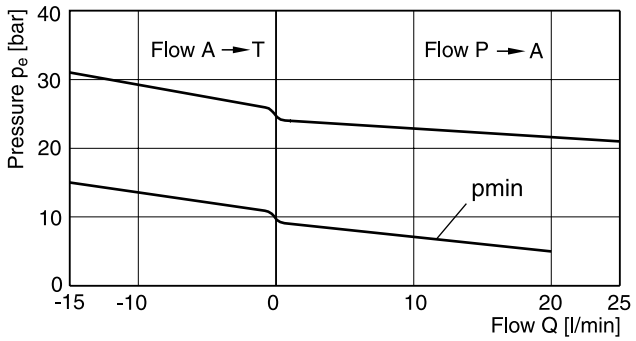

NG06 setting pressure max. 160 or 210 bar

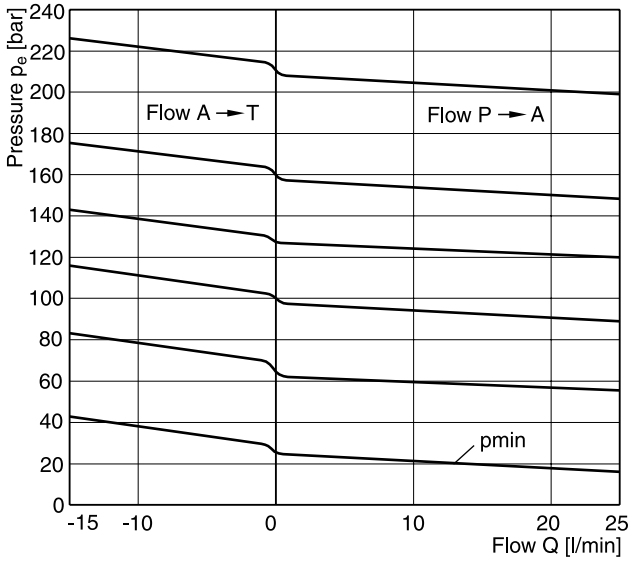

4

NG06 setting pressure max. 64 bar

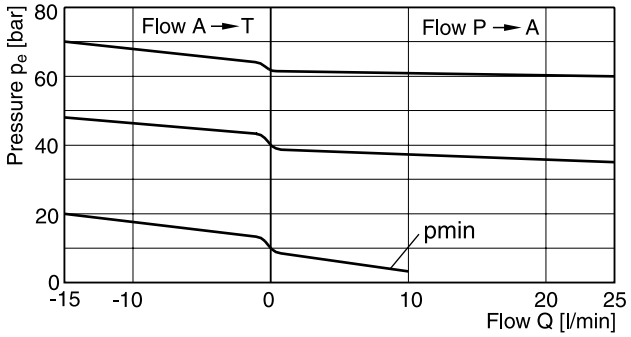

NG10 setting pressure max. 64 bar

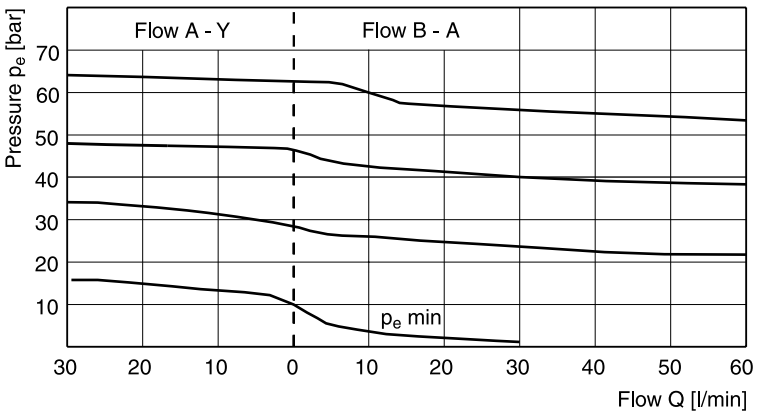

NG10 setting pressure max. 210 bar

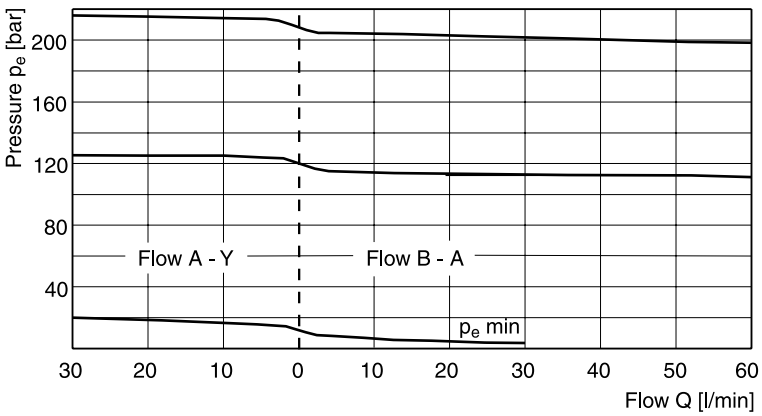

All characteristic curves measured with HLP46 at 50 °C.

NG06

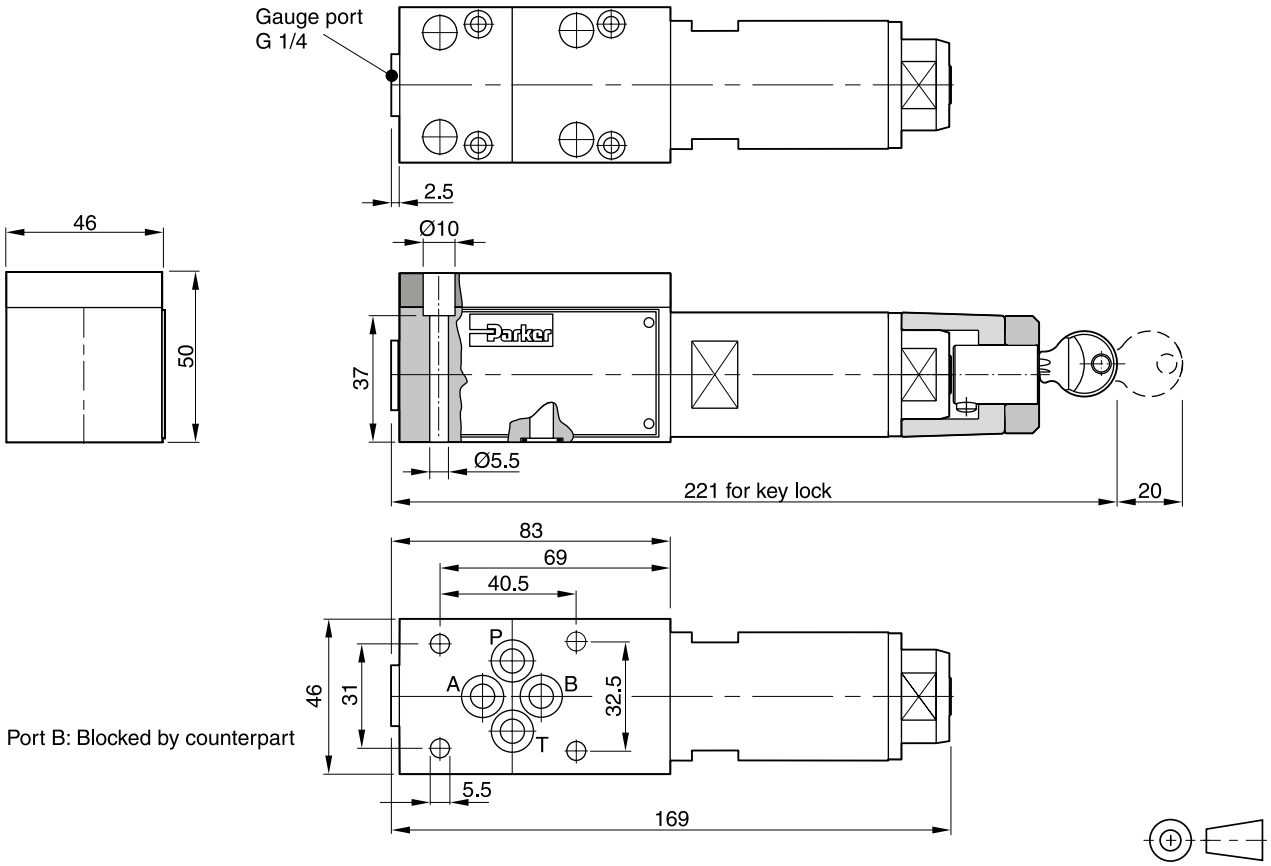

Surface finish	Bolt kit			Kit FPM
R_{max}6.3 ⏥ 0.01/100	BK443	4x M5x45 ISO 4762-12.9	7.6 Nm ±15 %	SK-VB/VM/VS-A06V

Mounting pattern ISO 5781-03-04-0-00

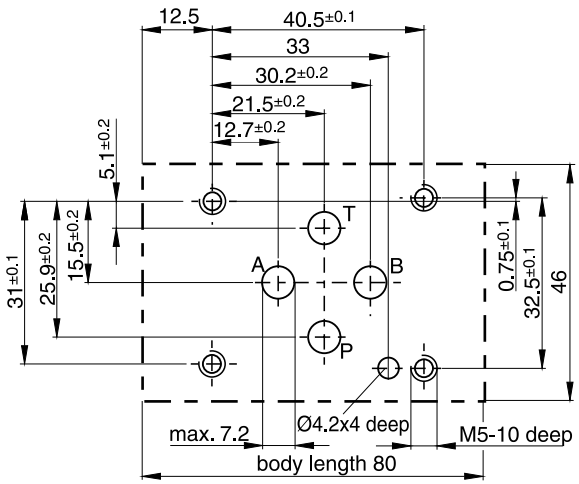

NG10

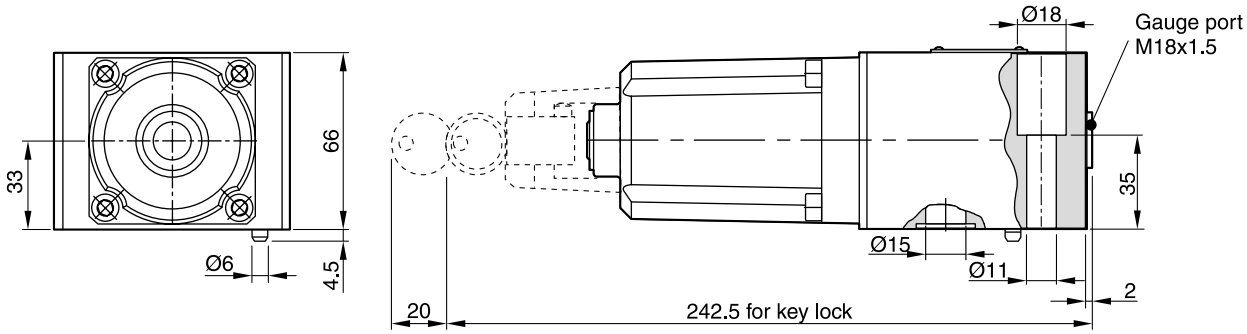

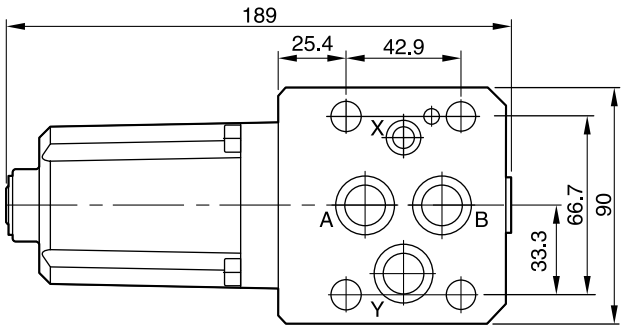

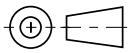

Surface finish	Bolt kit			Kit FPM
R_{max}6.3 0.01/100	BK389	4x M10x50 ISO 4762-12.9	63 Nm ±15 %	SK-VB/VM-A10V

Mounting pattern ISO 5781-06-07-0-00 [1)]

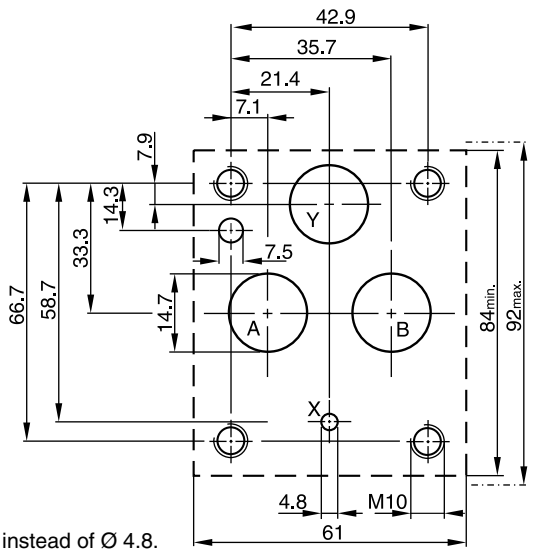

[1)] Deviating from ISO the Y port has Ø 14.7 instead of Ø 4.8.

Subplate mounted pressure reducing valves series R4R are used to control the pressure in the secondary part of the hydraulic system. Independent of the primary pressure the secondary pressure is reduced to the pressure setting. In order to avoid undesired motion the valves are normally closed.



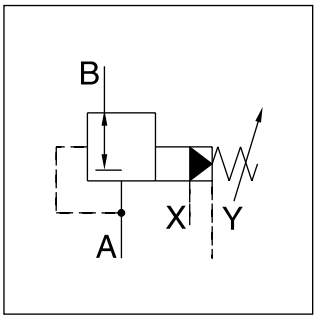

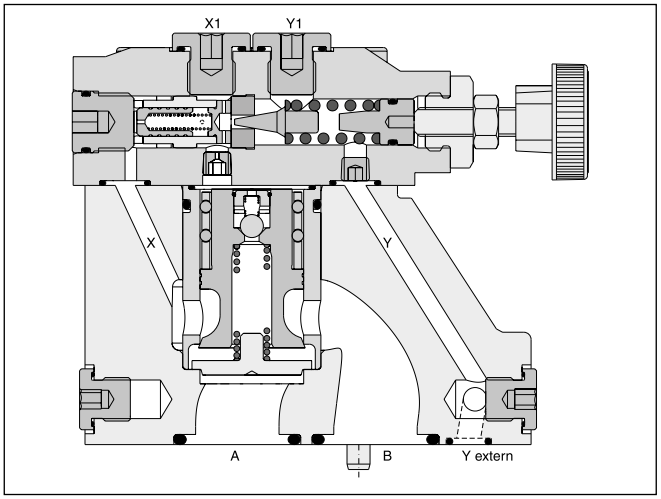

Features

- Pilot operated with manual adjustment
- Subplate mounting acc. to ISO 5781
- Normally closed to avoid unintended motion
- 3 pressure stages
- 3 adjustment modes:
  - hand knob
  - acorn nut with lead seal
  - cylinder lock

4

Ordering code

R	4	R		–	5	9				B		
Pressure valve	Interface	Reducing function	Nominal size		Max. pressure (350 bar)	Pilot ports G1/4“	Pressure stages	Adjust-ment	Pilot oil	Design series	Seals	Modifi-cations

Code	Interface	
4	Subplate mounting ISO 5781	NG10 and 25 / NG32 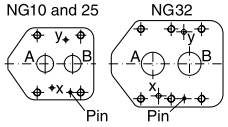

Code	Nominal size
03	NG10
06	NG25
10	NG32

Code	Pressure stages [1]
1	up to 105 bar
3	up to 210 bar
5	up to 350 bar

Code	Seals
1	NBR
5	FPM

Pilot oil		
Code	Pilot	Drain
1	Internal	External from Y
2	Internal	External from Y1

Code	Adjustment
1	Hand knob 32 mm diameter (standard)
3	Acorn nut with lead seal
4	Cylinder lock

[1] Further pressure stages on request.

General				
Nominal size		**NG10**	**NG25**	**NG32**
Interface		Subplate mounting acc. ISO 5781		
Mounting position		Unrestricted, horizontal mounting preferred		
Ambient temperature	[°C]	-20...+60		
$MTTF_D$ value	[years]	75		
Weight	[kg]	2.7	4.5	6.0
Hydraulic				
Max. operating pressure	[bar]	Ports A, B and X 350, port Y depressurized		
Pressure stages	[bar]	105, 210, 350		
Nominal flow	[l/min]	150	350	500
Fluid		Hydraulic oil according to DIN 51524		
Viscosity, permitted	[cSt] / [mm²/s]	20 ... 400		
recommended	[cSt] / [mm²/s]	30 ... 80		
Fluid temperature	[°C]	-20...+70 (NBR: -25...+70)		
Filtration		ISO 4406 (1999); 18/16/13		

4

Reduced pressure pA versus flow Q
R4R03 [1)]

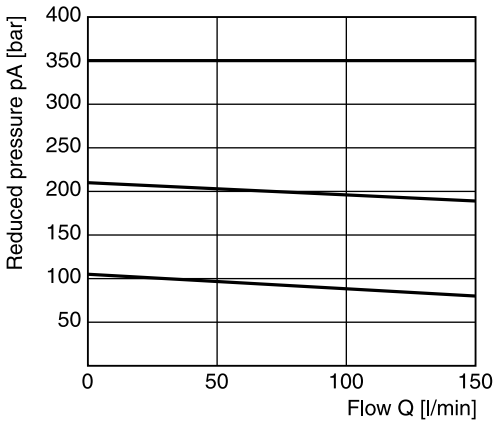

Minimum pressure curve

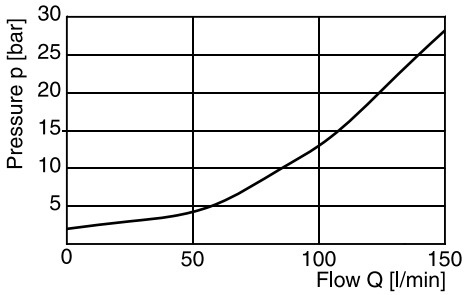

Reduced pressure pA versus flow Q
R4R06 [1)]

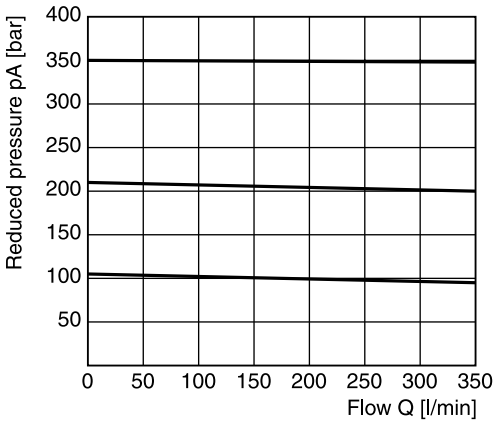

Minimum pressure curve

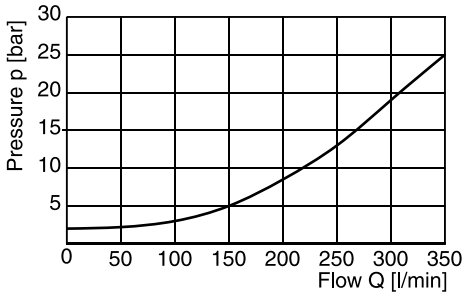

Reduced pressure pA versus flow Q
R4R10 [1)]

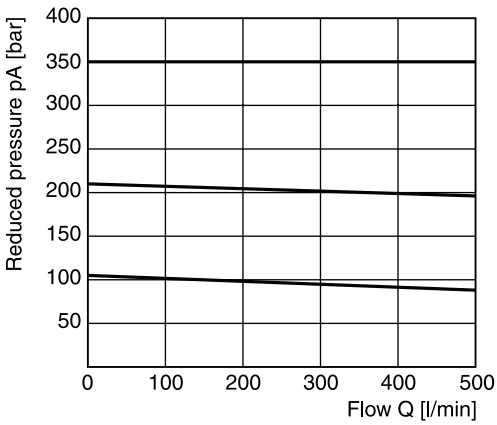

Minimum pressure curve

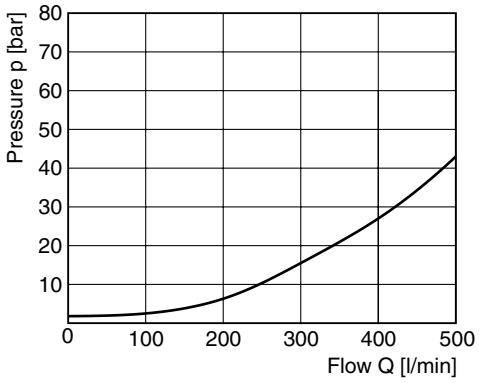

All characteristic curves measured with HLP46 at 50 °C.

[1)] Measured at 350 bar primary pressure pB.

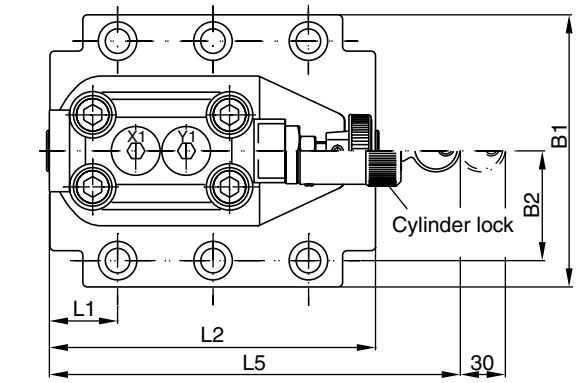

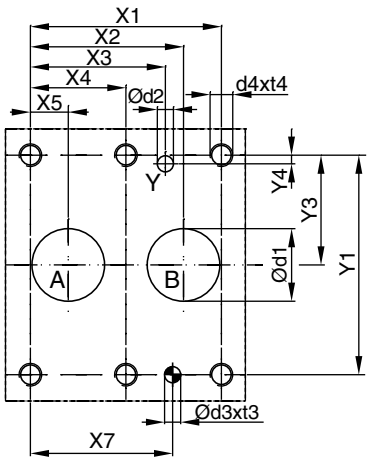

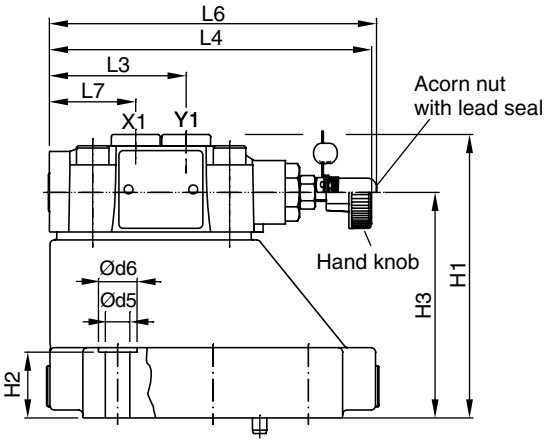

X1: G 1/4“
Y1: G 1/4“

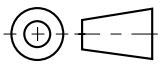

NG	ISO-code	x1	x2	x3	x4	x5	x6	x7	y1	y2	y3	y4	y5	y6
10	5781-06-07-0-00	42.9	35.8	21.5	–	7.2	–	31.8	66.7	–	33.4	7.9	–	–
25	5781-08-10-0-00	60.3	49.2	39.7	–	11.1	–	44.5	79.4	–	39.7	6.4	–	–
32	5781-10-13-0-00	84.2	67.5	59.5	42.1	16.7	–	62.7	96.8	–	48.4	3.8	–	–

Tolerance for all dimensions ±0.2

NG	ISO-code	B1	B2	H1	H2	H3	H4	H5	H6	L1	L2	L3	L4	L5	L6	L7
10	5781-06-07-0-00	87.3	33.35	87	21	62.5	–	–	–	25	90.8	60.8	143	181	144.8	38.6
25	5781-08-10-0-00	105	39.7	111.5	29	87	–	–	–	30.9	123	60.8	143	181	144.8	38.6
32	5781-10-13-0-00	120	48.4	124	30	99.5	–	–	–	29.8	143.5	60.8	143	181	144.8	38.6

NG	ISO-code	d1max	d2max	d3	t3	d4	t4	d5	d6	Subplate [1]
10	5781-06-07-0-00	15	7	7.1	8	M10	16	10.8	17	SPP 3M6B 910
25	5781-08-10-0-00	23.4	7.1	7.1	8	M10	18	10.8	17	SPP 6M8B 910
32	5781-10-13-0-00	32	7.1	7.1	8	M10	20	10.8	17	SPP 10M12B 910

NG	Bolt kit			Kit NBR	Kit FPM	Surface finish
10	BK505	4x M10x35 ISO 4762-12.9	63 Nm ±15 %	S26-58507-0	S26-58507-5	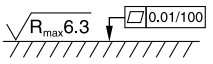
25	BK485	4x M10x45 ISO 4762-12.9	63 Nm ±15 %	S26-58475-0	S26-58475-5	
32	BK506	6x M10x45 ISO 4762-12.9	63 Nm ±15 %	S26-58508-0	S26-58508-5	

[1] Details see chapter 12, series SPP.

Proportional pressure reducing valves of the series VMY allow the variable adjustment of the reduced pressure from 0 bar up to the nominal pressure.

The valve consists of a spool type main stage and a proportionally operated pilot stage. The desired pressure can be variably set corresponding to the command signal specified on the amplifier. The proportional solenoid converts the current of the amplifier into force on the valve poppet of the pilot stage.

Typical applications are pressure systems, test equipment, or counterweight systems. The optimum performance can be achieved in combination with the digital amplifier module PCD00A-400 for open loop systems or with PWDXXA-40* for closed loop systems.

Function VMY*K06

With the proportional solenoids de-energized the main spring forces the main spool into the neutral position. Port A is connected to port T. Thus the reduced pressure only depends on the back pressure in the external drain pipe and/or the tank pressure and can accordingly be reduced down to 0 bar. The pressure present in the P line delivers the pilot oil to the pilot stage via a flow control valve.

When the proportional solenoid is energized, the pilot pressure is increased in the pilot pressure area, and the main spool moves against the spring until the connection P - A opens. The regulation of the reduced pressure on connection A takes place by the constant comparison of the actual pressure and the reference pressure of the pilot stage.



VMY*K06

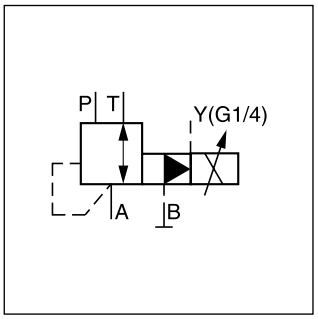

VMY*K06

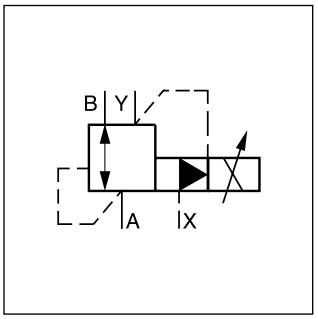

VMY*K10

VMY*K10

The valve spool is designed so that the connection B-A is open in the neutral position and is closed in the working position.

VMY*K06N

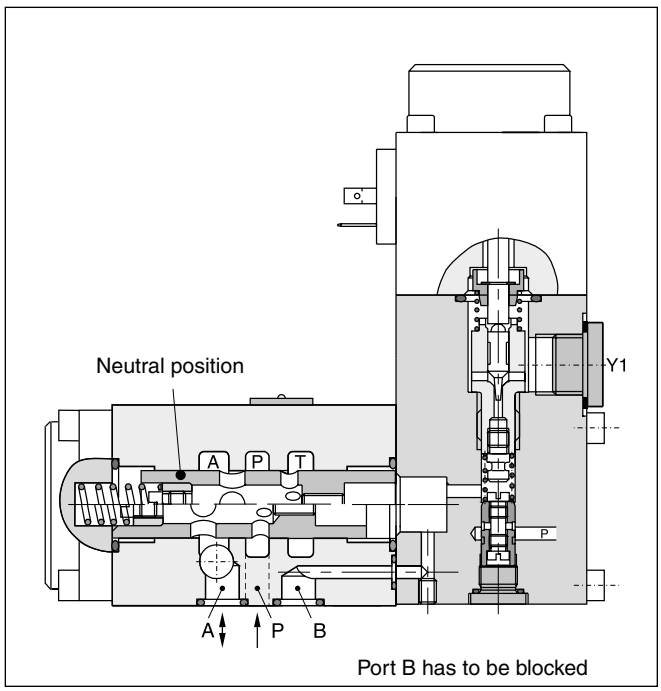

Port B has to be blocked

VMY*K10

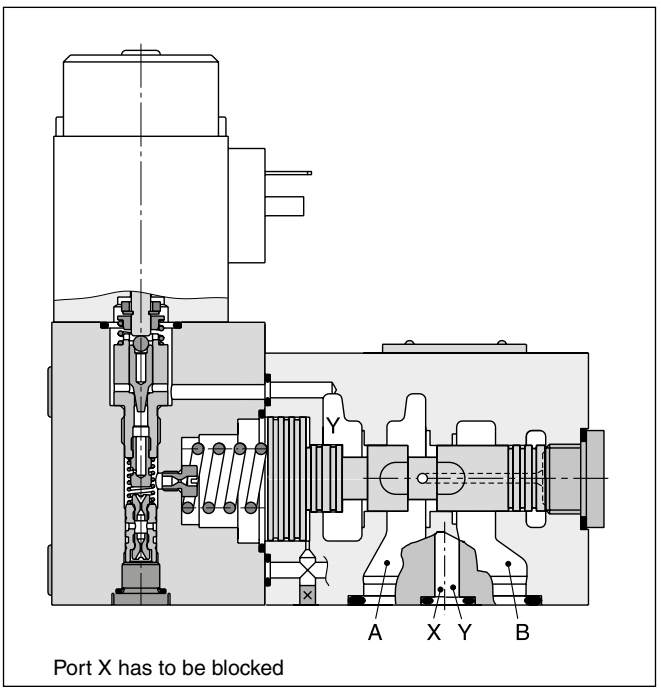

Port X has to be blocked

Ordering code

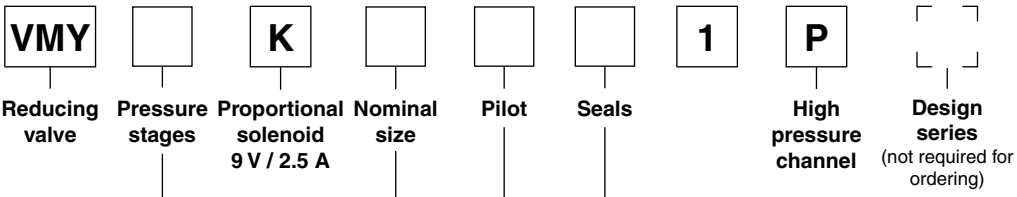

Code	Pressure stages
064	**up to 64 bar**
100	**up to 100 bar**
160	**up to 160 bar**
210	**up to 210 bar**
315	up to 315 bar

Code	Seals
N [2]	**NBR**
V	FPM

Pilot oil				
Code	Size	Pilot	Drain	p_{min} [bar]
omit	**10**	**Internal**	**Internal**	**3 - 4**
N [1]	**06**	**Internal**	**External**	**0.5 - 1**
T	**06**	**Internal**	**Internal**	**1 - 2**

Code	Nominal size
06	**NG06**
10	**NG10**

Bold letters =
Short-term availability

Technical data

General				
Design			3 way proportional reducing valve, pilot operated, spool design	
Nominal size			**06 (DIN NG06/CETOP 03/NFPA D03)**	**10 (DIN NG10/CETOP 05/NFPA D05)**
Interface			Subplate mounting according to ISO 5781	
Actuation			Proportional solenoid	
Mounting position			unrestricted	
Ambient temperature		[°C]	-20 ... +60	
$MTTF_D$ value		[years]	75	
Weight		[kg]	2.8	5
Hydraulics				
Max. operating pressure		[bar]	Size 06: Ports P, A 315; Port T, Y depressurized; port B has to be blocked	
		[bar]	Size 10: Ports A, B 350; Port Y depressurized; port X has to be blocked	
Pressure stages		[bar]	64, 100, 160, 210, 315	
Nominal flow		[l/min]	40	160
Fluid			Hydraulic oil according to DIN 51524	
Viscosity	permitted	[cSt] / [mm²/s]	20 ... 400	
	recommended	[cSt] / [mm²/s]	30 ... 80	
Fluid temperature		[°C]	-20...+70 (NBR: -25...+70)	
Filtration			ISO 4406 (1999); 18/16/13	
Linearity		[%]	See characteristic pressure curves	±3.5 at > 15 % p_{nom}
Repeatability		[%]	<±2	
Hysteresis		[%]	<3	
Response time		[ms]	<150	<200
Electrical				
Duty ratio		[%]	100 ED	
Protection class			IP65 in accordance with EN 60529 (with correctly mounted plug-in connector)	
Nominal voltage		[VDC]	9	
Max. current		[A]	2.7	
Nom. current		[A]	2.5	
Ambient temperature		[°C]	-20...+70	
Coil resistance		[Ohm]	-2.1 (at 20 °C)	
Solenoid connection			Connector as per EN 175301-803	
Power amplifier, recommended			PCD00A-400	

[1] Connection on port Y1 or Y2.
[2] Not for NG06.

NG06 Characteristic pressure lines p = f (U_{set})

Setting range max. 64 bar

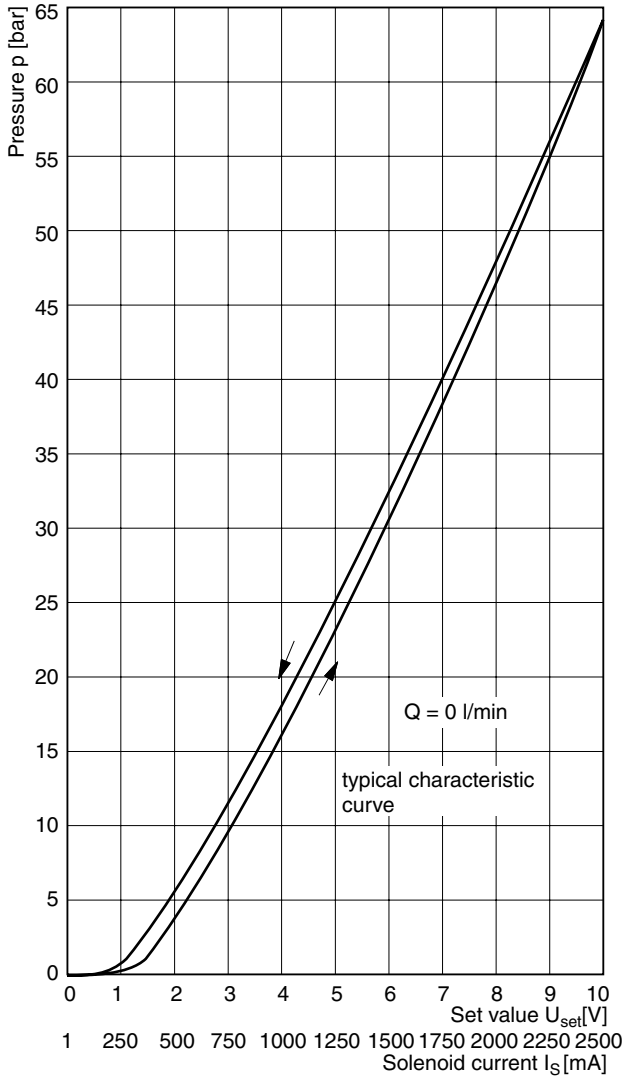

Setting range max. 210 bar

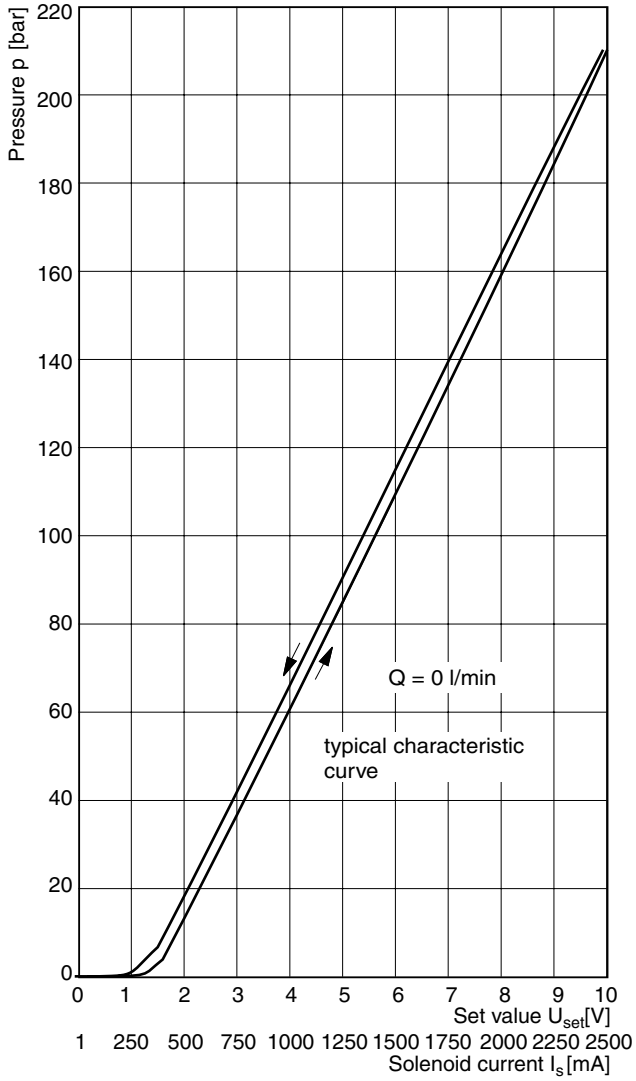

NG06 p/Q characteristics

Setting range max. 64 bar

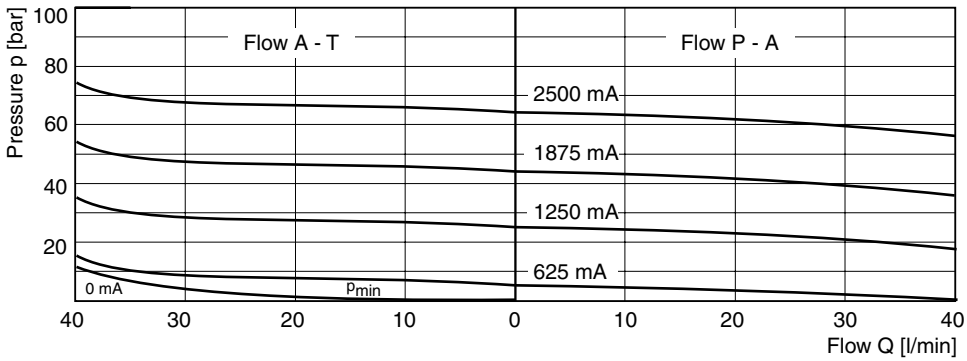

All characteristic curves measured with HLP46 at 50 °C.

NG06 p/Q characteristics

Setting range max. 100 bar

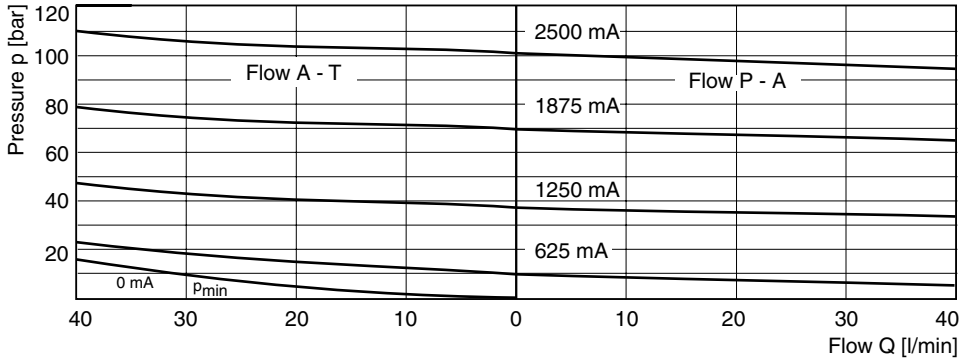

Setting range max. 160 bar

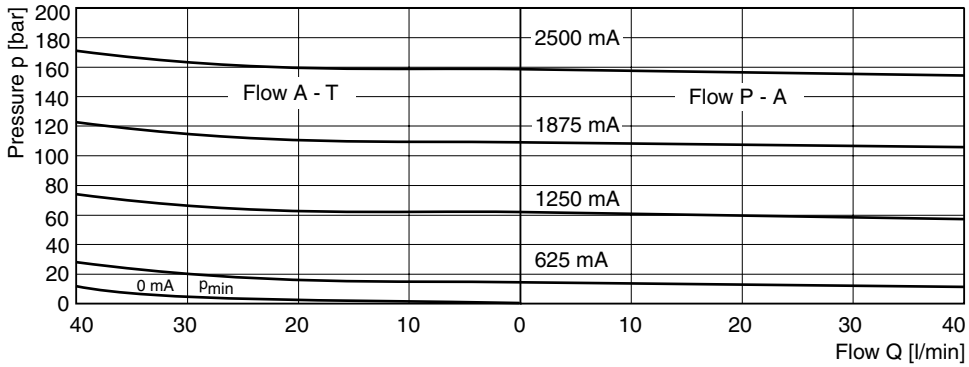

Setting range max. 210 bar

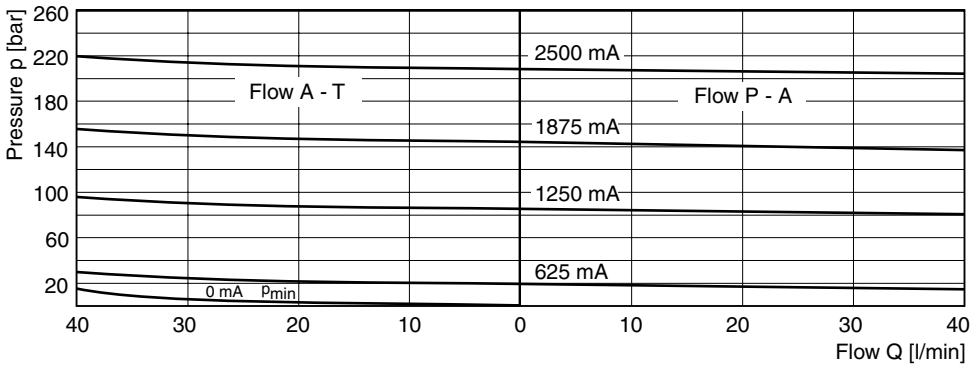

Setting range max. 315 bar

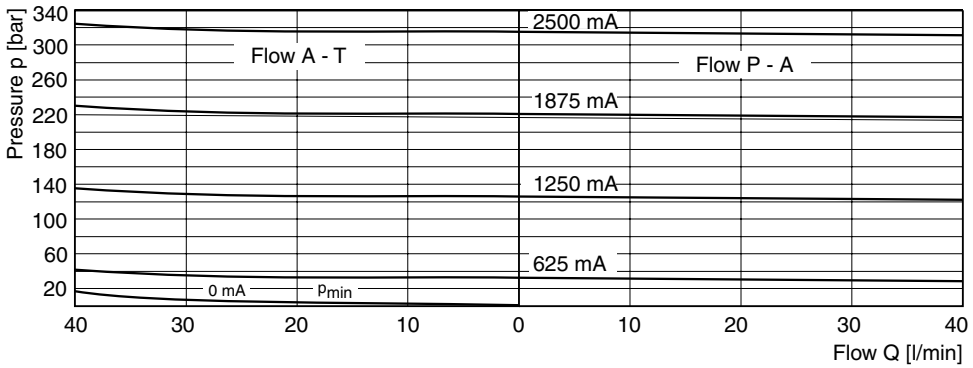

All characteristic curves measured with HLP46 at 50 °C.

Step response

Typical curve

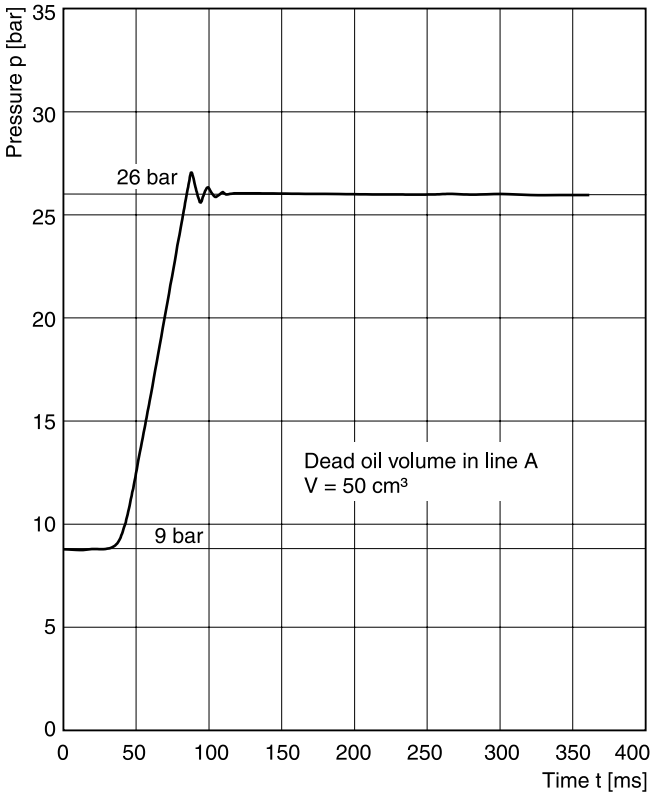

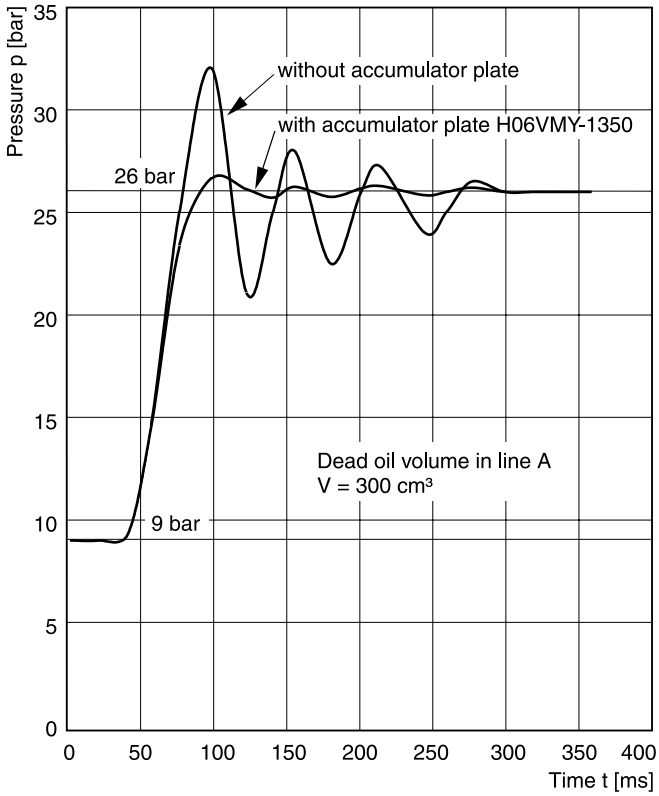

All characteristic curves measured with HLP46 at 50 °C.

Accumulator plate H06VMY-1350

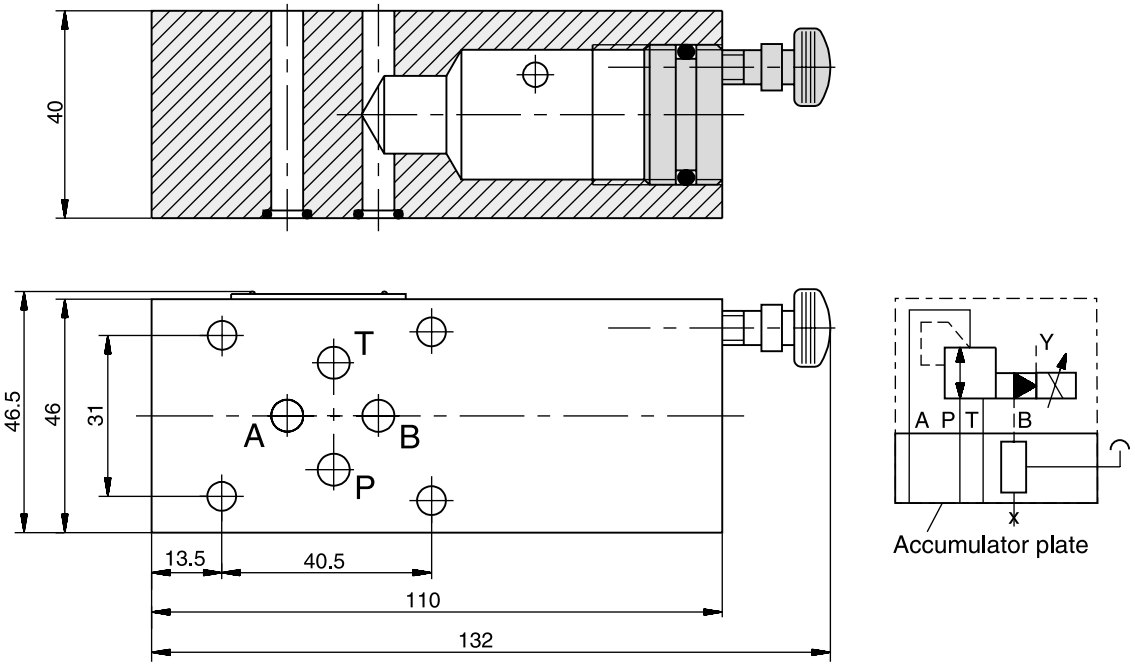

NG10 p/Q characteristics
for pilot oil supply from high pressure channel P

Setting range max. 64 bar

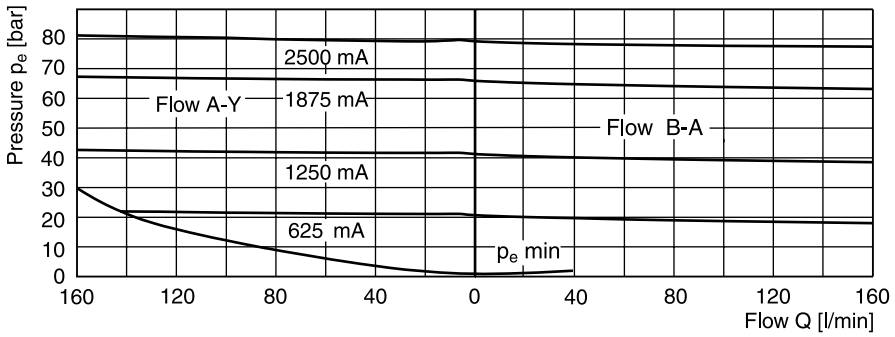

Setting range max. 100 bar

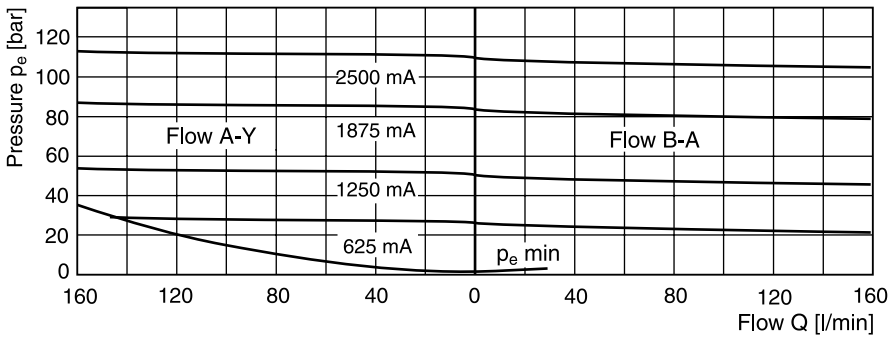

Setting range max. 160 bar

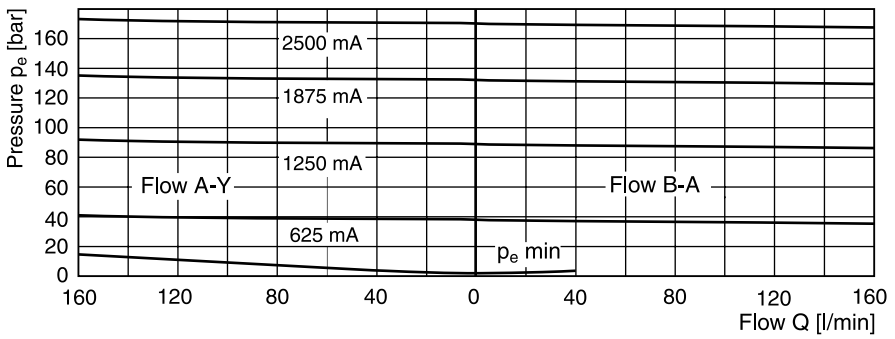

Setting range max. 210 bar

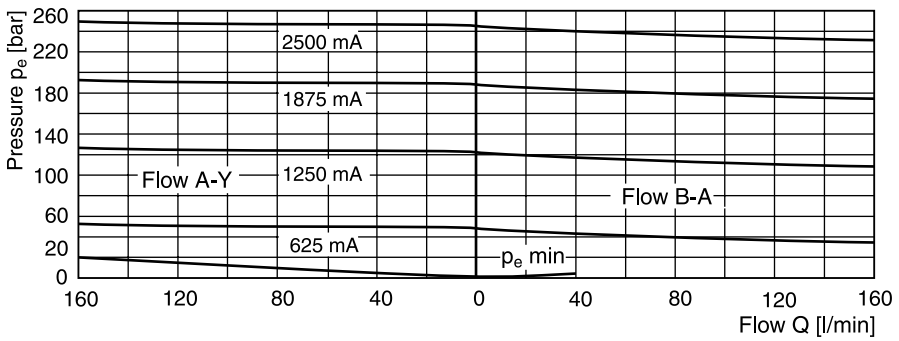

All characteristic curves measured with HLP46 at 50 °C.

NG06

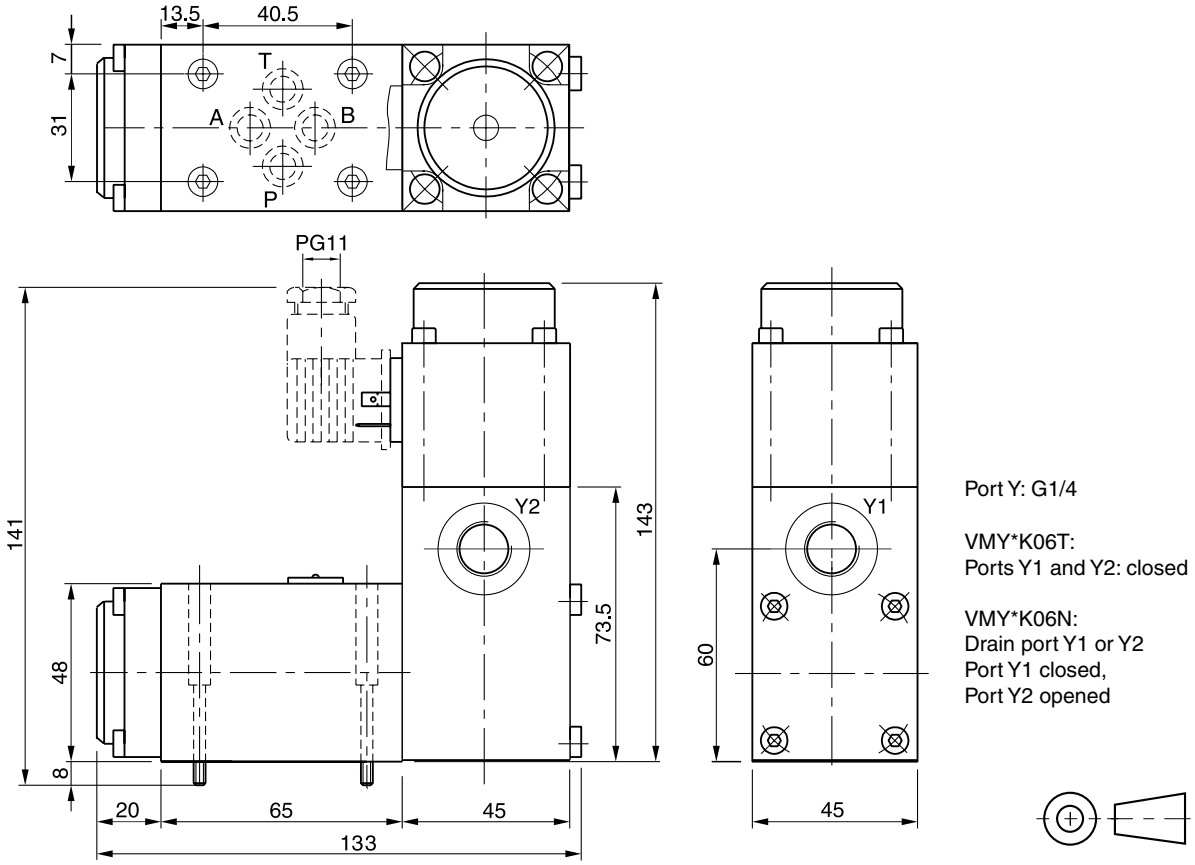

Port Y: G1/4

VMY*K06T:
Ports Y1 and Y2: closed

VMY*K06N:
Drain port Y1 or Y2
Port Y1 closed,
Port Y2 opened

Surface finish	Bolt kit			Kit FPM
$\sqrt{R_{max}6.3}$ 0.01/100	BK375	4x M5x30 ISO 4762-12.9	7.6 Nm ±15 %	SK-VMY-L06-V

Mounting pattern ISO 5781-03-04-0-00

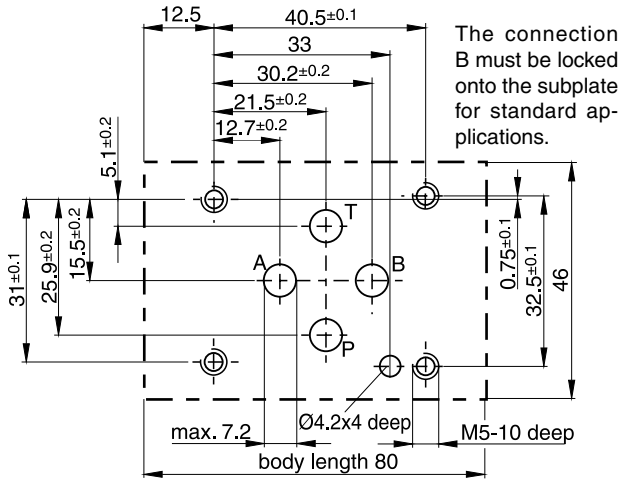

The connection B must be locked onto the subplate for standard applications.

NG10

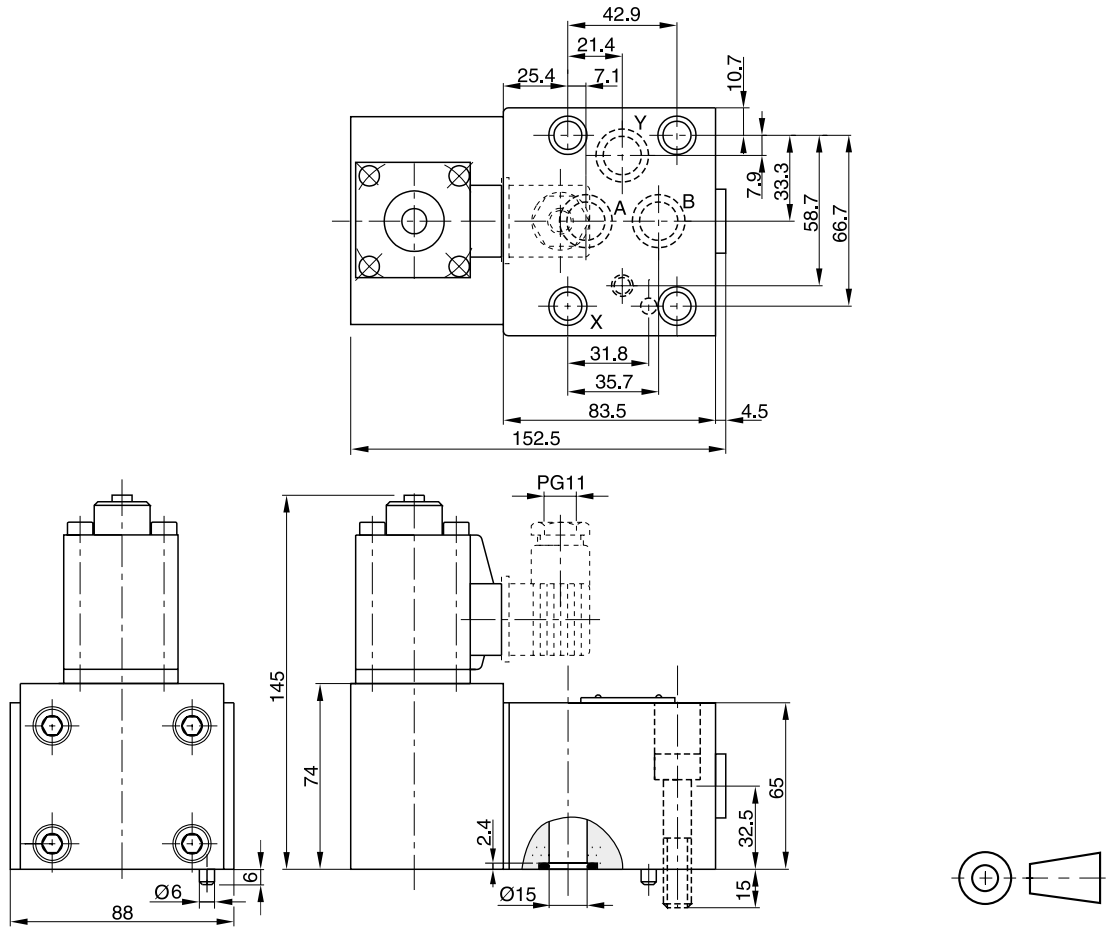

Surface finish	Bolt kit			Kit FPM
$\sqrt{R_{max}6.3}$ 0.01/100	BK389	4x M10x50 ISO 4762-12.9	63 Nm ±15 %	SK-VB/VM-A10V

Mounting pattern ISO 5781-06-07-0-00 [1)]

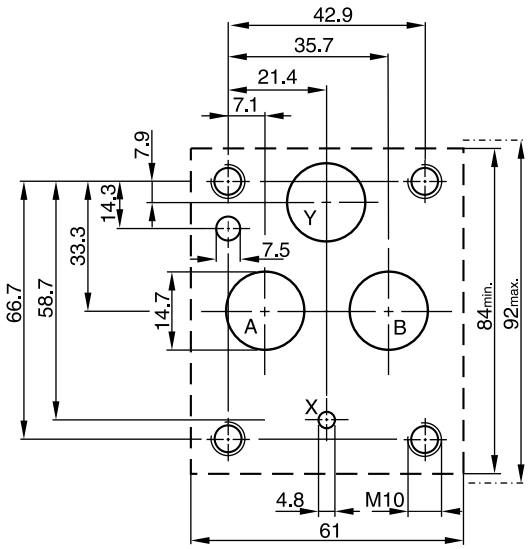

[1)] Deviating from ISO the Y port has Ø 14.7 instead of Ø 4.8.

Subplate mounted proportional pressure reducing valves series R4R have a proportional solenoid operated pilot stage and a cartridge main stage.

The optimum performance can be achieved in combination with the digital amplifier module PCD00A-400.



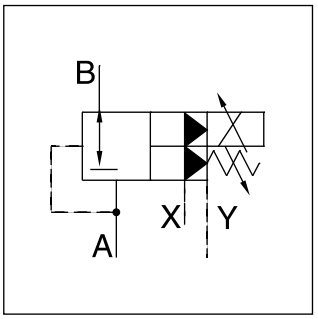

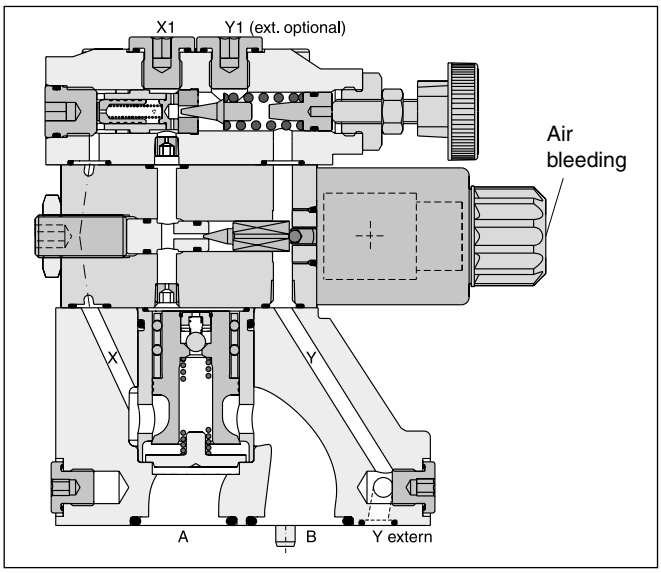

Features

- Pilot operated with proportional solenoid
- Continuous adjustment by proportional solenoid
- Subplate mounting according to ISO 5781
- 3 pressure stages
- With mechanical maximum pressure adjustment

4

Ordering code

R	4	R		–	5	9					P2	G0R	B		
Pressure valve	Interface	Reducing function	Nominal size		Max. pressure 350 bar	Pilot ports G1/4“	Pressure stages	Adjustment	Pilot oil		Prop. operation	Solenoid voltage 12 V, 2.3 A	Design series	Seal	Modifi-cations

Code	Interface	
4	Subplate mounting ISO 5781	NG10 and 25 / NG32 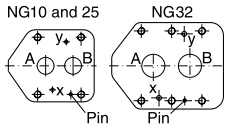

Code	Seals
1	NBR
5	FPM

Code	Nominal size
03	NG10
06	NG25
10	NG32

Pilot oil		
Code	Pilot	Drain
1	Internal	External from Y
2	Internal	External from Y1

Code	Pressure stages
1	up to 105 bar
3	up to 210 bar
5	up to 350 bar

Code	Adjustment
1	Hand knob 32 mm diameter (standard)
3	Acorn nut with lead seal

Technical data

General				
Nominal size		**NG10**	**NG25**	**NG32**
Interface		Subplate mounting acc. ISO 5781		
Mounting position		Unrestricted, horizontal mounting preferred		
Ambient temperature	[°C]	-20...+60		
$MTTF_D$ value	[years]	75		
Weight	[kg]	4.8	7.2	13.5
Hydraulic				
Max. operating pressure	[bar]	Ports A, B and X 350, port Y depressurized		
Pressure stages	[bar]	105, 250, 350		
Nominal flow	[l/min]	150	350	500
Fluid		Hydraulic oil according to DIN 51524		
Viscosity, permitted recommended	[cSt] / [mm²/s] [cSt] / [mm²/s]	20 ... 400 30 ... 80		
Fluid temperature	[°C]	-20...+70 (NBR: -25...+70)		
Filtration		ISO 4406 (1999); 18/16/13		
Electrical				
Duty ratio	[%]	100 ED		
Protection class		IP65 in accordance with EN 60529 (with correctly mounted plug-in connector)		
Nominal voltage	[V]	12		
Max. current	[A]	2.3		
Coil resistance	[Ohm]	4 at 20 °C		
Solenoid connection		Connector as per EN 175301-803		
Power amplifier, recommended		PCD00A-400		

Command/pressure curves

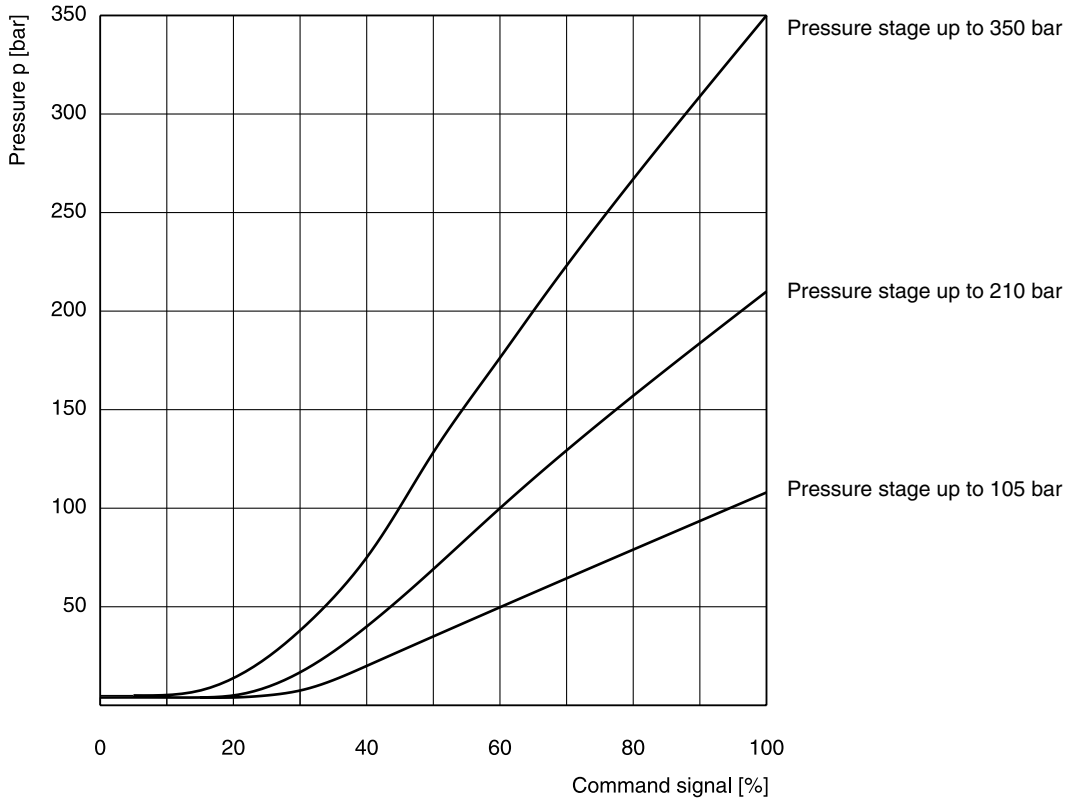

All characteristic curves measured with HLP46 at 50 °C.

Reduced pressure pA versus flow Q
R4R03 [1)]

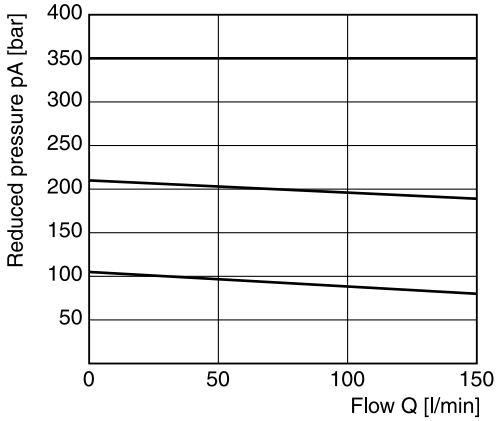

Minimum pressure curve

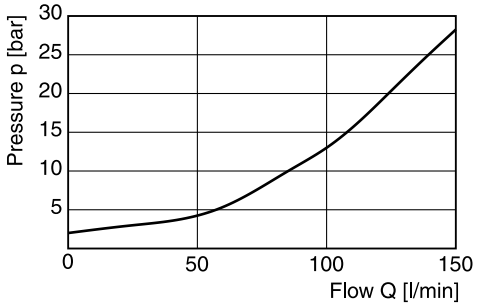

Reduced pressure pA versus flow Q
R4R06 [1)]

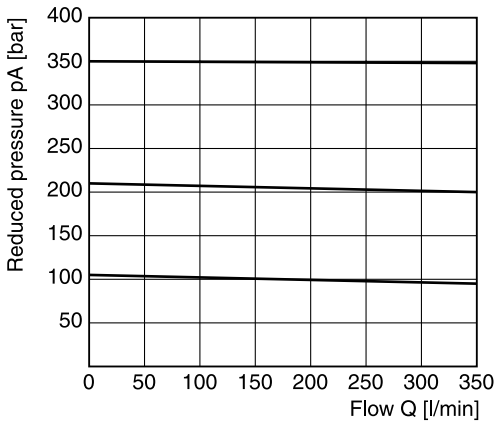

Minimum pressure curve

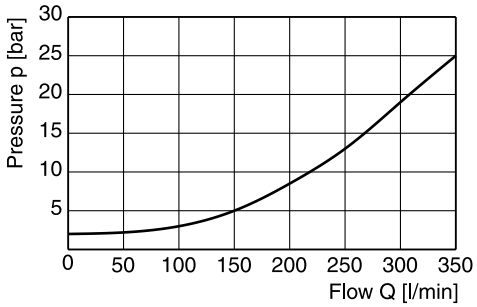

Reduced pressure pA versus flow Q
R4R10 [1)]

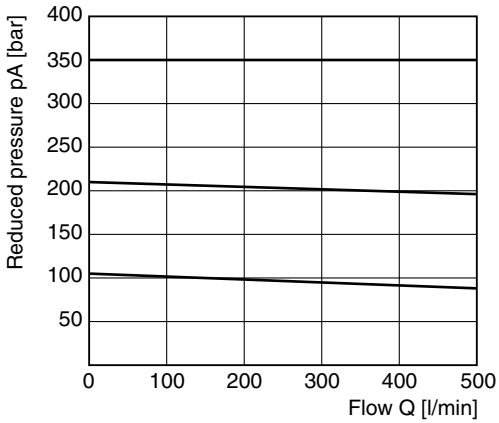

Minimum pressure curve

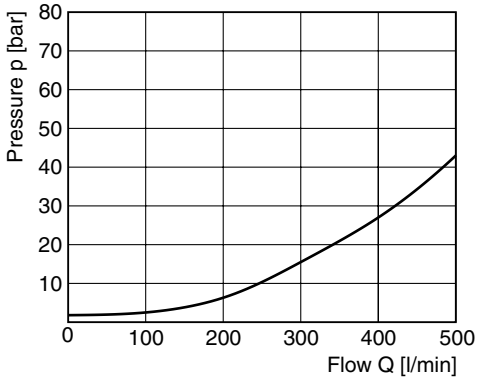

All characteristic curves measured with HLP46 at 50 °C.

[1)] Measured at 350 bar primary pressure pB.

4

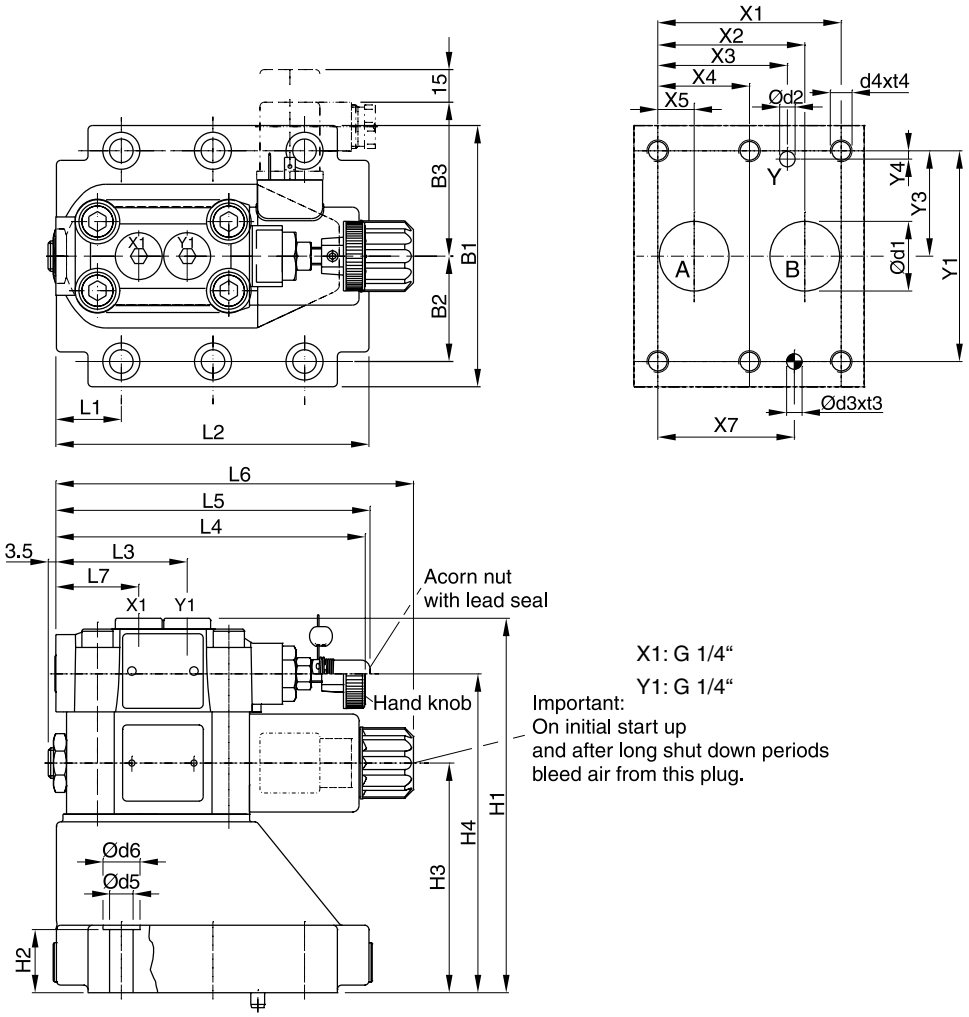

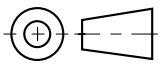

NG	ISO-code	x1	x2	x3	x4	x5	x6	x7	y1	y2	y3	y4	y5	y6
10	5781-06-07-0-00	42.9	35.8	21.5	–	7.2	–	31.8	66.7	–	33.4	7.9	–	–
25	5781-08-10-0-00	60.3	49.2	39.7	–	11.1	–	44.5	79.4	–	39.7	6.4	–	–
32	5781-10-13-0-00	84.2	67.5	59.5	42.1	16.7	–	62.7	96.8	–	48.4	3.8	–	–

Tolerance for all dimensions ±0.2

NG	ISO-code	B1	B2	B3	H1	H2	H3	H4	L1	L2	L3	L4	L5	L6	L7
10	5781-06-07-0-00	87.3	33.35	71	134	21	68.5	109.5	25	90.8	60.8	143	144.8	164.8	38.6
25	5781-08-10-0-00	105	39.7	71	158.5	29	93	134	30.9	123	60.8	143	144.8	164.8	38.6
32	5781-10-13-0-00	120	48.4	71	171	30	105.5	146.5	29.8	143.5	60.8	143	144.8	164.8	38.6

NG	ISO-code	d1max	d2max	d3	t3	d4	t4	d5	d6	Subplate [1]
10	5781-06-07-0-00	15	7	7.1	8	M10	16	10.8	17	SPP 3M6B 910
25	5781-08-10-0-00	23.4	7.1	7.1	8	M10	18	10.8	17	SPP 6M8B 910
32	5781-10-13-0-00	32	7.1	7.1	8	M10	20	10.8	17	SPP 10M12B 910

NG	Bolt kit			Kit		Surface finish
				NBR	FPM	
10	BK505	4x M10x35 ISO 4762-12.9	63 Nm ±15 %	S26-58507-0 [2]	S26-58507-5 [2]	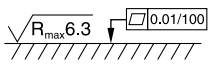
25	BK485	4x M10x45 ISO 4762-12.9	63 Nm ±15 %	S26-58475-0 [2]	S26-58475-5 [2]	
32	BK506	6x M10x45 ISO 4762-12.9	63 Nm ±15 %	S26-58508-0 [2]	S26-58508-5 [2]	
Prop. section P2				S26-58473-0	S26-58473-5	

[1] Details see chapter 12, series SPP.
[2] Please combine seal kit of one size with seal kit of Prop. section P2 for complete seal kit.

Description	Threaded cable joint	Body colour coding	Figures switching	Order no.
Plug EN 175301-803[1], design type AF, protection class IP65 voltages up to 250 V	PG 9	black, B grey, A	Fig. 1	**5001710** **5001711**
	PG11	black, B grey, A	Fig. 1	**5001716** **5001717**
Plug with LED insert 24 V	PG11	black, B grey, A	Fig.1 and Fig. 3	**5001571** **5001572**
Plug with lamp insert 110 V	PG11	black, B grey, A	Fig.1 and Fig. 4	**5001573** **5001574**
Plug with lamp insert 230 V	PG11	black, B grey, A	Fig.1 and Fig. 4	**5001575** **5001576**
Plug with LED insert 24 V and supressing circuitry	PG11	black, B grey, A	Fig.1 and Fig. 5	**5001708** **5001709**
Plug with rectifier. Rectifier with 4 silicon diodes in bridge circuit. Varistor in alternating current side to protect the diodes against power peaks	PG11	black, B grey, A	Fig.1 and Fig. 6	**5001737** **5001738**
Plug with pull relief and translucent cover	PG11	black, B grey, A	Fig. 2	**5001723** **5001724**
Application with bridge rectifier suitable for 5001723 and 5001724	—	—	Fig. 2 and Fig. 7	**5001727**
Application with bridge rectifier and lamp suitable for 5001723 and 5001724	—	—	Fig. 2 and Fig. 8	**5001734**

Fig. 1

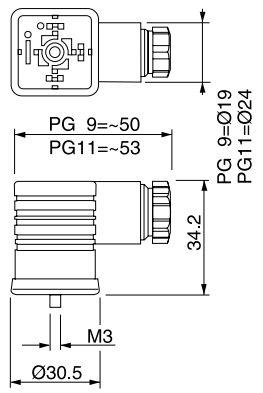

Fig. 3

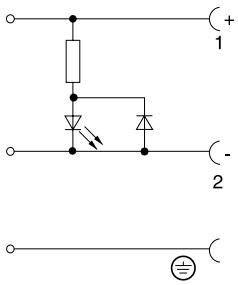

Fig. 5

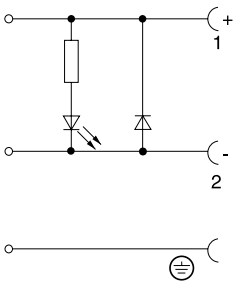

Fig. 7

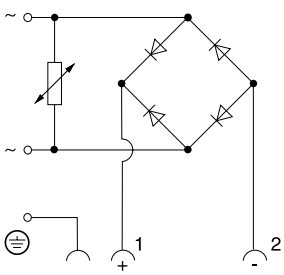

Fig. 2

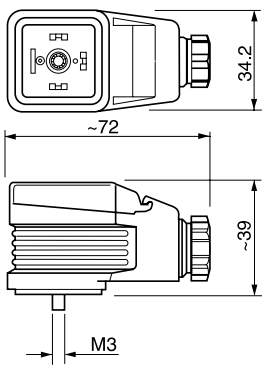

Fig. 4

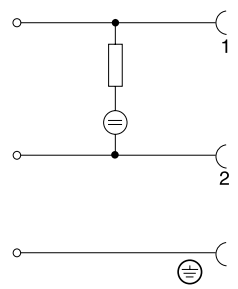

Fig. 6

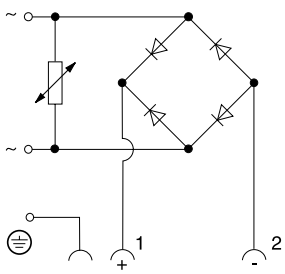

Fig. 8

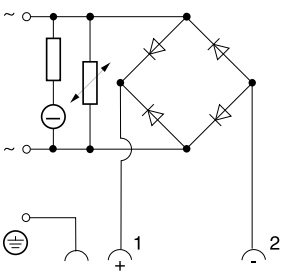

Input voltage
max. 240 V~
Output voltage
max. 213 V=

[1] EN 175301-803 (new) corresponding with DIN 43650 (old).

Central connector

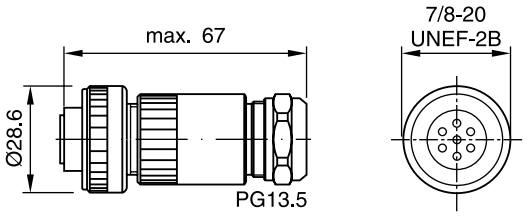

Description	Order No.
DIN 43563 6+PE	5004072

4

Series	Description	Size								Mounting		Page
	Parker Standard DIN / ISO	1/4	3/8	1/2	3/4	1	06	10	16	Subplate	Screw-in	
	Throttle valves, manual adjustment											
MVI		•	•	•	•						•	5-2
NS		•	•	•	•	•				•		5-4
FS	With free return flow	•	•	•	•	•				•		5-6
	Flow control valves, manual adjustment											
PC*MS		•	•	•	•	•				•		5-8
GFG2							•			•		5-10
2F1C								•	•	•		5-14
	Flow control valves, proportional adjustment											
DUR*L							•			•		5-20

5

More flow valves are presented in the following chapters:
Chapter 7: Sandwich Valves
Chapter 8: Slip-In Cartridge Valves
Chapter 9: SAE Flange Valves
Chapter 10: Valves for Pipe Mounting

Manatrol needle valve with steel body as screw-in valve for block insertion, optionally with a 30° taper fine V-notch or micro-fine rectangular slot. The form of the metering opening influences the accuracy of the flow adjustment, which is pressure and viscosity dependent. The needle is made of stainless steel and fits into a ring gap in the valve cartridge. For details of cutting tools for reaming the block bore, see 'Accessories' at the end of this chapter.

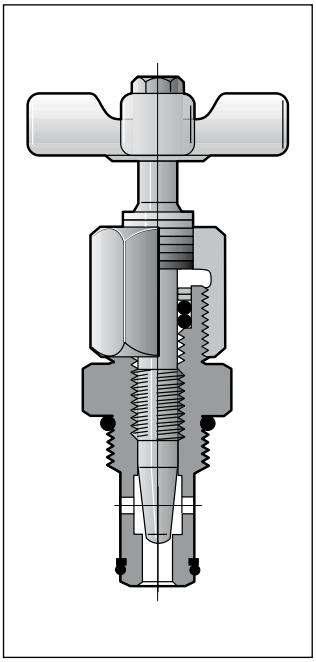

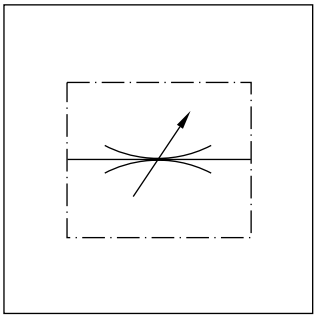



Characteristic values

Size	Operating press. [bar]	Flow [l/min] Δp 10 bar	Max. orifice area [cm²]	Kv factor valve	Weight [kg]
400	350	25	0.14	6.3	0.18
600	350	65	0.37	18.5	0.32
800	350	105	0.55	27.5	0.59
1200	350	160	0.90	45.7	0.95
Needle size					
400-2		11	0.52		
400-3		2	0.012		

5

$$\text{Flow rate } Q \text{ [l/min]} = Kv \cdot \sqrt{\frac{\Delta p}{\gamma}}$$

Kv	see table
Δp [bar]	
γ [kg/dm³]	= specific gravity of fluid
(γ for mineral oil	= 0.85 – 0.9)

Δp/Q curves

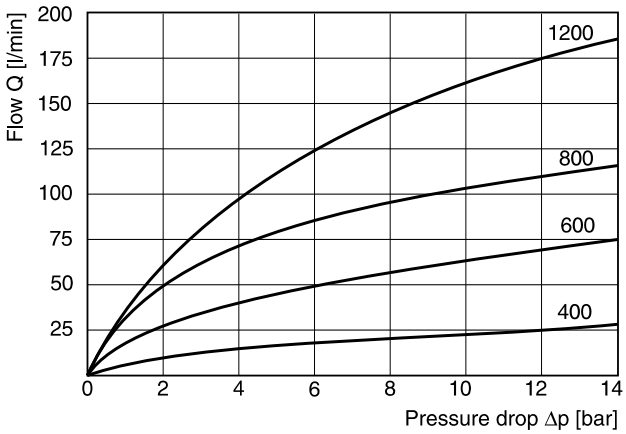

All characteristic curves measured with HLP46 at 50 °C.

Ordering code

MVI		S		
Cartridge-type needle valve	Size and screw-in threads	Steel body	Needle	Seal

Code	Size	Threads
400	**1/4"**	**3/4 - 16 UNF-2B**
600	**3/8"**	**7/8 -14 UNF-2B**
800	**1/2"**	**1 1/16 - 12 UN-2B**
1200	**3/4"**	**1 5/16 - 12 UN-2B**

Code	Seal
omit	**NBR**
V	FPM

Code	Needle
omit	**Standard 30° taper**
2 [1)]	Fine V-notch
3 [1)]	Micro-fine slotted

Bold letters =
Short-term availability

[1)] Only for size 400.

Threaded cartridge valve

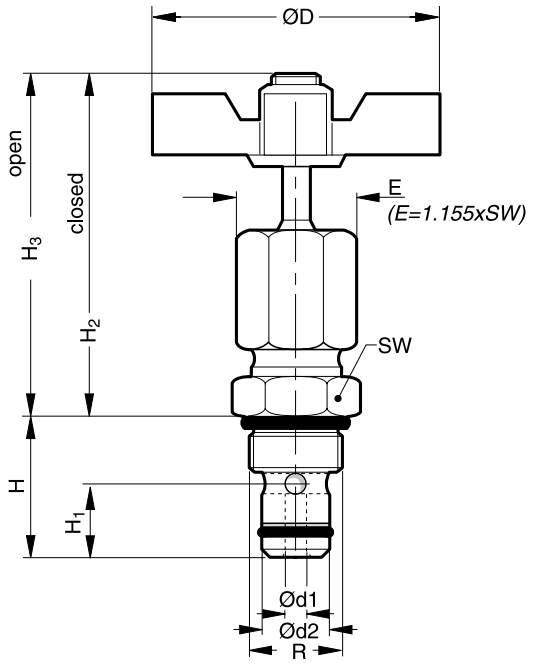

Size	H	H3	H2	H1	Ød1	Ød2	R (Threads)	ØD	SW
MVI 400	25.4	65	60	10.9	4.6	14.22	3/4 - 16 UNF-2	51	22.1
MVI 600	30	81	73	13.5	7.9	15.8	7/8 - 14 UNF-2	64	25.4
MVI 800	39.6	91	79	15.2	9.4	20.55	1 1/16 - 12 UN-2	83	31.8
MVI 1200	43.4	102	88	19.1	11.7	26.92	1 5/16 - 12 UN-2	98	38.1

Mounting cavity

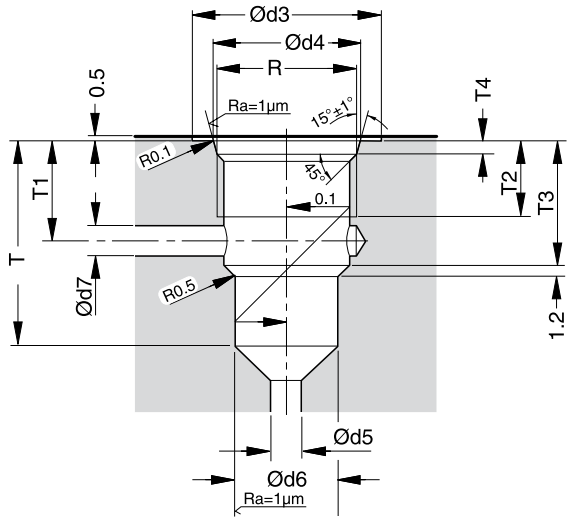

Size	Ød3	Ød4+ 0.12	Ød5 (min)	Ød6+ 0.05	Ød7	T4+ 0.38	T2	T3	T	T1
MVI 400	26	20.6	5.3	14.275	5.3	2.54	15	17.8	27	14.2
MVI 600	30	23.93	8.1	15.85	8.1	2.54	17	21.6	32	16.5
MVI 800	37	29.16	10.2	20.6	10.2	3.3	19	30	42	24.1
MVI 1200	44	35.54	12.7	26.975	12.7	3.3	19	31.8	46	24.6

Manatrol shut-off and metering valves with 2 stage needle cone. Fine adjustment for the first stage can be achieved with 3 rotations of the adjustment knob. The second stage with normal throttle characteristics is achieved with 3 further rotations.

A cylindrical needle with a rectangular slot is provided to reduce the viscosity effect for sizes 400 and 600. The flow is dependent on pressure and viscosity.

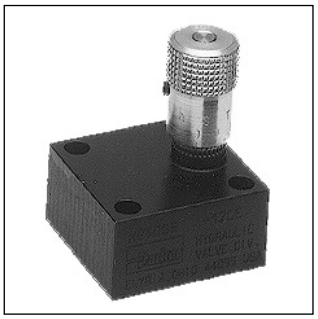

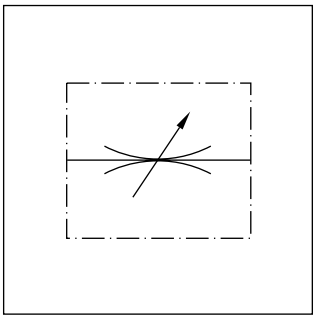

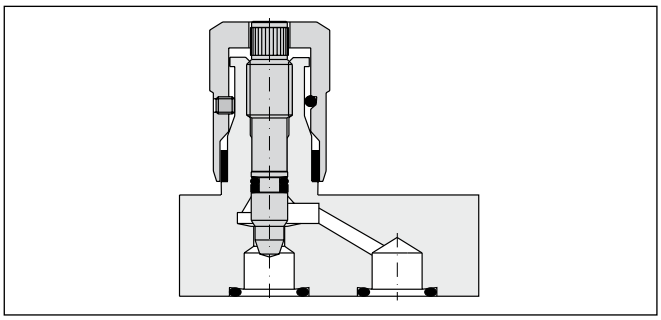

5

Characteristic values
(only for standard 2 stage needle)

Size	Press. [bar] steel	brass	Flow [l/min] Δp 10 bar	Max. cross-section [cm²]	Kv factor valve open	Weight [kg]
400	210	140	25	0.13	6.3	0.4
600	210	140	40	0.22	11.2	0.6
800	210	140	50	0.28	13.9	1.0
1200	210	140	120	0.70	35.4	2.0
1600	210	35	250	1.48	75	4.0

$$\text{Flow rate } Q \text{ [l/min]} = Kv \cdot \sqrt{\frac{\Delta p}{\gamma}}$$

Kv — from the table
Δp [bar]
γ [kg/dm³] = specific weight of the medium
(γ for mineral oil = 0.85 – 0.9)

Ordering code

N	S		S			
Needle valve	Subplate mounting	Size	Steel body	Needle	Clamping screw	Seal

Code	Size
400	**400**
600	**600**
800	**800**
1200	**1200**
1600	1600

Code	Needle
omit	**Standard 2 stage needle**
4 [1]	Micro-fine hollow needle with slot

Code	Seal
omit	**NBR**
V	FPM

Code	Clamping screw
omit	**Hexagon socket**
F	With knurled knob

Bold letters =
Short-term availability

[1] Only for sizes 400 to 600.

Δp/Q curves

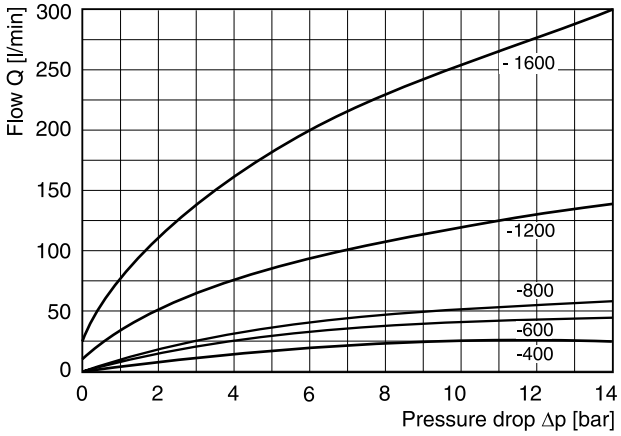

All characteristic curves measured with HLP46 at 50 °C.

5

Dimensions

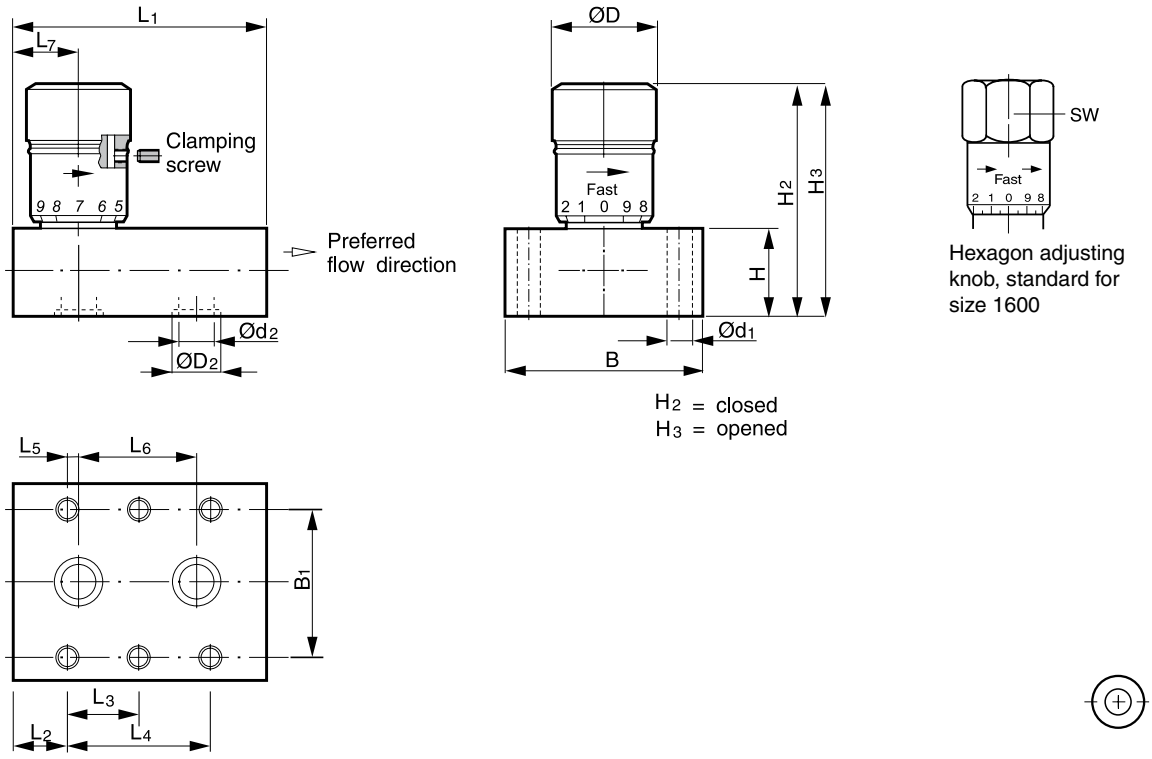

Size	L1	L2	L3	L4	L5	L6	L7	B	B1	H	H2	H3	Ød1	Ød2	ØD2	ØD	SW
NS400	47.8	6.4	–	34.7	4.8	25.4	11.2	44.5	33.3	22.4	49.5	54.6	6.8	7.1	13.3	20.6	–
NS600	50.8	8.6	–	33.6	4.1	25.4	12.7	50.8	38.1	25.4	61.0	67.3	7.0	8.6	16.0	25.4	–
NS800	75.4	18.5	–	38.1	4.1	30.2	22.6	57.2	44.4	25.4	70.0	77.2	7.0	11.9	19.1	30.0	–
NS1200	93.7	8.6	38.1	76.2	11.2	54.4	19.8	69.9	54.1	28.4	79.3	94.5	9.5	16.8	24	34.8	–
NS1600	111.3	7.9	47.8	92.2	19.0	57.2	26.9	76.2	60.4	44.5	123.2	140.0	9.5	22.4	32	–	47.5

Manatrol throttle check valves series FS allow the adjustment of the flow for a defined direction.

A 2 stage needle allows for very exact setting of smaller flow rates with the first 3 rotations of the adjustment knob. After 3 more rotations, the valve is completely open. The valve setting can be locked by a locking screw.



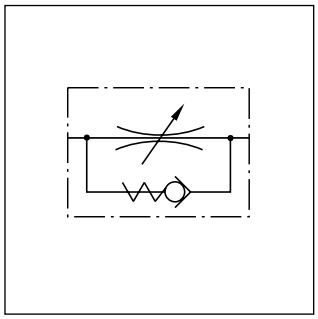

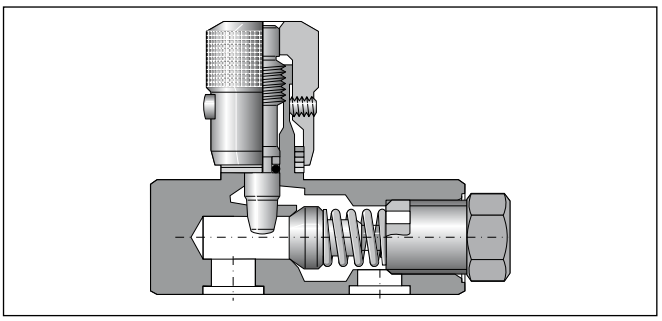

$$\text{Flow rate } Q\ [l/min] = Kv \cdot \sqrt{\frac{\Delta p}{\gamma}}$$

Kv	from the table
Δp [bar]	
γ [kg/dm³]	= specific gravity of fluid
(γ for mineral oil	= 0.85 – 0.9)

5

Characteristic values

Size	Pressure [bar]	Max. flow [l/min Δp10 bar]	Opening [cm²]	Check Kv factor	Throttle surface [cm²]	Throttle v. open Kv factor	Weight [kg]
400 [1)]	210	25	0.37	18.6	0.13	6.3	0.23
600 [1)]	210	40	0.62	30.4	0.22	11.2	0.31
800 [1)]	210	50	0.86	43.4	0.28	14	0.67
1200 [1)]	210	120	1.18	60	0.70	35.4	1.17
1600 [1)]	210	250	2.23	111	1.48	75	2.31

[1)] $MTTF_D$ value 150 years

Ordering code

F	S		S			
Throttle and check valve	Subplate mounting	Size	Steel body	Needle	Clamping screw	Seal

Code	Size
400	**400**
600	**600**
800	**800**
1200	**1200**
1600	1600

Code	Needle
omit	**Standard 2 stage needle**
4 [1)]	Micro-fine hollow needle with slot

Code	Seal
omit	**NBR**
V	FPM

Code	Clamping screw
omit	**Hexagon socket**
F	With knurled knob

Bold letters =
Short-term availability

[1)] Only for sizes 400 to 600.

Δp/Q performance curves

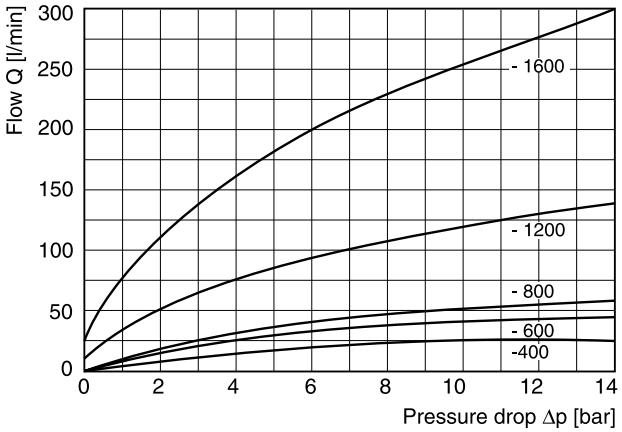

Δp/Q performance curves free flow

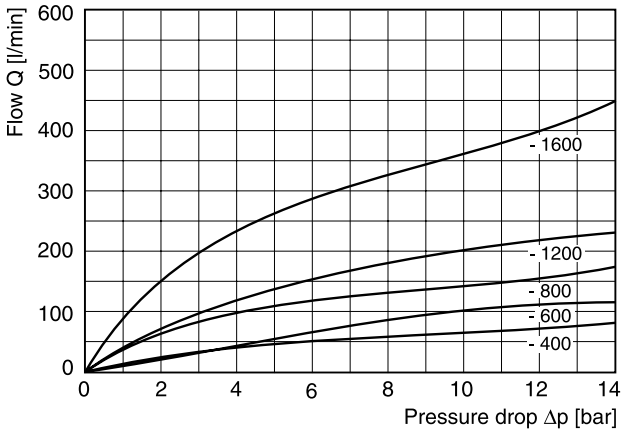

All characteristic curves measured with HLP46 at 50 °C.

5

Dimensions

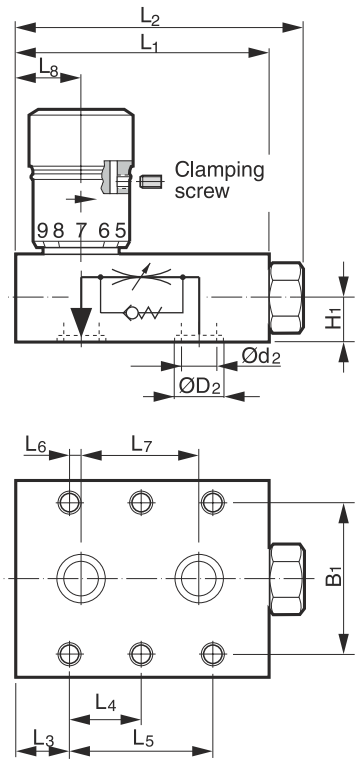

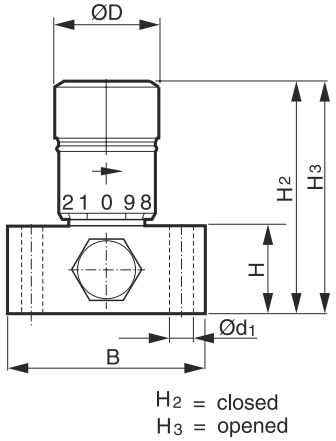

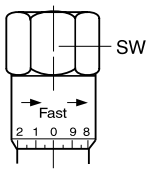

Hex head adjusting knob Standard for Size 1600

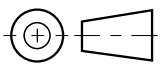

Size	L1	L2	L3	L4	L5	L6	L7	L8	B	B1	H	H1	H2	H3	Ød1	Ød2	ØD2	ØD	SW
FS400	63.5	71.4	14.2	–	35.1	4.9	25.4	21.3	44.5	33.3	22.1	10.9	51.1	56.1	6.8	7.1	13.3	20.6	–
FS600	69.9	78.0	18.3	–	33.3	4.1	25.4	25.4	50.8	38.1	25.4	12.7	61.0	67.3	7.0	10.4	16	25.4	–
FS800	81.0	89.2	21.3	–	38.1	4.1	30.2	30.7	57.2	44.5	31.8	15.7	76.2	83.6	7.0	11.9	19.1	30.0	–
FS1200	103.9	114.6	14.0	38.1	76.2	11.2	54.1	38.6	69.9	54.1	44.5	22.1	95.5	110.5	9.0	16.8	24	34.8	–
FS1600	127.0	137.7	15.7	47.8	95.5	19.3	56.9	45.2	76.2	60.5	50.8	25.4	129.5	146.3	9.0	22.4	32	–	47.5

Manatrol 2-way flow control valves for pressure compensated regulation of the flow. As a consequence of pressure changes, the set value can vary by ± 5 % within the tolerance range. Changes in viscosity and in temperature have the same effect and are to be observed.

The series PCCMS is additionally equipped with a built-in check valve for the return flow.

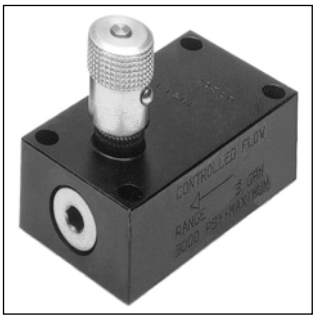

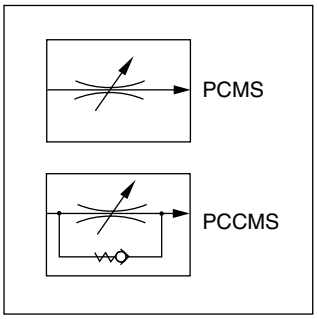

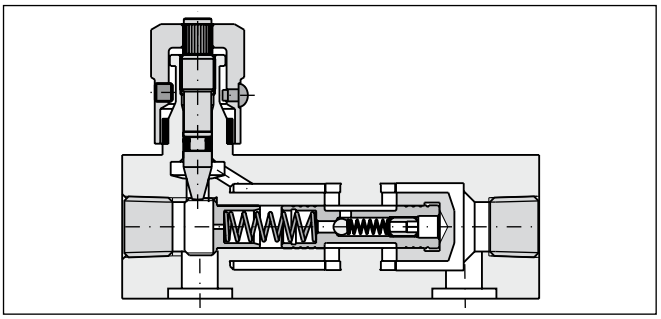

Characteristic values

Size	Max. press. [bar]	Flow control		Check valve		Weight [kg]
		Q[1] [l/min]	Δp [bar]	Q_{max} [l/min]	Δp [bar]	
400	210	1 - 10	7	20	3	0.77
600	210	2 - 25	7	30	3	1.23
800	210	6 - 60	11	75	8	2.50
1200	210	10 - 100	11	130	8	3.18
1600	210	19 - 190	11	250	10	7.41

5

Ordering code

PC		M	S		S			
Pressure compens. flow control valve	Check valve	Manual adjustment	Subplate mounting	Size	Steel body	Clamping screw	Seal	Design series (not required for ordering)

Code	Check valve
omit	**Without check valve**
C	With check valve

Code	Seal
omit	**NBR**
V	FPM

Code	Clamping screw
omit	**Hexagon socket**
F	With knurled knob

Code	Nominal size
400	400
600	**600**
800	**800**
1200	1200
1600	1600

Bold letters =
Short-term availability

[1] Min. and max. flow rate.

Controlled flow vs. pressure drop

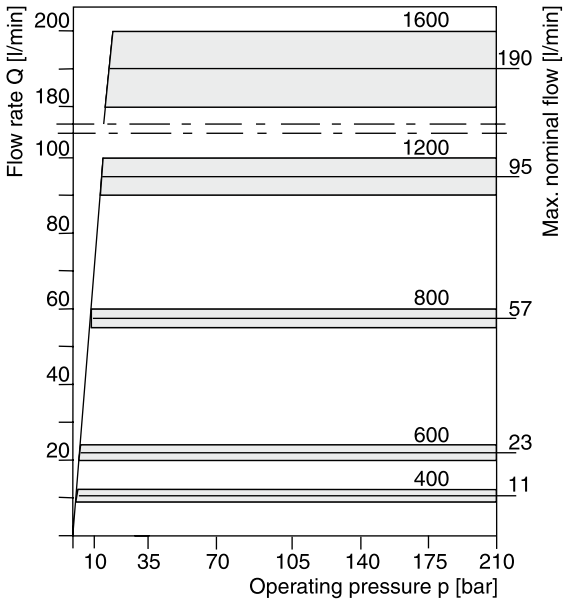

All characteristic curves measured with HLP46 at 50 °C.

Reverse flow vs. pressure drop at minimum and maximum settings

Sizes 400, 600 and 1200

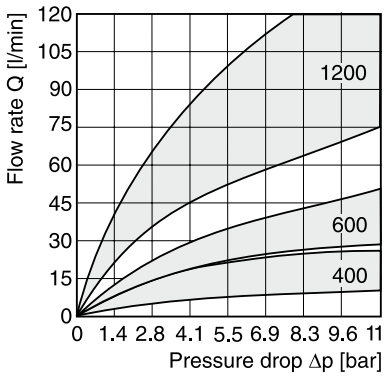

Sizes 800 and 1600

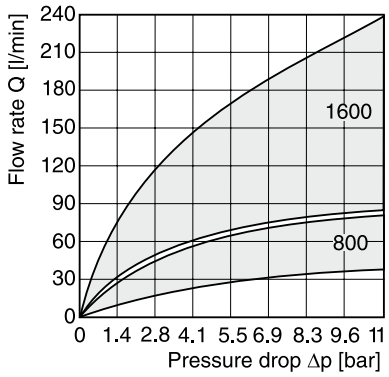

5

Dimensions

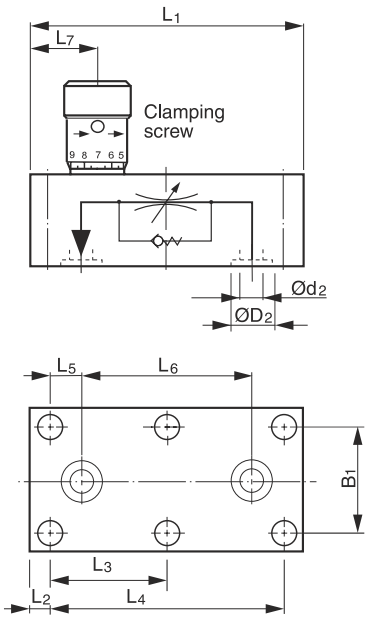

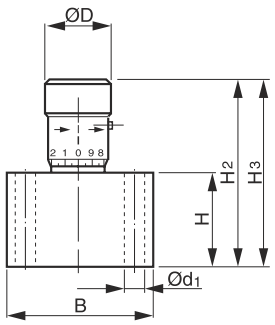

H2 = closed
H3 = opened

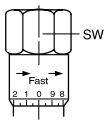

Hexagon adjusting knob, standard for size 1600

Size	L1	L2	L3	L4	L5	L6	L7	B	B1	H	H2	H3	Ød1	Ød2	ØD2	ØD	SW
400	85.9	6.4	–	72.8	9.3	54.2	21.3	44.5	33.3	28.4	57.7	62.7	6.8	7.1	13.3	20.6	–
600	101.6	6.4	–	88.9	10.4	68.0	25.4	50.8	38.1	31.8	67.8	73.4	7.0	8.6	16.0	25.4	–
800	117.3	6.4	–	104.9	12.7	79.5	44.5	57.2	44.4	44.5	95.0	102.6	7.0	11.9	19.1	30.0	–
1200	142.7	9.7	61.7	123.7	15.7	91.9	40.4	69.9	54.1	57.2	115.8	128.5	9.5	16.8	24.0	34.8	–
1600	171.5	12.7	73.2	146.1	19.1	107.9	49.3	76.2	60.4	69.9	158.2	175.3	9.5	22.4	32.0	–	47.5

2-way flow control valves series GFG2 are used to provide pressure compensated flow. The valve design compensates temperature variations to a certain extent.

The GFG is optionally equipped with a built-in check valve for the return flow.



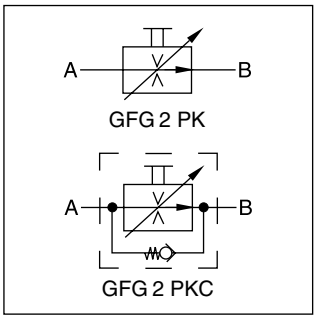

Design

The 2-way flow control valves are used with a triangular flow restrictor and a subsequent pressure compensator. The setting of the flow rate can be locked by a cylinder lock in the adjusting knob against unauthorized adjustment (option S).

Function

The fluid enters through port A through the flow restrictor. Downstream of the flow restrictor the pressure compensator is located. The control edges are provided by four radial bores in the poppet, which are fully open to port B in the neutral position.

Optionally the flow from A to B can be blocked by external pilot pressure applied to port P (option X). This can be used to avoid unintended initial movements of actuators.

The flow adjustment is done via the hand knob with an adjusting angle knob of 270°.

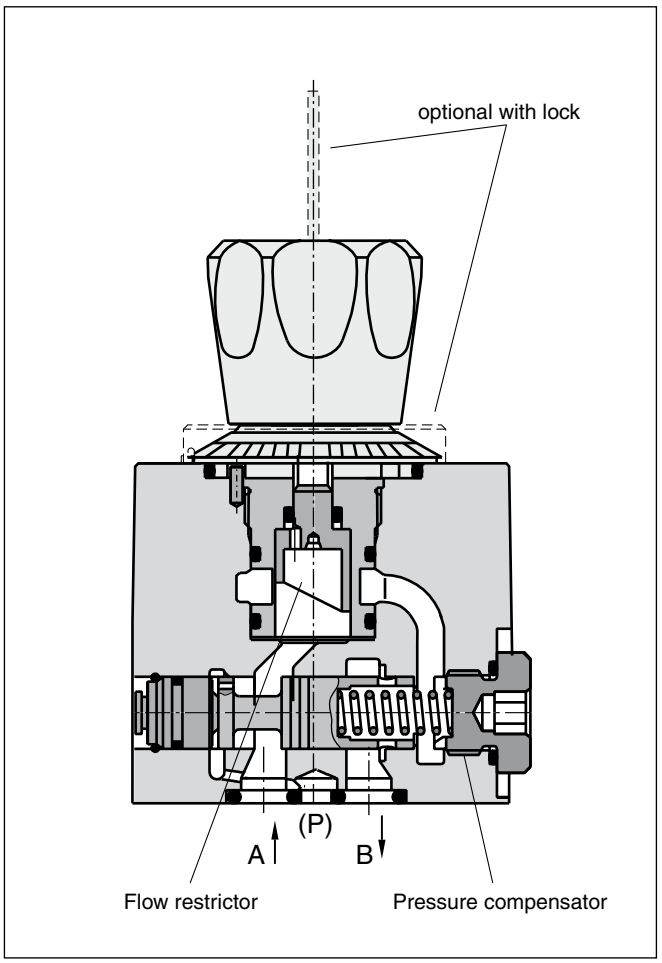

Features

- Flow rate independent of pressure and temperature
- Available for 7 different flow rates
- Good fine adjustment
- External port (P) to block flow from A to B
- Optional reverse flow check valve
- Turn knob with cylinder lock (option S)

Note

Rectifier plate and subplates see 'Accessories' at the end of this chapter.

Ordering code

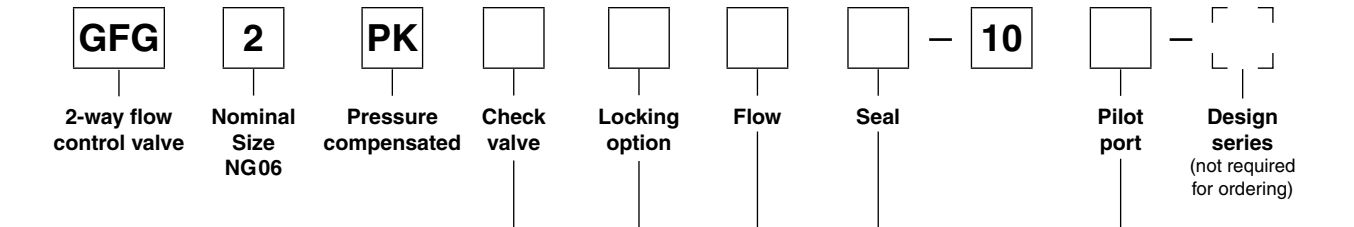

Code	Check valve
omit	**Without check valve**
C	**With check valve**

Code	Locking option
omit	**Standard without lock**
S	**With cylinder lock**

Code	Flow [l/min]
0.6	**0.015 to 0.6**
1.0	**0.015 to 1.0**
1.6	**0.015 to 1.6**
3.2	**0.025 to 3.2**
6.3	**0.025 to 6.3**
12.0	**0.080 to 12.0**
18.0	**0.080 to 18.0**

Code	Control of the pressure compensator
omit	**Standard internal**
X [1]	External

Code	Seal
omit	**NBR**
V	FPM

Bold letters =
Short-term availability

[1] Only in combination with integrated check valve.

5

Technical data

Design		Orifice, infinitely variable, pressure-compensated
Actuator		Manual flow rate adjustment
Mounting type		ISO 6263 code: ISO 6263-AB-03-4-B
Mounting position		unrestricted
$MTTF_D$ value	[years]	150
Weight	[kg]	1.1 (without subplate)
Ambient temperature	[°C]	-20...+60
Fluid		Hydraulic oil according to DIN 51524
Fluid temperature	[°C]	-20...+70 (NBR: -25...+70)
Viscosity, permitted	[cSt] / [mm²/s]	20 ... 400
recommended	[cSt] / [mm²/s]	30 ... 80
Filtering		ISO 4406 (1999); 18/16/13
Min. pressure difference	[bar]	5 (GFG*1.6/3.2), 8.5 (GFG*6.3/12/18)
Operating pressure	[bar]	A; B = 315 , P = 5 (GFG*, GFG*C), A, B, P = 160 (GFG*X)
Effect of pressure on Q_{max} at p = 160 bar	[%]	± 2 (GFG*1.6/3.2/6.3/12), ± 2.5 (GFG*18)
Flow direction A → B B → A		 Flow control function Throttle function or free flow through check valve

Performance curves

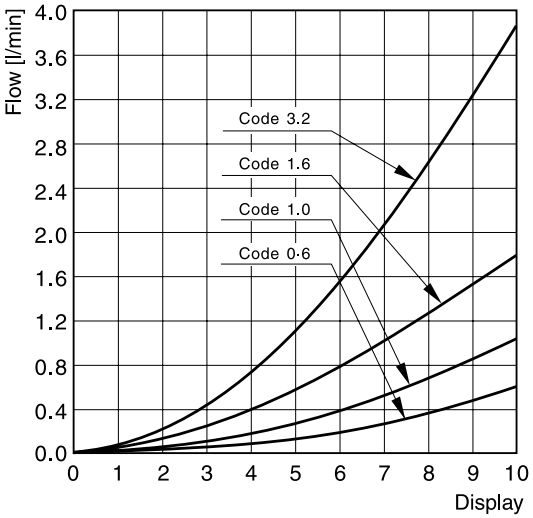

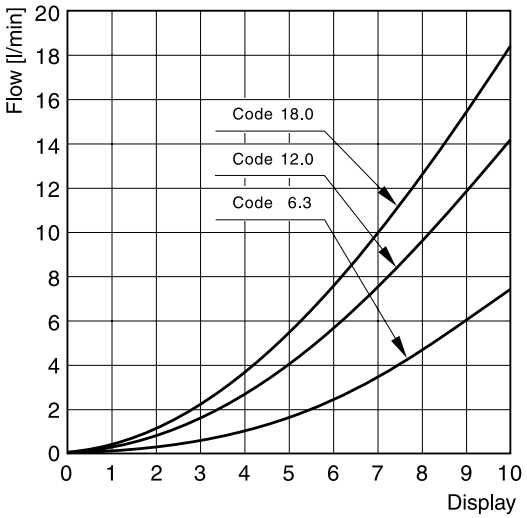

5

All characteristic curves measured with HLP46 at 50 °C.

Changes in pressure cause a change of pre-set flow rate. Flow rate deviations at Q_{max}: ± 2 %

Dimensions

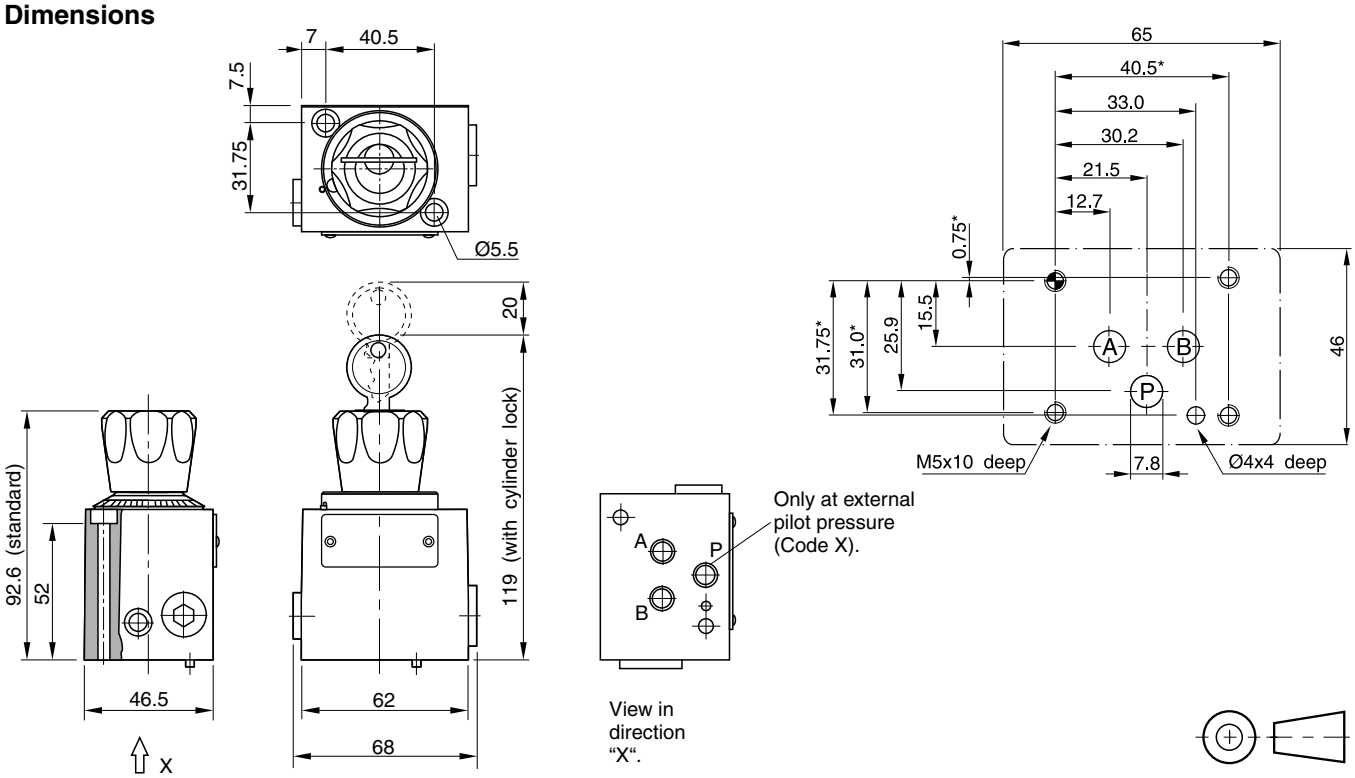

Bolt kits (Cylinder head ISO 4762-12.9 not included)

Nominal size Valve	Valve model	Quantity	Tightening torque [Nm]	Valve without rectifier plate		Valve with rectifier plate	
				Dimensions	Order No.	Dimensions	Order No.
NG06	GFG2	2	7.6 Nm	2x M5x60	BK380	2x M5x100	BK466

O-rings for sealing the connecting surface

Nominal size Valve	Valve model	Ports	Dimensions Ø-inner x cord thickness	Quantity	Seal kits	
					NBR	FPM
NG06	GFG2	A and B	9.25 x 1.78	3	SK-GFG2	SK-GFG2 FPM

Sandwich rectifier plate

If a 2-way flow control valve is used in combination with a rectifier plate the valve can be used for meter-in and meter-out flow control of an actuator.

Design

The intermediate rectifier plate is designed with 4 identical, symmetrically arranged check valves. Thus the differential pressure is the same in both flow directions.

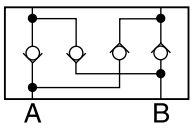

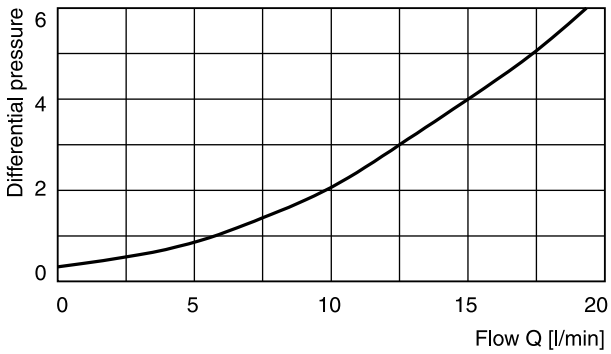

Measured with HLP46 at 50 °C.

5

Dimensions

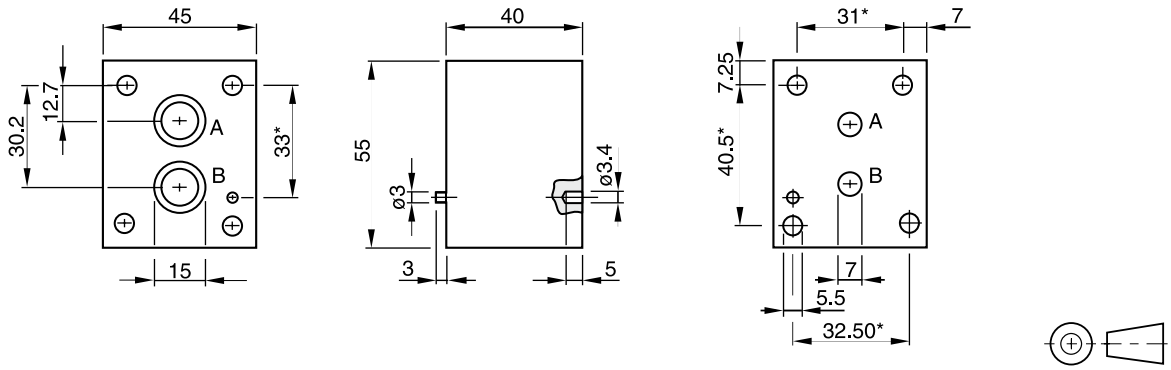

Dimension tolerances
* : ± 0.1mm
others : ± 0.2 mm
holes and silhouette of valve body : untoleranced dimension

Ordering code: HR OA 06 C

O-ring for sealing the connecting surface

Connections	Dimensions	required units
A, B	12 x 1.5	2

Subplates [1)]

Ordering code	
SPD 22 B 910	P, A, B and T = G1/4
SPD 23 B 910	P, A, B and T = G1/8

[1)] Details see chapter 12, series SPD.

2-way flow control valves series 2F1C provide pressure and viscosity compensated flow from port A to port B. The counter direction is blocked (standard) or can be open via an integral reverse flow check valve (optional).

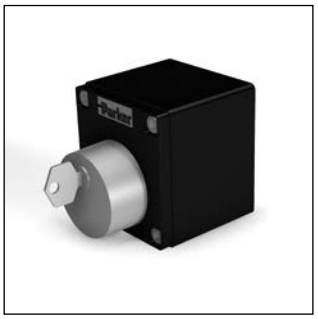

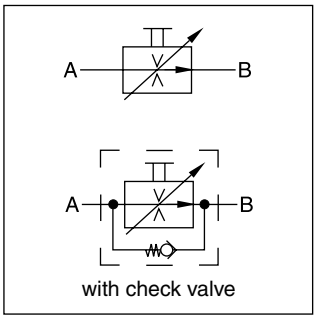

Function

The compensator spool is located in front of the metering spool. The metering spool is closed in the neutral position to avoid undesired initial actuator motion. The oil flow to open the metering spool has to pass a needle valve (not shown in the sectional drawing). The needle valve can be adjusted from the front panel to set the response time of the 2F1C.

The metering spool is adjusted by the main control knob. The key lock has three positions:

Lock: Adjustment is locked.

Adjust: Full adjustment is permitted.

Trim: Fine adjustment of ±5 % is possible.

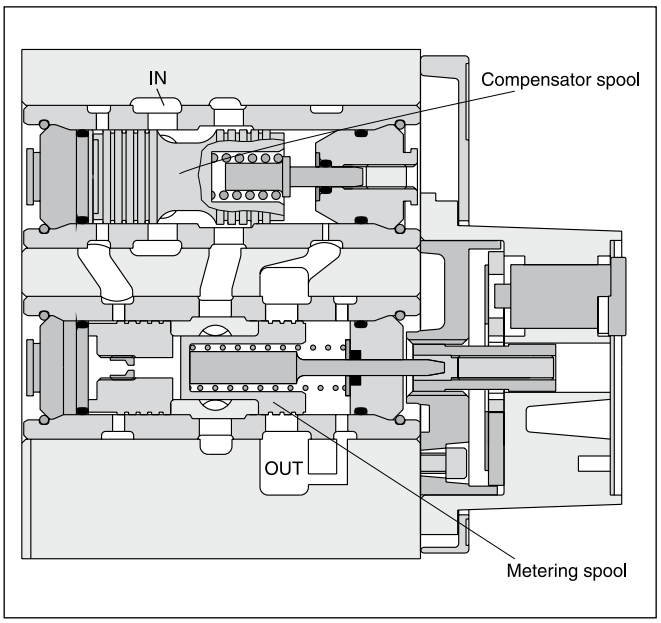

Features

- 2-way flow control valve
- Subplate mounting according to ISO 6263
- Excellent fine adjustment
- Adjustable response time
- Closed in neutral position
- Optional reverse flow check valve
- 2 sizes, NG10 (3/8“), NG16 (3/4“)

Ordering code

2F1C	☐	–	01	B	5	☐	☐
2-way flow control valve	Size		Adjustment knob with lock	Design series	Seal FPM	Reverse flow check	Options

Code	Size
02	NG10 (3/8”)
03	NG16 (3/4”)

Code	Check valve
0	without check
C	with check

General				
Design			Orifice, infinitely variable, pressure-compensated	
Actuator			Manual flow rate adjustment	
Mounting type			ISO 6263	
Mounting position			unrestricted	
$MTTF_D$ value		[years]	150	
Weight		[kg]	6.0 (2F1C02), 9.0 (2F1C03)	
Ambient temperature		[°C]	-20...+60	
Fluid			Hydraulic oil according to DIN 51524	
Fluid temperature		[°C]	-20...+70	
Viscosity,	permitted	[cSt] / [mm²/s]	20 ... 400	
	recommended	[cSt] / [mm²/s]	30 ... 80	
Filtering			ISO 4406 (1999); 18/16/13	
Min. pressure difference		[bar]	see diagram	
Max. operating pressure			**2F1C02**	**2F1C03**
	Port A	[bar]	14...280	14...350
	Port B	[bar]	0...270	0...340
Flow direction				
	A → B		Flow control function	
	B → A		blocked or free flow through check valve	

5

5

Performance curves

Flow / knob adjustment characteristics at 210 bar

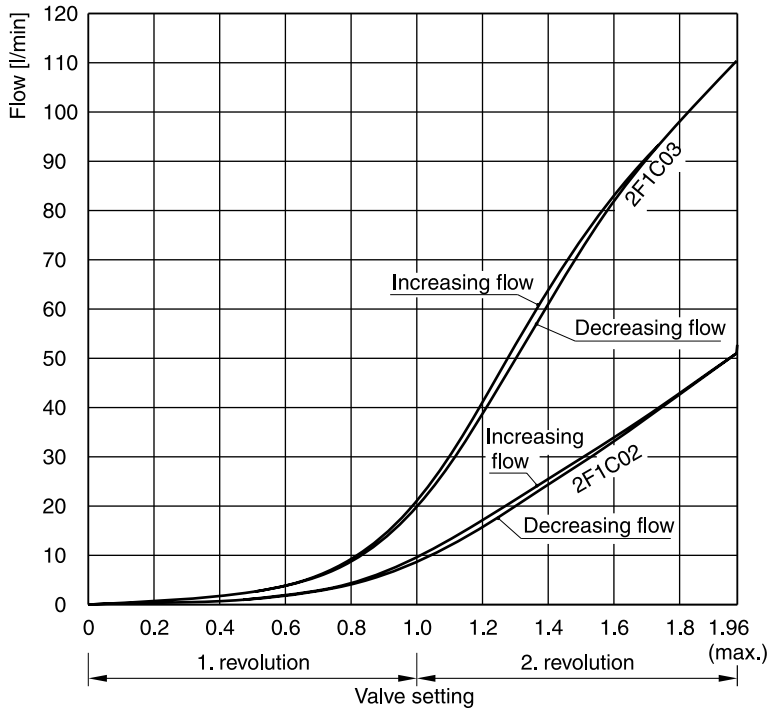

Flow / pressure drop curves

Constant inlet pressure – variable outlet pressure

2F1C02

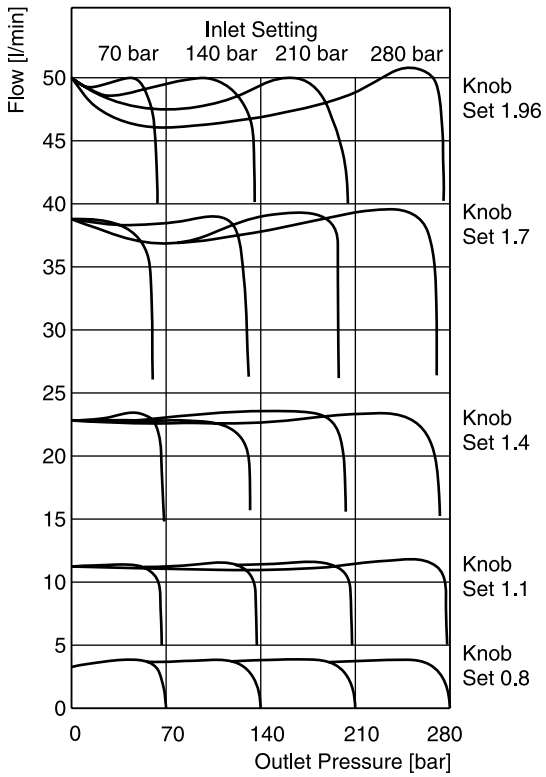

2F1C03

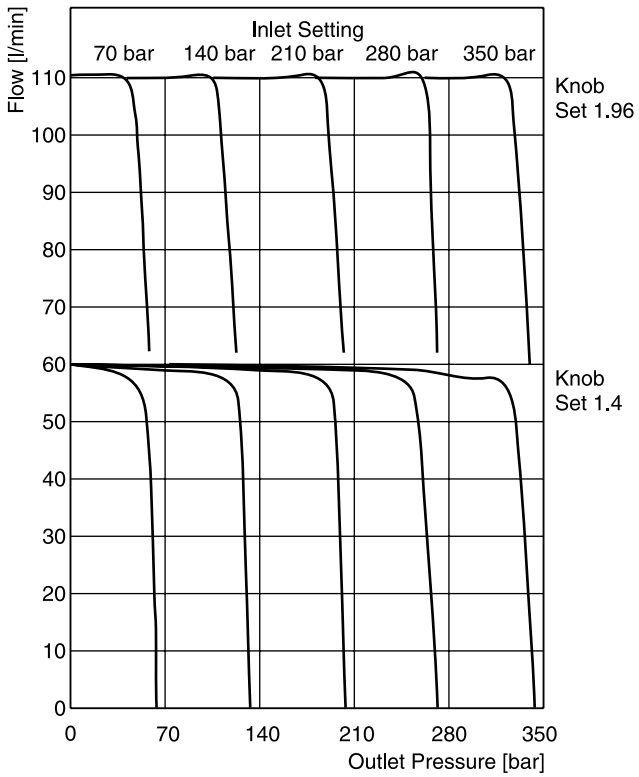

All characteristic curves measured with HLP46 at 50 °C.

Δp/Q performance curves

for reverse flow direction
2F1C02 at 280 bar
2F1C03 at 350 bar

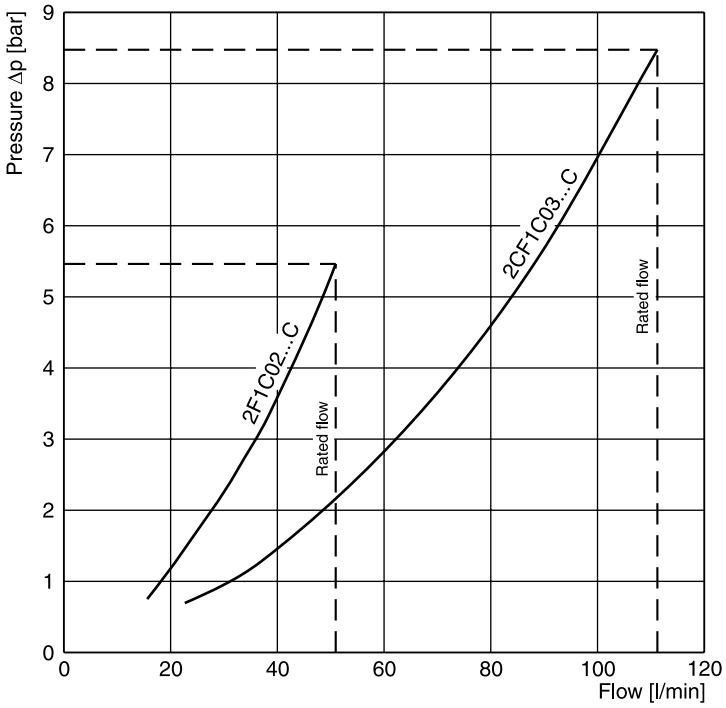

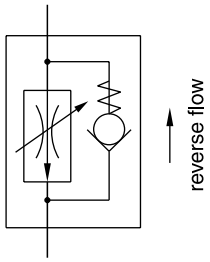

5

Minimum pressure difference curves

2F1C02

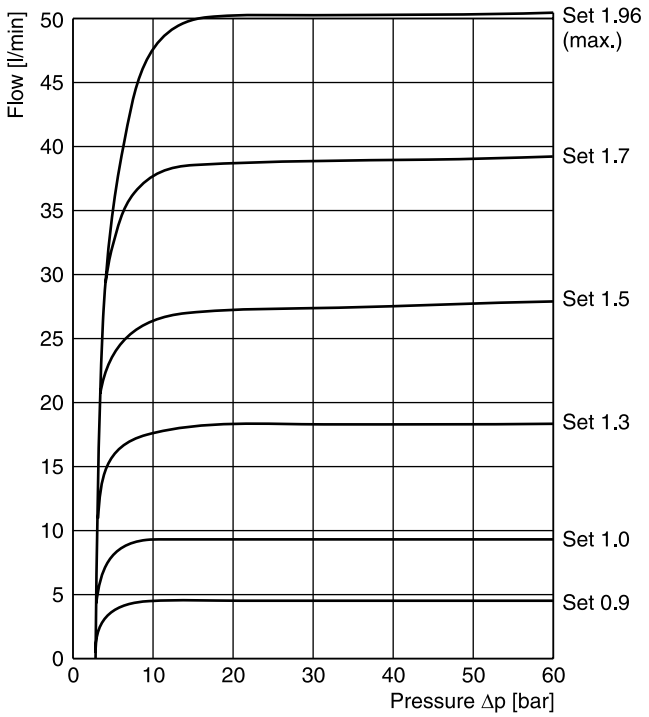

2F1C03

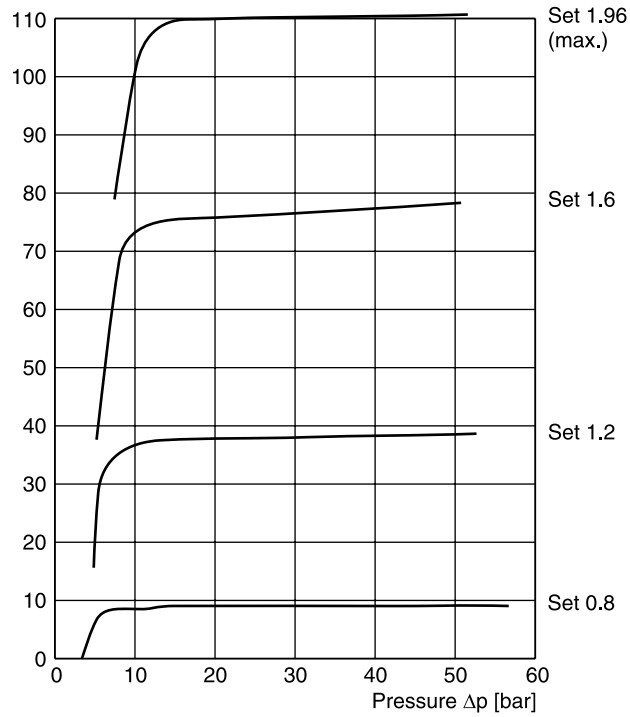

All characteristic curves measured with HLP46 at 50 °C.

Leakage / pressure curves

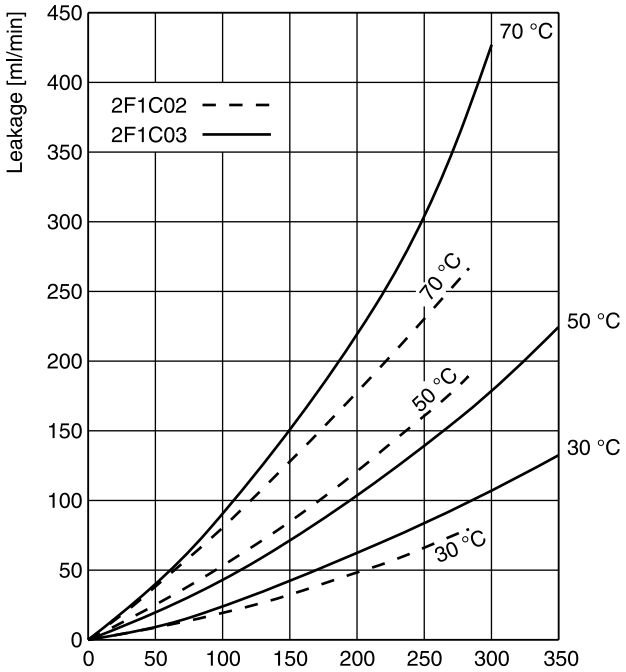

5

Flow / temperature curves at 210 bar

2F1C02

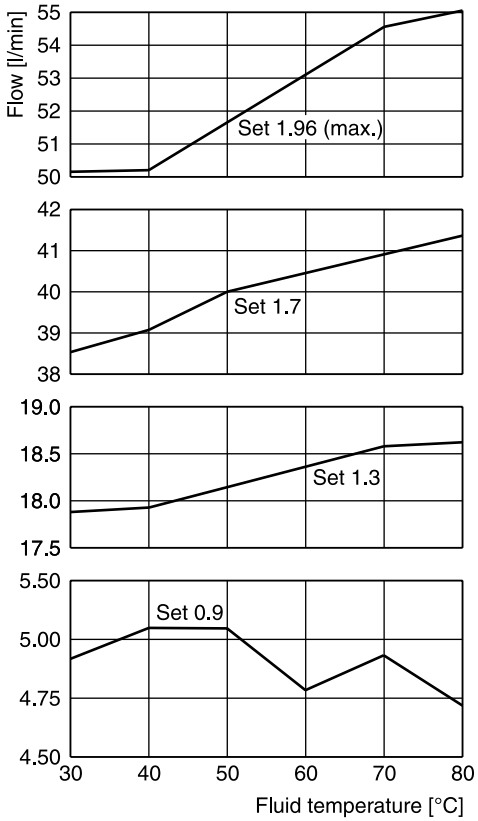

2F1C03

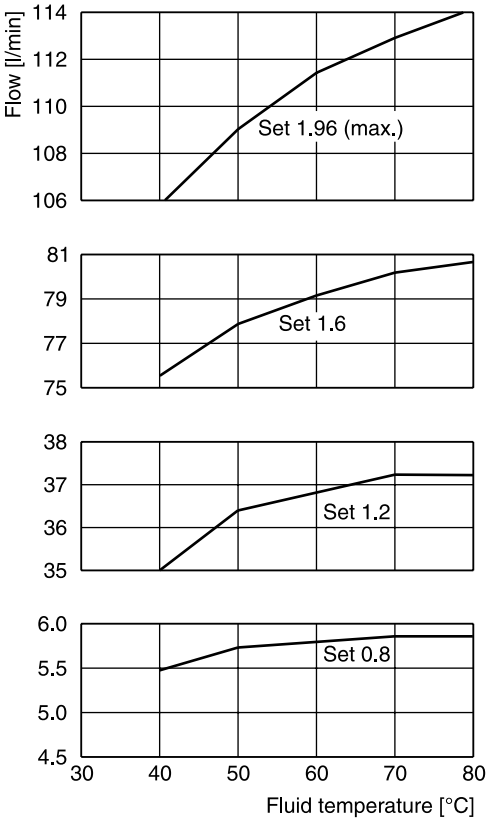

All characteristic curves measured with HLP46 at 50 °C.

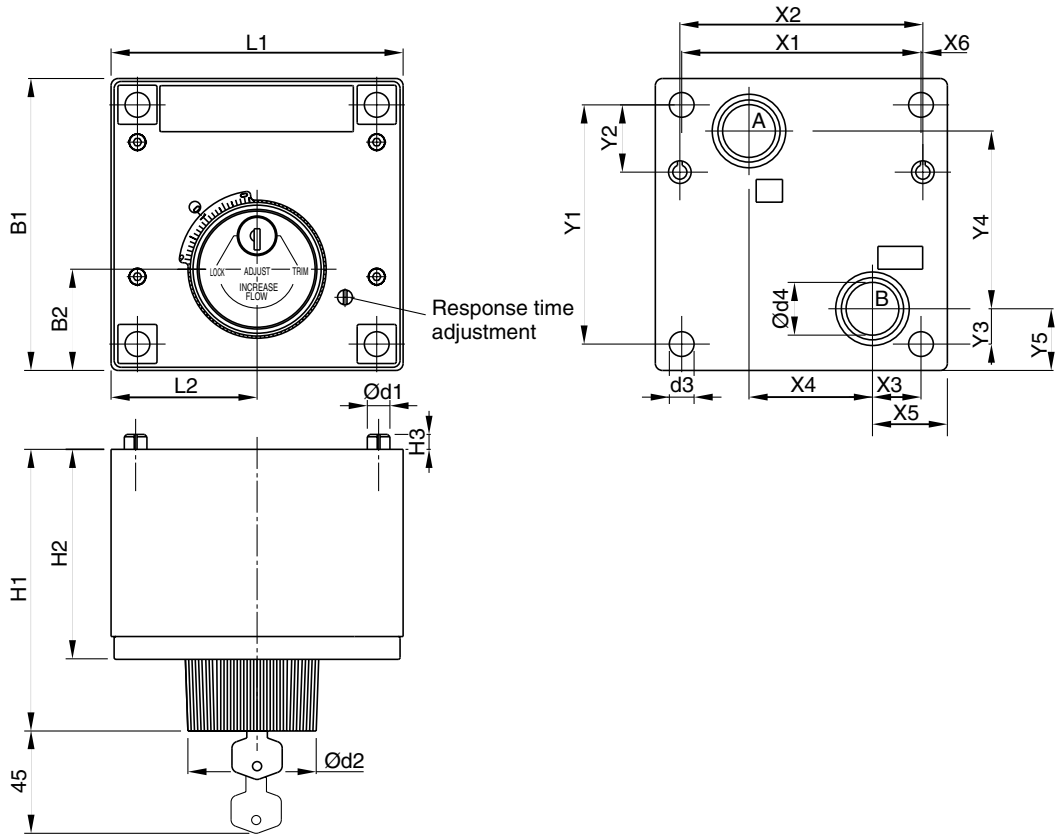

5

Size	ISO-code	x1	x2	x3	x4	x5	x6	y1	y2	y3	y4	y5
02	6263-AM-07-2-A	76.2	79.4	9.5	44.5	19	–	82.5	23.8	30.2	41.3	39.7
03	6263-AK-06-2-A	101.6	103.2	20.6	52.4	31.8	0.8	101.6	28.6	15.1	75.4	26.2

Size	ISO-code	B1	B2	H1	H2	H3	L1	L2	d1	d2	d3	d4
02	6263-AM-07-2-A	101.6	38.1	119.6	87.4	6.4	95.2	47.6	6.4	57.2	8.7	14.2
03	6263-AK-06-2-A	124	42.9	121.4	89.2	6.4	124	62	9.5	57.2	10.5	22.4

NG	ISO-code	Bolt kit - ISO 4762-12.9		Kit	Surface finish
02	6263-AM-07-2-A	BK538 4x M8x95	31.8 Nm ±15 %	on request	R_{max}6.3 ▱ 0.01/100
03	6263-AK-06-2-A	BK539 4x M10x95	63 Nm ±15 %		

Proportional flow control valves of the series DUR*L06 are used to generate pressure-compensated flow from A to B. The valve is equipped with a built-in check valve for the return flow.

For meter-in and meter-out control of an actuator a rectifier plate can be used.



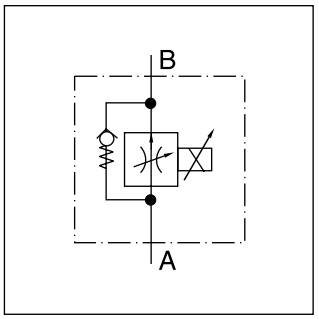

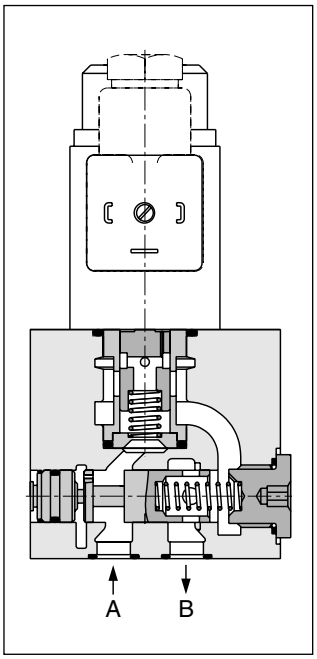

5

Function

When solenoid current is applied, the metering spool opens against the reset spring and the flow is regulated by the pressure compensating spool to port B.

With the aid of the pressure compensating spool, the pressure drop is held constant on the metering window. Thus pressure load changes are compensated, and the oil flow remains constant.

In combination with the digital electronic module PCD00A-400 the valve parameters can be saved changed and duplicated.

Features

- Low hysteresis
- High reproducibility
- Load-independent oil flow
- Bypass check valve
- Mounting pattern to ISO 6263
- 4 flow rates

Note

Rectifier plate and subplates see ‘Accessories’ at the end of this chapter.

Ordering code

DUR		L	06	P	K		1	–	
2-way flow control valve with bypass check valve	Nominal flow	Linear solenoid 24 V / 0.68 A	Size NG06	Progressive performance curve		Seal			Design series (not required for ordering)

Code	Flow [l/min]
1,6	1.6
6,3	6.3
12	12.0
18	18.0

Code	Seal
A	NBR
1	FPM

Technical data

Design		Electrically adjustable orifice valve with load sensing
Mounting type		Subplate NG06, interface DIN 24340, ISO, CETOP
Mounting position		Unrestricted, horizontal mounting preferred
Ambient temperature	[°C]	-20...+60
$MTTF_D$ value	[years]	150
Weight	[kg]	1.6
Type of voltage	[V]	24
Solenoid nominal current	[mA]	680
Duty cycle		100 % ED
Solenoid connection		Connector as per EN 175301-803
Protection class		IP 65 in accordance with EH60529 (with correctly mounted plug-in connenctor)
Amplifier module		PCD00A-400
Operating pressure	[bar]	max. 210
Fluid		Hydraulic oil according to DIN 51524
Fluid temperature	[°C]	-20...+70 (NBR: -25...+70)
Viskosität, permitted recommended	[cSt] / [mm²/s] [cSt] / [mm²/s]	20 ... 400 30 ... 80
Filtration		ISO 4406 (1999); 18/16/13
Min. pressure difference	[bar]	DUR 1.6/: 3; DUR 6.3/12: 5; DUR 18: 8
Hysteresis at Q_{nom}	[%]	6
Hysteresis at $Q \leq 20\ \% \bullet Q_{nom}$	[%]	6
Repeatability at $\Delta U_{set} = 5$ V	[%]	2

5

Performance curves

DUR 1.6 L 06 PK*



DUR 12 L 06 PK* / DUR 18 L 06 PK*



DUR 6.3 L 06 PK*



All characteristic curves measured with HLP46 at 50 °C.

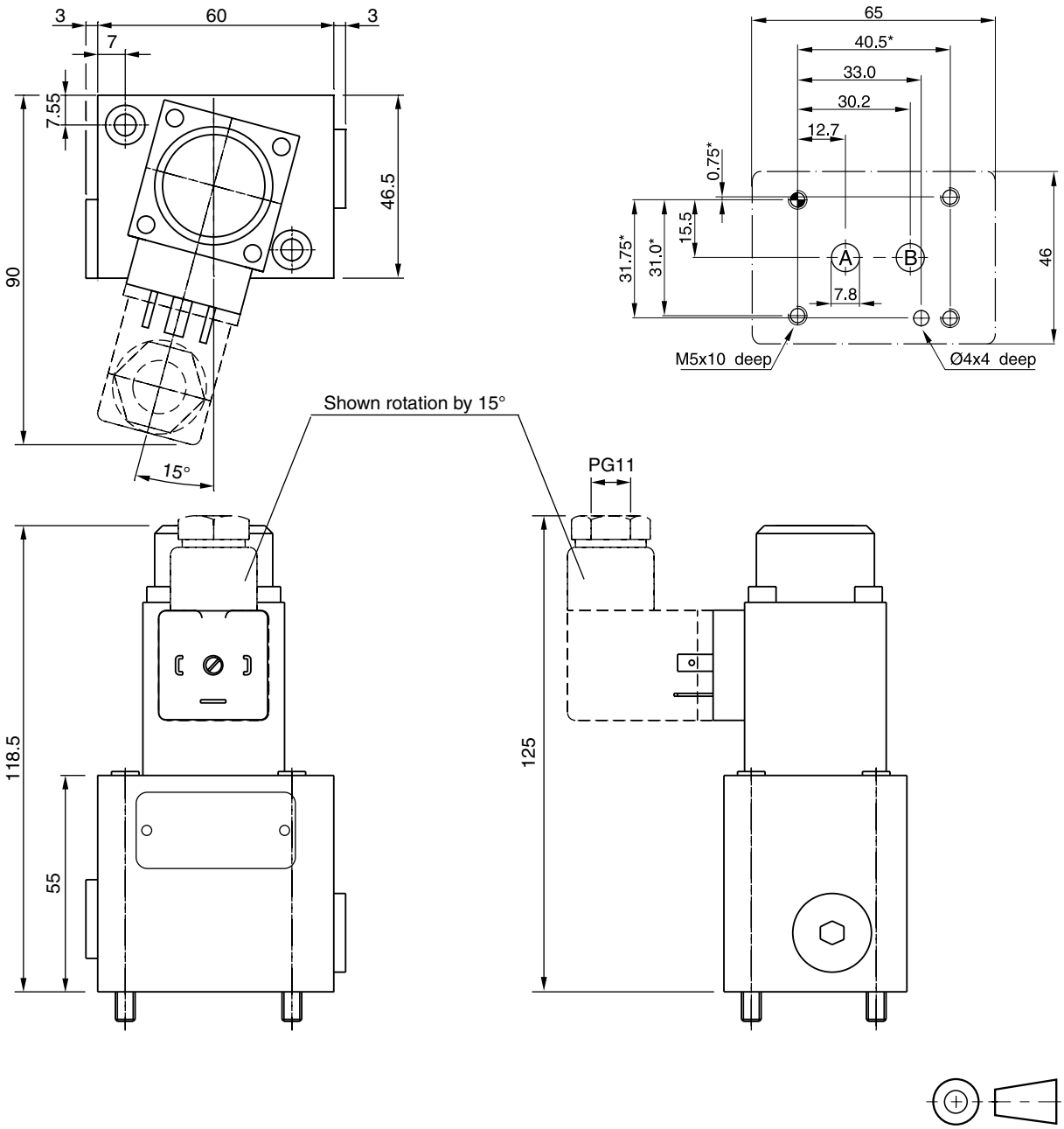

Bolt kits (Cylinder head ISO 4762-12.9 not included)

Nominal size Valve	Valve model	Quantity	Tightening torque [Nm]	Valve without rectifier plate		Valve with rectifier plate	
				Dimensions	Order No.	Dimensions	Order No.
NG06	DUR*L06	2	7.6 Nm	2x M5x60	BK380	2x M5x100	BK466

Seal kits

NBR	FPM
SK-DUR***L	SK-DUR***L FPM

Sandwich rectifier plate

If a 2 way flow control valve is used in combination with a rectifier plate the valve can be used for meter-in and meter-out flow control of an actuator.

Design

The intermediate rectifier plate is designed with 4 identical, symmetrically arranged check valves. Thus the differential pressure is the same in both flow directions.

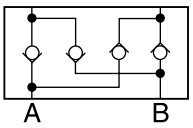

Δp/Q-curve

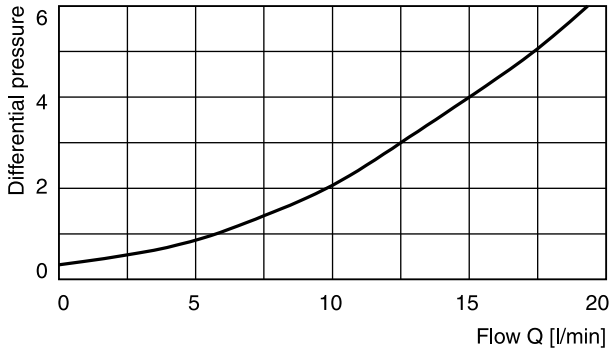

Measured with HLP46 at 50 °C.

5

Dimensions

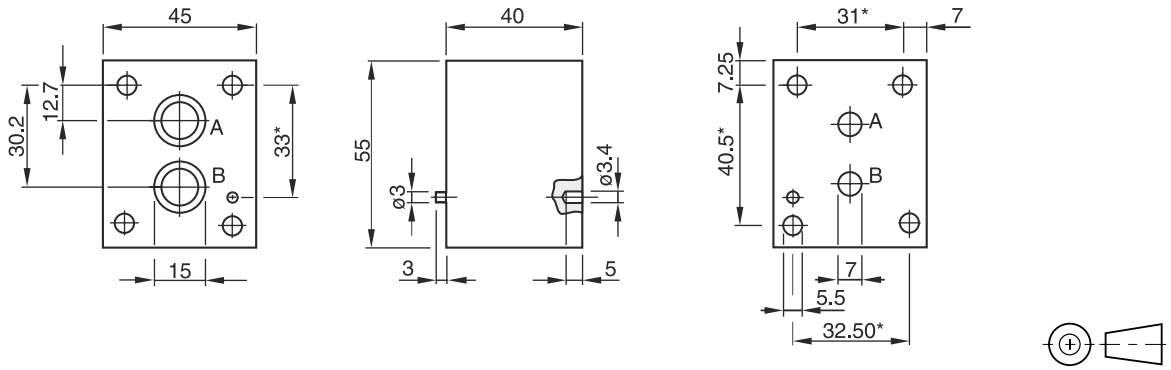

Dimension tolerances
* : ± 0.1mm
others : ± 0.2 mm
holes and silhouette of valve body : untoleranced dimension

Ordering code: HR OA 06 C

O-ring for sealing the connecting surface

Connections	Dimensions	required units
A, B	12 x 1.5	2

Subplates [1)]

Ordering code	
SPD 22 B 910	P, A, B and T = G1/4
SPD 23 B 910	P, A, B and T = G1/8

[1)] Details see chapter 12, series SPD.

5

Series	Description	Size											Mounting			Page
	Parker Standard DIN / ISO	1/8	1/4	3/8	1/2	3/4	1	06	10	16	25	32	Subplate	Screw-in	Slip-in	
	Shuttle valves															
SSR								•	•					•		6-2
	Check valves, direct operated															
RK / RB		•	•	•	•									•		6-4
CS			•	•	•	•	•						•			6-7
SPZBE										•	•	•			•	6-9
SPV / SPZ								•	•					•		6-11
C4V									•		•	•	•			6-13
	Check valves, pilot operated															
C4V									•		•	•	•			6-18
	2/2-way seat valves															
D4S									•		•	•	•			6-21
	Accessories															
	Plugs															6-31

6

More check valves are presented in the following chapters:
Chapter 7: Sandwich Valves
Chapter 8: Slip-In Cartridge Valves
Chapter 9: SAE Flange Valves
Chapter 10: Valves for Pipe Mounting

The shuttle valve series SSR is designed as a threaded cartridge valve. All parts are assembled in one unit and easy to mount.



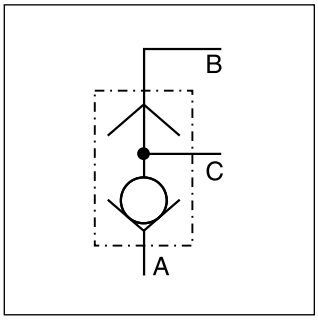

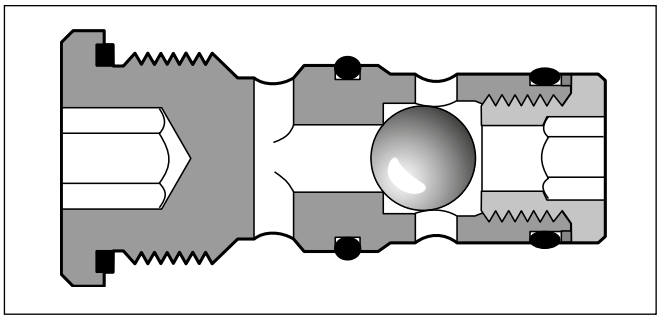

Features

- Little space required
- Leak-free
- Easy assembly

6

Ordering code

	–	SSR	B	080	E	
Seal		Shuttle valve	Design series	Factory norm, direct operated	Threaded cartridge	Valve size

Code	Seal
omit	**NBR**
V	FPM

Code	Size
06	**NG06**
10	**NG10**

Bold letters =
Short-term availability

Technical data

General				
Design			Threaded cartridge valve	
Mounting position			Unrestricted	
Ambient temperature		[°C]	-20 ... +60	
Nominal size			NG06	NG10
Weight		[kg]	0.5	0.8
Hydraulic				
Flow direction			See symbols	
Fluid			Hydraulic oil as per DIN 51524	
Fluid temperature		[°C]	-20...+70 (NBR: -25...+70)	
Viscosity,	permitted	[cSt] / [mm²/s]	20 ... 400	
	recommended	[cSt] / [mm²/s]	30 ... 80	
Filtration			ISO 4406 (1999); 18/16/13	
Nominal pressure		[bar]	350	
Flow		[l/min]	40	60

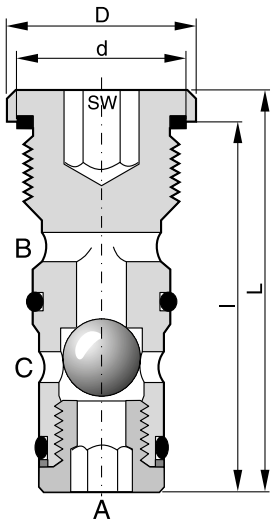

Dimensions	NG06	NG10
D	23	29
L	48	70
d	M18x1.5	M24x1.5
l	42.5	64
SW	8	12
Tightening torque [1] [Nm] ± 15 %	40	65

Mounting cavity

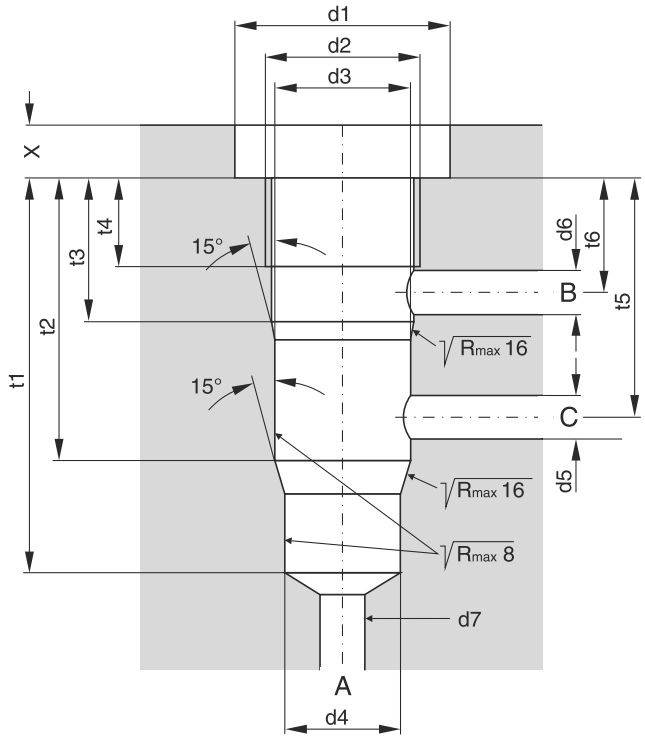

Dimensions	NG06	NG10
d1	25	35
d2	M18 x 1.5	M24 x 1.5
$d3^{H7}$	16	22
$d4^{H7}$	14	20
$d5_{max.}$	6	9
$d6_{max.}$	6	9
$d7_{max.}$	13.5	19.5
t1	45	68
t2	32	51
t3	16	20
t4	10	15
t5	27.5	40
t6	12	14.5
X	6	7

Seal kits

NG	NBR seals	FPM seals
06	SK-SSRB0E06	SK-SSRB0E06V
10	SK-SSRB0E10	SK-SSRB0E10V

[1] Please note the material specification for tightening torque in chapter 12, "accessories"

The check valves series RK and RB are designed to go into simple, threaded cavities. The connection is O-ring sealed on the 118° shoulder in the mounting cavity.

The valve body is supplied as a unit, with a spring loaded, hardened and polished semisphere of stainless bearing steel inside. The seat is also hardened and ground.





Type RK



Type RB

Ordering code

R		
Check valve, screwable	**Mounting direction**	**Size**

Code	Mounting direction
K	**in the blocked direction**
B	**in open flow direction**

Code	Flow [l/min]	Thread	Seal
0 [1]	**10**	**G1/8A**	**NBR**
1	**20**	**G1/4A**	**NBR**
2	**50**	**G3/8A**	**NBR**
3	**80**	**G1/2A**	**NBR**

Bold letters =
Short-term availability

[1] Only series RK available.

Technical data

Series design with pipe thread

General								
Code			RK0	RK1	RK2	RK3	RB1	RB2	RB3
Flow		[l/min]	10	20	50	80	20	50	80
Operating pressure		[bar]	700	700	700	500	700	700	500
Opening pressure		[bar]	0.15	0.18	0.2	0.25	0.15	0.07	0.17
Thread (DIN ISO 228/1)			G1/8A	G1/4A	G3/8A	G1/2A	G1/4A	G3/8A	G1/2A
Tightening torque* ±20 %		[Nm]	10	15	20	40	15	20	40
Weight		[g]	5	5	15	15	5	15	20
Mounting position			unrestricted						
Ambient temperature		[°C]	-20 ... +60						
Hydraulic									
Fluid			Hydraulic oil according to DIN 51524						
Fluid temperature		[°C]	-25...+70						
Viscosity,	permitted	[cSt] / [mm²/s]	20 ... 400						
	recommended	[cSt] / [mm²/s]	30 ... 80						
Filtration			ISO 4406 (1999); 18/16/13						

* In case of strong vibration, it is recommended to secure the mounting threads.

Δp/Q performance curves

Type RK

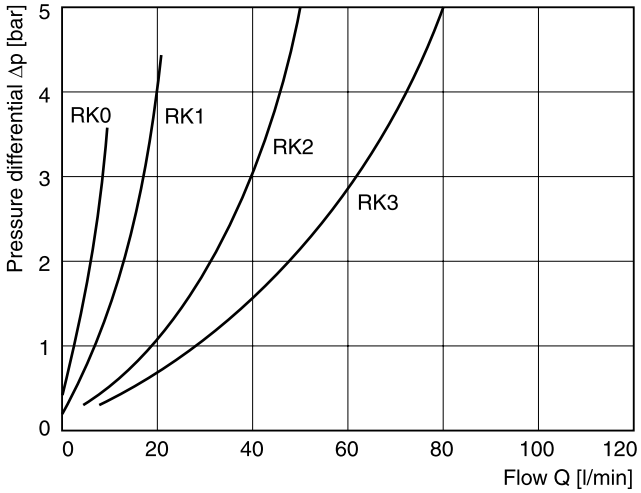

Type RB

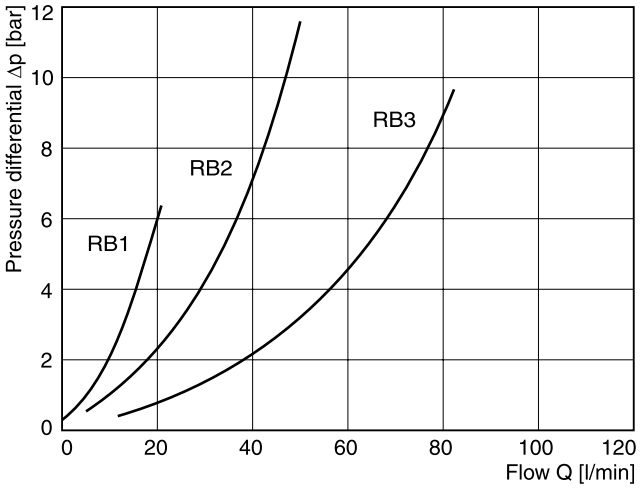

All characteristic curves measured with HLP46 at 50 °C.

6

Mounting direction

Type RK

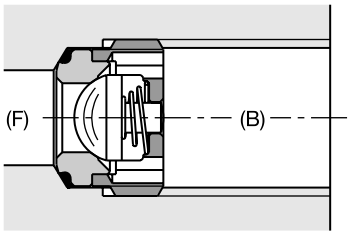

Screwed in, in the blocked direction

Type RB

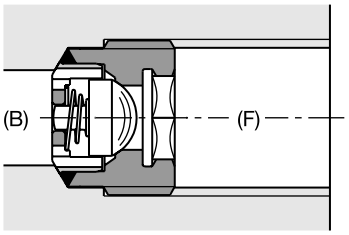

Screwed in, in the open flow direction

Mounting tool

Type RK

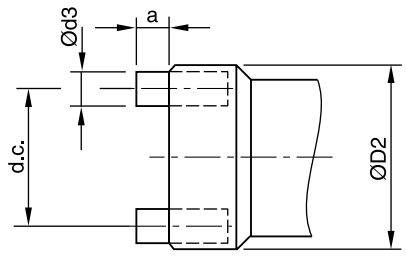

Type	Ordering number	D_2	a	d_3
RK0	5005216	8.6	2	1.5
RK1	5005217	11.5	2.5	2
RK2	5005218	15	2	2.5
RK3	5005219	18.8	4	3.5

Type RK

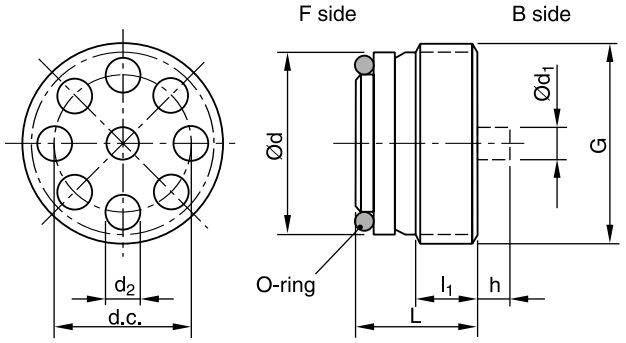

Type	Thread	L	l_1	d	d_1	d_2	h	d.c.	O-ring	Nm
RK0	G1/8A	7.2	3.8	8.6	2	1.5	1.3	6.8	6x1	8
RK1	G1/4A	9	4.5	11.5	2.6	2.2	1.5	$8.8_{-0.1}$	9x1	15
RK2	G3/8A	11.5	6.5	15	3.4	3	2.5	11	11x1.5	20
RK3	G1/2A	13.5	8	18.5	4.3	3.8	3	$14.2_{-0.1}$	14x1.5	40

Type RB

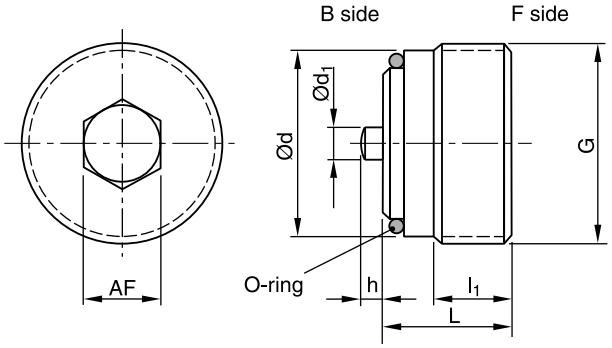

Type	Thread	L	l_1	d	d_1	h	AF	O-ring	Nm
RB1	G1/4A	10.3	5.5	11.6	2.2	1.3	5	9x1	15
RB2	G3/8A	11.5	7.0	15	3	2	6	11x1.5	20
RB3	G1/2A	13.15	8	18.5	3.4	2.5	8	14x1.5	40

Type RK

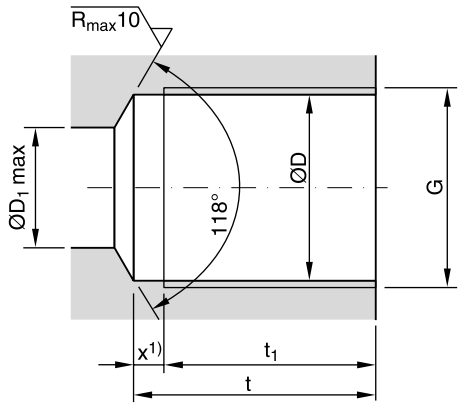

Type	Thread	D	D_1	t	t_1 2)	x 1)
RK0	G1/8	8.7	5	16	13.7	2.3
RK1 and RB1	G1/4	11.8	8	22	19	3
RK2 and RB2	G3/8	15.25	9	24.5	21.5	3
RK3 and RB3	G1/2	19	12	29	25.5	3.5

Type RB

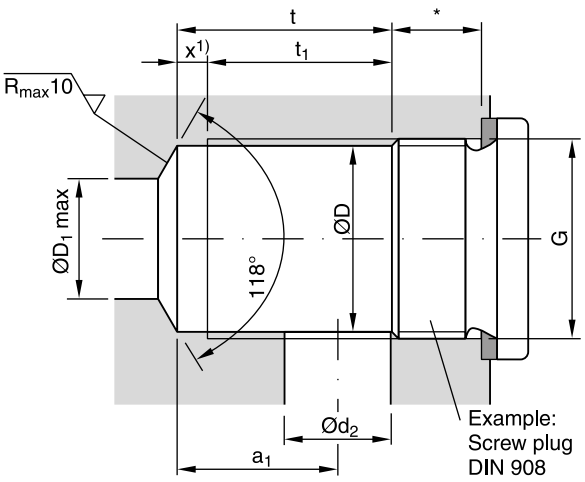

Type	Thread	D	D_1	t	t_1 2)	x 1)	a_1	d_2
RK0	G1/8	8.7	5	12.3	10	2.3	9.5	5
RK1 and RB1	G1/4	11.8	8	14	11	3	11	6
RK2 and RB2	G3/8	15.25	9	17	14	3	13	8
RK3 and RB3	G1/2	19	12	22	18.5	3.5	16	12

Mounting cavity

- for connecting in combination with tube fitting
- for internal line channels

* Required depth depending on type of screw plug, connecting plate etc. used.

1) Thread runout x must be maintained. It may be smaller, but not larger (requirement for a perfect seal using the O-ring).

2) Fully cut-out thread

Manatrol check valves of the series CS for subplate mounting provide free flow in one direction and block flow in the counter direction.

Specific Manatrol poppets and poppet guides ensure reliable functional integrity even at high flow rates and/ or pulsations.

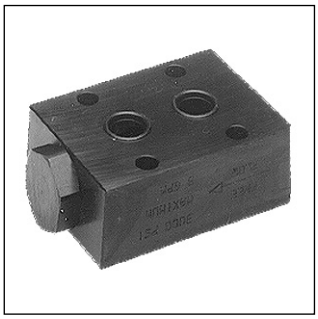

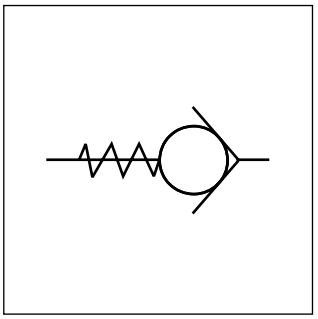

Ordering code

CS		S		
Manifold design	Nominal size	Steel body	Opening pressure	Seal

Code	Size
400	**400 (1/4)**
600	**600 (3/8)**
800	**800 (1/2)**
1200	**1200 (3/4)**
1600	1600 (1)

Code	Seal
omit	**NBR**
V	FPM

Code	Pressure [bar]
omit	**0.35**
65	4.5

Bold letters =
Short-term availability

Technical data

General						
Size		**400**	**600**	**800**	**1200**	**1600**
$MTTF_D$ value	[years]	150				
Weight	[kg]	0.5	0.7	1.0	2.3	3.5
Ambient temperature	[°C]	-20 ... +60				
Hydraulic						
Operating pressure	[bar]	210	210	210	210	210
Pressure drop Δp	[bar]	10	10	10	1	1
Flow	[l/min]	65	110	155	112	160
Fluid		Hydraulic oil as per DIN 51524				
Fluid temperature	[°C]	-20...+70 (NBR: -25...+70)				
Viscosity, permitted	[cSt] / [mm²/s]	20 ... 400				
recommended	[cSt] / [mm²/s]	30 ... 80				
Filtration		ISO 4406 (1999); 18/16/13				

Δp/Q performance curves

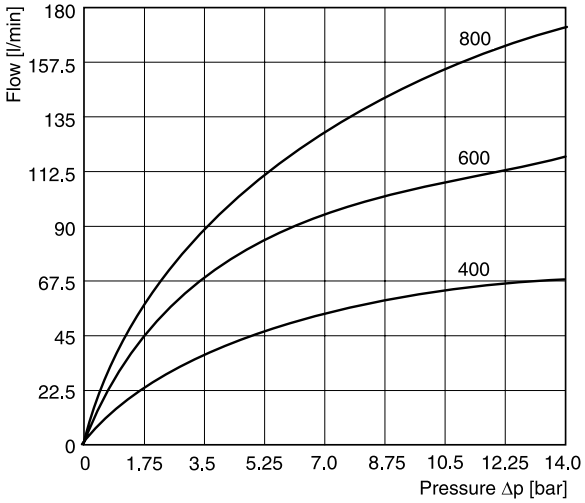

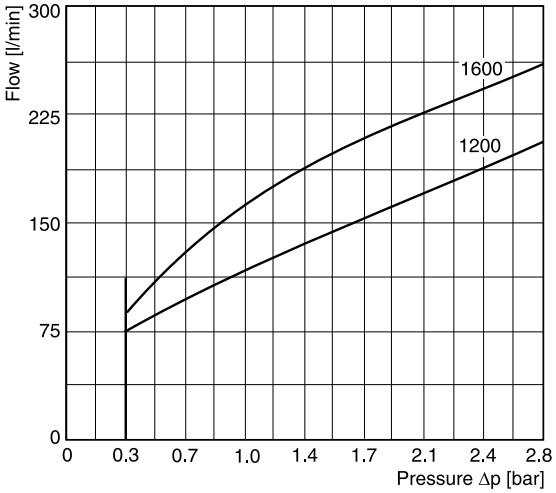

All characteristic curves measured with HLP46 at 50 °C.

6

Dimensions

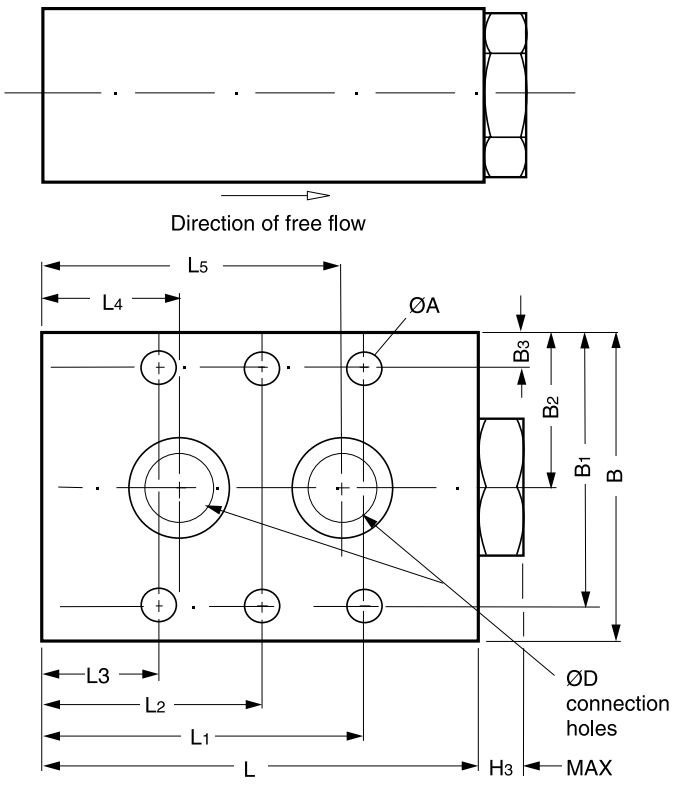

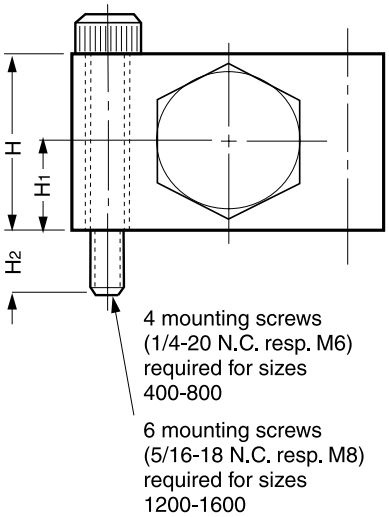

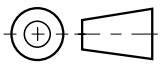

Size	ØD	ØA	L	L1	L2	L3	L4	L5	B3	B2	B1	B	H	H1	H2	H3	Weight [kg]
CS 400S	7.1	6.35	63.5	49.0	–	14.2	19.1	44.5	5.3	22.1	38.9	44.5	22.1	10.9	9.9	7.9	0.5
CS 600S	10.2	6.35	69.9	51.6	–	18.0	22.1	47.5	6.4	25.4	44.5	50.8	25.4	12.7	13.0	8.1	0.7
CS 800S	11.9	6.35	80.7	59.4	–	21.3	25.4	55.6	6.4	28.4	50.8	57.2	31.8	15.7	13.2	8.1	1.0
CS 1200S	17.3	8.5	103.9	89.9	51.8	13.7	25.1	79.2	7.9	34.8	61.7	69.9	44.5	22.1	14.5	10.7	2.3
CS 1600S	22.1	8.5	127.0	111.0	63.5	15.7	34.8	91.9	7.9	38.1	68.1	76.2	50.8	25.4	14.5	10.7	3.5

The check valves series SPZBE are slip-in cartridge valves. The function unit is fixed inside the manifold by a hexagonal plug with slot.

The design is based on CE series with same poppet and sleeve. The different mounting cavity has to be considered.



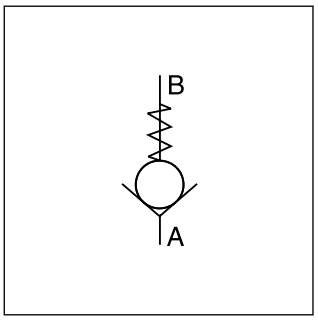

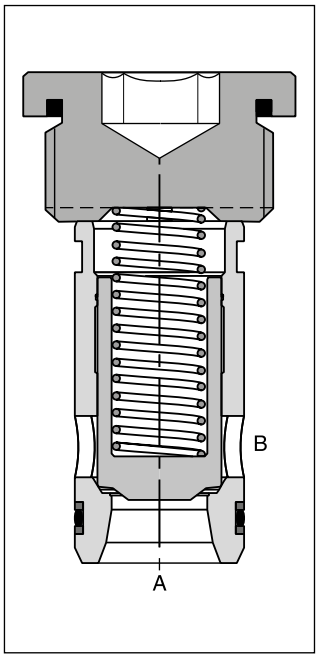

Features

- Little space required
- Leak-free from port B to A
- 4 different opening pressures

Ordering code

	–	SP	Z	BE	1010	E		
Seal		Check valve	Flow direction A to B	Design series, screwed cover	Factory norm, poppet, direct operated	Slip-in valve	Valve size	Opening pressure

Code	Seal
omit	**NBR**
V	FPM

Code	Size
16	**NG16**
25	**NG25**
32	**NG32**
40	**NG40**
50	**NG50**

Code	Pressure [bar]
L	0.1
N	**0.5**
S	1.6
U	4.0

Bold letters =
Short-term availability

Technical data

General						
Design		Threaded cartridge valve				
Mounting position		Unrestricted				
Ambient temperature	[°C]	-20 ... +60				
$MTTF_D$ value	[years]	150				
Nominal size		**NG16**	**NG25**	**NG32**	**NG40**	**NG50**
Weight	[kg]	0.25	0.5	1.2	3.1	5.2
Hydraulic						
Flow direction		Port A to B				
Fluid		Hydraulic oil according to DIN 51524				
Fluid temperature	[°C]	-20...+70 (NBR: -25...+70)				
Viscosity, permitted	[cSt]/[mm²/s]	20 ... 400				
recommended	[cSt]/[mm²/s]	30 ... 80				
Filtration		ISO 4406 (1999); 18/16/13				
Nominal pressure	[bar]	350				
Opening pressure	[bar]	0.1; 0.5; 1.6 and 4.0				
Flow at Δp= 5 bar	[l/min]	250	450	900	1350	1800

Δp/Q performance curves

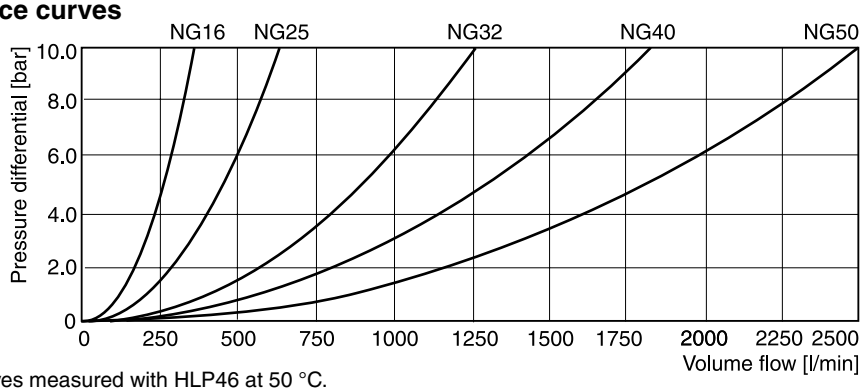

All characteristic curves measured with HLP46 at 50 °C.

Dimensions

NG16-NG32

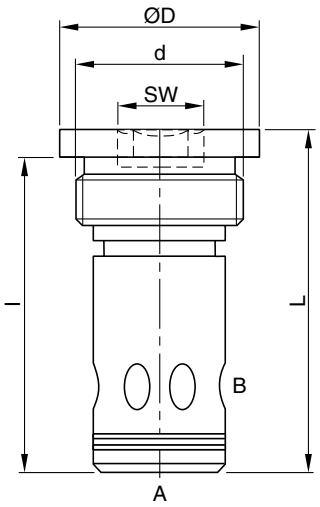

NG40-NG50

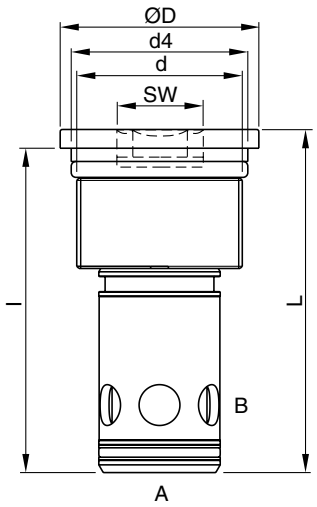

Dimensions	NG16	NG25	NG32	NG40	NG50
D	40	55	72	90	105
L	72.5	89	109.5	155.5	182
d	M33x2	G1½"	G2"	M75x2	M90x2
d4	–	–	–	80	95
l	66	80.5	99.5	147	173.5
SW	17	24	32	32	32
Tightening torque[1)] [Nm] ± 15 %	225	300	550	750	950

Mounting cavity

NG16-NG32

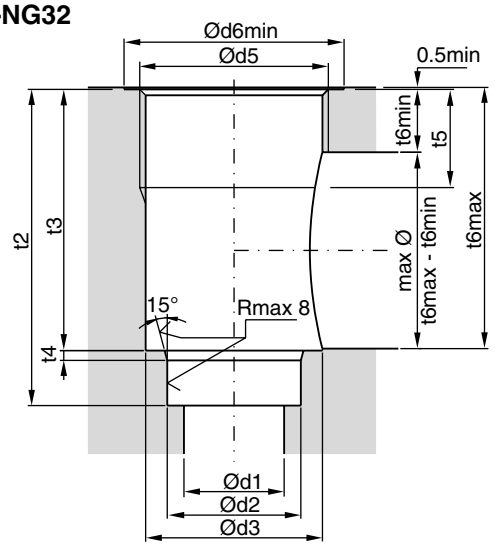

NG40-NG50

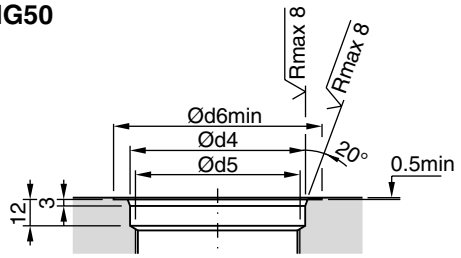

Seal kits

NG	NBR seals	FPM seals
16	SK-SPZBE10E16	SK-SPZBE10E16V
25	SK-SPZBE10E25	SK-SPZBE10E25V
32	SK-SPZBE10E32	SK-SPZBE10E32V
40	SK-SPZBE10E40	SK-SPZBE10E40V
50	SK-SPZBE10E50	SK-SPZBE10E50V

Springs

Spring Type	Ordering Number				
	NG16	NG25	NG32	NG40	NG50
L 0.1 bar	45051368	45051375	45051376	45051382	45051384
N 0.5 bar	45051369	45051374	45051377	45051381	45051385
S 1.6 bar	45051370	45051372	45051378	45051380	45051386
U 4.0 bar	45051371	45051373	45051379	45051383	45051387

Size	NG16	NG25	NG32	NG40	NG50
d1	18	25.5	36	43	56
$d2^{H7}$	25	34	45	55	68
d3	31	45	57	73	88
d4	–	–	–	80 H7	95 H7
d5	M33x2	G1½"	G2"	M75x2	M90x2
$d6_{min}$	41	56	73	95	110
$t2^{+0.1}$	66	80.5	99.5	147	173.5
t3	53	66.5	84.5	129	151.5
t4	2	2.5	2.5	3	3
t5	21	25	30	60	70
$t6_{min}$	16	16	24	55	65
$t6_{max}$	52.5	66	84	128.5	151

[1)] Please note the material specification for tightening torque in chapter 12, "accessories".

The check valve series SPV and SPZ are designed as threaded cartridge valves. All parts are assembled in one unit and easy to mount.



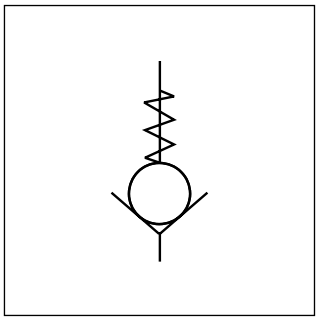

Features

- Little space required
- Leak-free
- Easy assembly

Ports

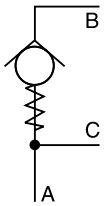

Flow direction V

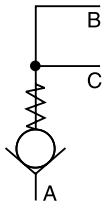

Flow direction Z

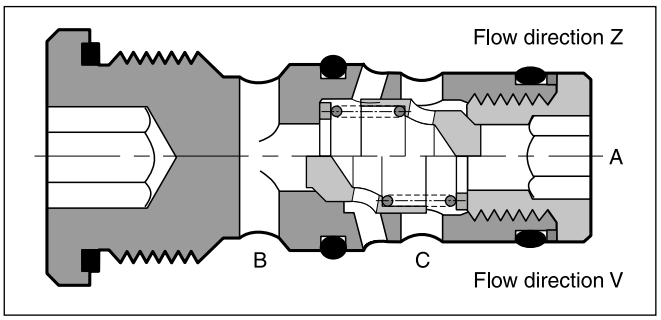

Ordering code

	—	SP		B	030	E		M
Seal		Check valve	Flow direction	Design series	Factory norm, direct operated	Threaded cartridge	Valve size	Spring 0.3 bar

Code	Seal
omit	**NBR**
V	FPM

Code	Size
06	**NG06**
10	**NG10**

Code	Flow direction
V	**Port B → A and C**
Z	**Port A → B and C**

Bold letters =
Short-term availability

Technical data

General				
Design			Threaded cartridge valve	
Nominal size			**NG06**	**NG10**
Mounting position			Unrestricted	
Ambient temperature		[°C]	-20 ... +60	
Weight		[kg]	0.5	0.8
Hydraulic				
Flow direction			See symbols	
Fluid			Hydraulic oil according to DIN 51524	
Fluid temperature		[°C]	-20...+70 (NBR: -25...+70)	
Viscosity,	permitted	[cSt] / [mm²/s]	20 ... 400	
	recommended	[cSt] / [mm²/s]	30 ... 80	
Filtration			ISO 4406 (1999); 18/16/13	
Nominal pressure		[bar]	350	
Opening pressure		[bar]	0.3	
Flow		[l/min]	40	60

Δp/Q performance curve

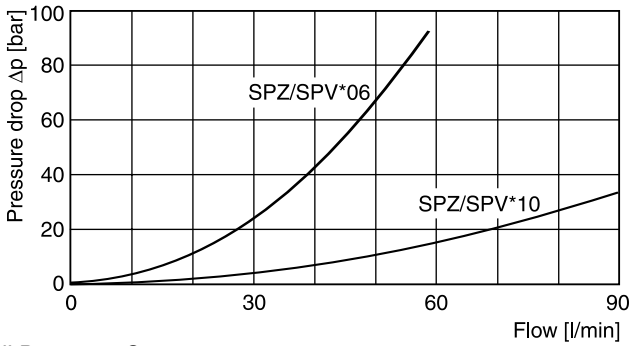

Characteristic curves measured with HLP46 at 50 °C.

Dimensions

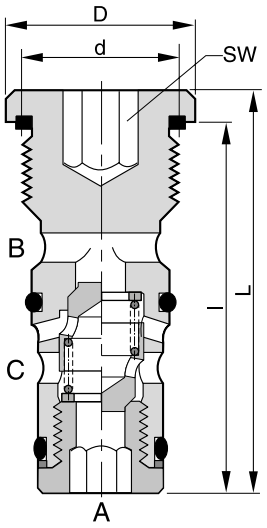

Mounting cavity

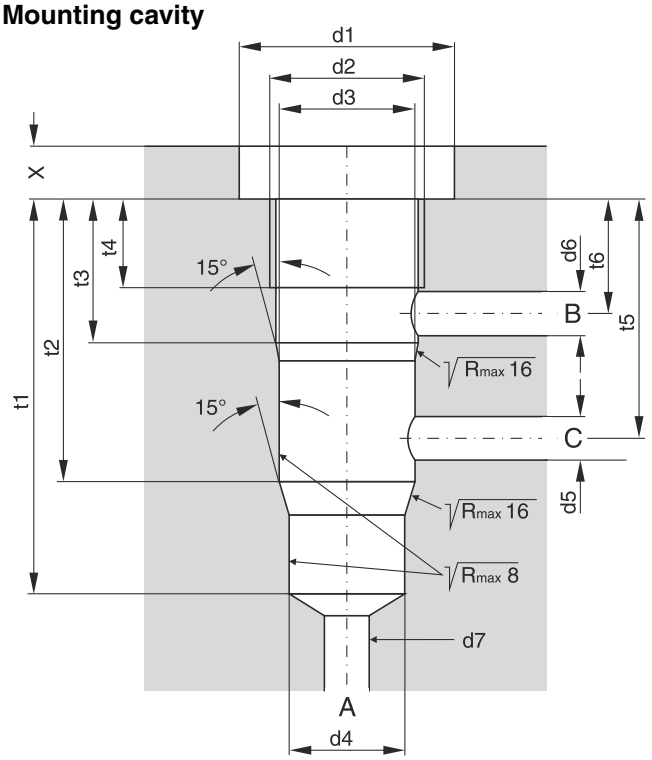

Dimensions	NG06	NG10
D	23	29
L	48	70
d	M18x1.5	M24x1.5
l	42.5	64
SW	8	12
Tightening torque [1] [Nm] ± 15 %	40	65

Dimensions	NG06	NG10
d1	25	35
d2	M18 x 1.5	M24 x 1.5
$d3^{H7}$	16	22
$d4^{H7}$	14	20
$d5_{max.}$	6	9
$d6_{max.}$	6	9
$d7_{max.}$	13.5	19.5
t1	45	68
t2	32	51
t3	16	20
t4	10	15
t5	27.5	40
t6	12	14.5
X	6	7

Seal kits

NG	NBR seals	FPM seals
06	SK-SPV/ZB0E06	SK-SPV/ZB0E06V
10	SK-SPV/ZB0E10	SK-SPV/ZB0E10V

[1] Please note the material specification for tightening torque in chapter 12, "accessories".

Direct operated check valves C4V allow free flow from A to B. The counter direction is blocked. The C4V series is equipped with a leak-free seat type cartridge.

Function

The pressure arising in port A lifts the poppet from the valve seat and releases the flow to B. In the counter direction, the spring and the pressure on top of the cartridge hold the poppet onto the seat and block the flow.



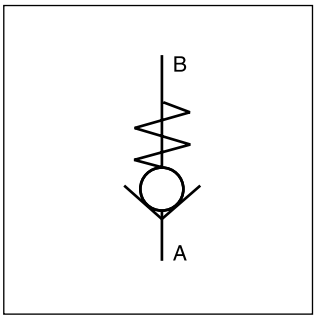

C4V06

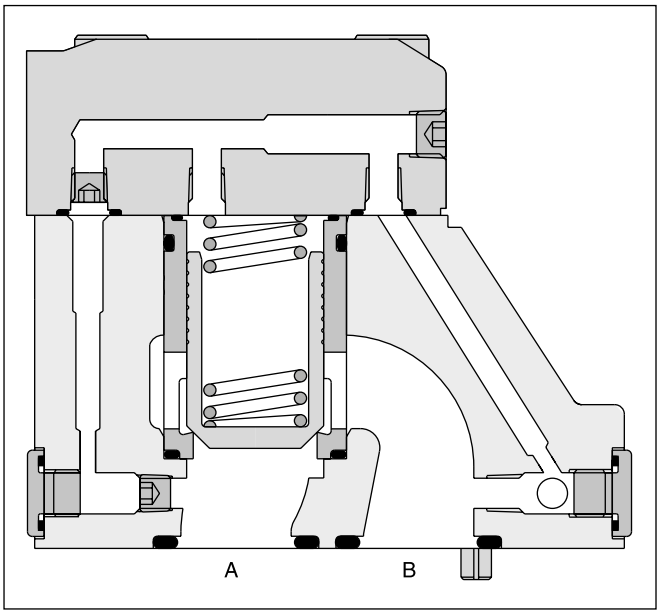

C4V10

Ordering code

C4V	☐	–	5	3	0	☐	B	☐	☐
Check valve direct operated	Nominal size		Max. pressure 350 bar	Subplate mounting		Approx. cracking pressure	Design series	Seal	Options

Code	Nominal size
03	NG10
06	NG25
10	NG32

Code	Seal
1	NBR
5	FPM

Code	Approx. cracking pressure [bar]	
	C4V03	C4V06/10
1	2.8	3.5
2	0.5	0.5
3	0.3	0.3
4	2.2	2.2
5	—	9.0
6	1.2	1.2
7	3.0	—

Technical data

General					
Nominal size			**NG10**	**NG25**	**NG32**
Subplate mounting			ISO 5781		
Mounting position			Unrestricted		
Ambient temperature		[°C]	-20...+60		
$MTTF_D$ value		[years]	150		
Weight		[kg]	2.8	4.6	6.1
Hydraulic					
Max. operating pressure		[bar]	350		
Nominal flow		[l/min]	150	270	450
Fluid			Hydraulic oil according to DIN 51524		
Fluid temperature		[°C]	-20...+70 (NBR: -25...+70)		
Viscosity,	permitted	[cSt] / [mm²/s]	20...400		
	recommended	[cSt] / [mm²/s]	30...80		
Filtration			ISO 4406 (1999); 18/16/13		

Δp/Q performance curve

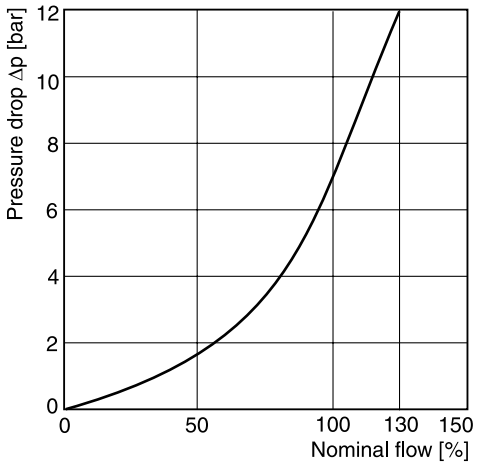

Characteristic curve measured with HLP46 at 50 °C.

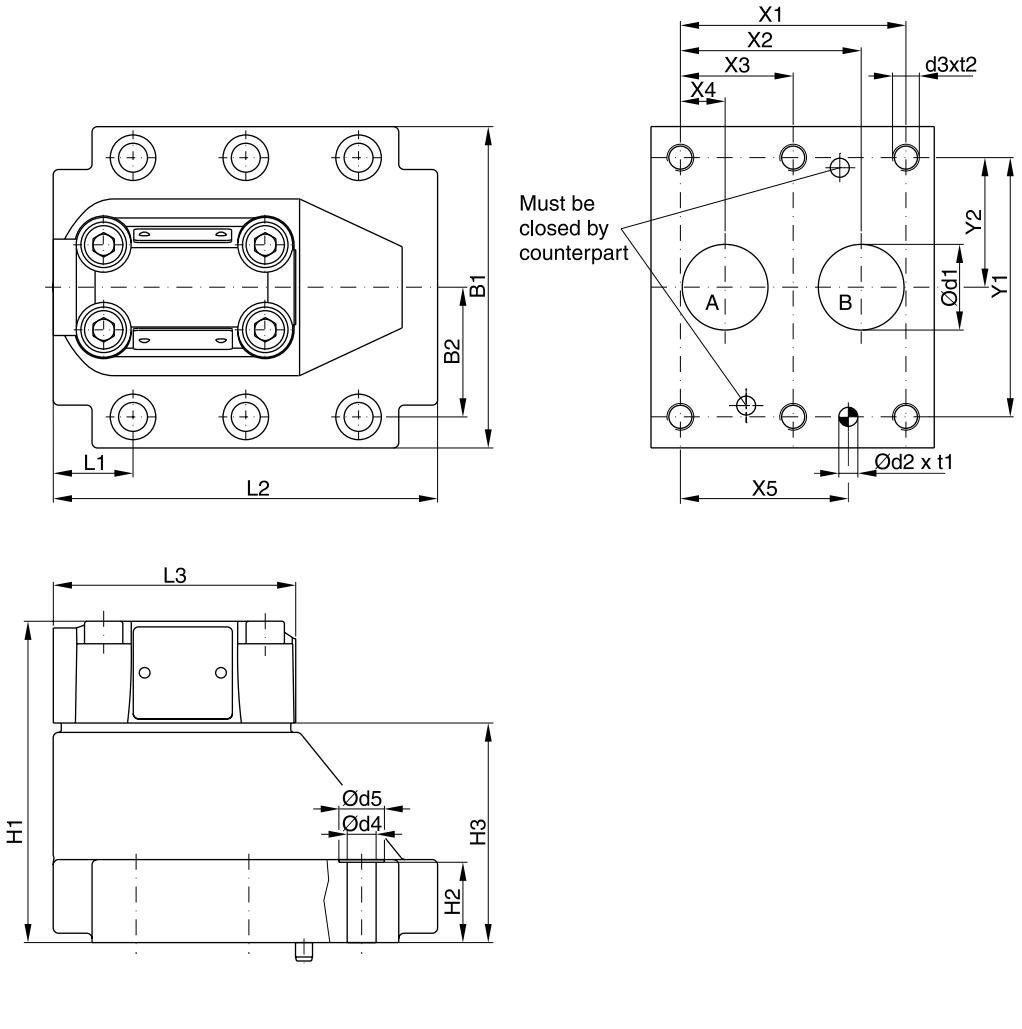

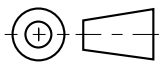

NG	ISO-code	x1	x2	x3	x4	x5	y1	y2	B1	B2	H1	H2	H3	L1	L2
10	5781-06-07-0-00	42.9	35.8	–	7.2	31.8	66.7	33.4	87.3	33.4	83	21	45	29	94.8
25	5781-08-10-0-00	60.3	49.2	–	11.1	44.5	79.4	39.7	105	39.7	107.5	29	69.5	34.7	126.8
32	5781-10-13-0-00	84.2	67.5	42.1	16.7	62.7	96.8	48.4	120	48.4	120	30	82	30.6	144.3

Tolerance for all dimensions ±0.2

NG	ISO-code	d1max	d2	t1	d3	t2	d4	d5
10	5781-06-07-0-00	15	7.1	8	M10	16	10.8	17
25	5781-08-10-0-00	23.4	7.1	8	M10	18	10.8	17
32	5781-10-13-0-00	32	7.1	8	M10	20	10.8	17

NG	ISO-code	Bolt kit	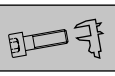	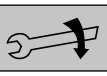	Kit NBR	Kit FPM	Surface finish
10	5781-06-07-0-00	BK505	4x M10x35 ISO 4762-12.9	63 Nm ±15 %	S26-58507-0	S26-58507-5	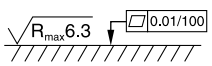
25	5781-08-10-0-00	BK485	4x M10x45 ISO 4762-12.9	63 Nm ±15 %	S26-58475-0	S26-58475-5	
32	5781-10-13-0-00	BK506	6x M10x45 ISO 4762-12.9	63 Nm ±15 %	S26-58508-0	S26-58508-5	

Hydraulically pilot operated check valves C4V allow free flow from A to B. The counter-flow direction is blocked.

When pressure is applied to control port X, the ring chamber flow from B to A is released.

Up to four different pilot control ratios are available (see ordering code).



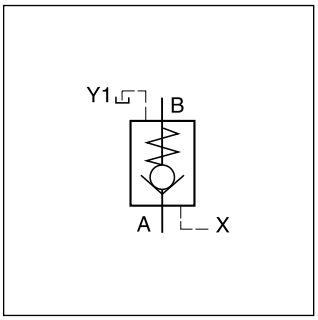

Function

When no pressure is applied to the X-port, the flow from B to A is blocked, because the pressure in B is also in effect on top of the poppet.

Pressurizing the X port relieves the area on top of the poppet to the drain port and allows flow from B to A.

The seat design of the SVL valve series provides leak-free separation of port A and B in the closed position.

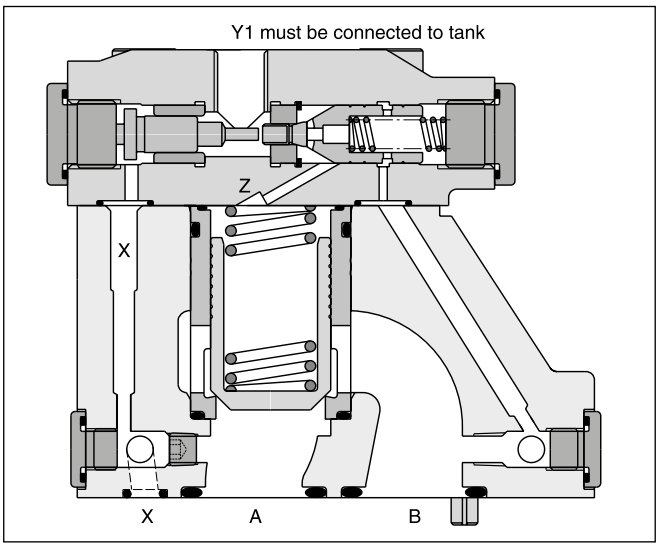

Ordering code

C4V	☐	–	5	9	☐	☐	B	☐	☐
Check valve pilot operated	Nominal size		Max. pressure 350 bar	Y1-port G¼"	Opening ratio	Approx. cracking pressure	Design series	Seal	Options

Code	Nominal size
03	NG10
06	NG25
10	NG32

Code	Opening ratio	Code	Opening ratio
1	1 : 1	E [1]	1 : 1
3	3 : 1	F [1]	3 : 1
8	8 : 1	G [1]	8 : 1
9	10 : 1	H [1]	10 : 1

Code	Optionen
omit	Standard
013	Position control with protection

Code	Seal
1	NBR
5	FPM

Code	Approx. cracking pressure [bar]			
	Flow A to B		Flow B to A	
	C4V03	C4V06/10	C4V03	C4V06/10
2	1.0	1.0	1.5	1.7
4	4.0	3.5	5.5	6.0
6	2.0	2.2	3.0	3.8

[1] Position control incl. amplifier for C4V06/10 only.

Technical data

General					
Nominal size			**NG10**	**NG25**	**NG32**
Subplate mounting			ISO 5781		
Mounting position			Unrestricted		
Ambient temperature		[°C]	-20...+60		
$MTTF_D$ value		[years]	150		
Weight		[kg]	2.8	4.6	6.1
Hydraulic					
Max. operating pressure		[bar]	350		
Nominal flow		[l/min]	150	270	450
Fluid			Hydraulic oil according to DIN 51524		
Fluid temperature		[°C]	-20...+70 (NBR: -25...+70)		
Viscosity,	permitted	[cSt] / [mm²/s]	20...400		
	recommended	[cSt] / [mm²/s]	30...80		
Filtration			ISO 4406 (1999); 18/16/13		

Position control

Position control by proximity switch with amplifier. The closed position is monitored.

Valve open: proximity switch activated.

This proximity switch is pressure proof and has no wearing parts.

Note: Position control for C4V06 and C4V10 only.

Technical data proximity switch

Function		PNP, contact
Supply voltage (Us)	[VDC]	10...30
Supply voltage ripple	[%]	≤ 10
Current consumption	[mA]	max. 8
Residual voltage L-signal	[V]	Us - 2.2 at Imax
Output current (I)	[mA]	≤ 200
Protection class		IP67
Ambient temperature	[C°]	-25...+70
Wire cross section	[mm²]	3 x 0.5

Δp/Q flow curve

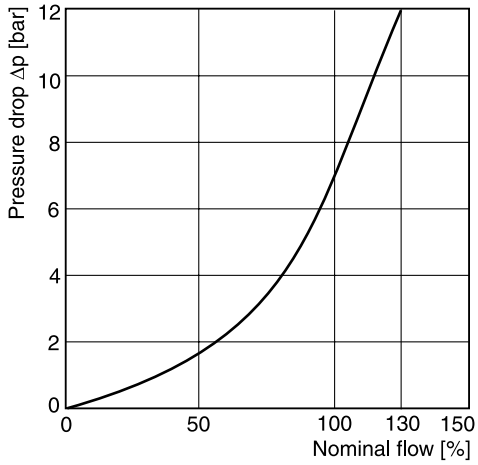

Characteristic curve measured with HLP46 at 50 °C.

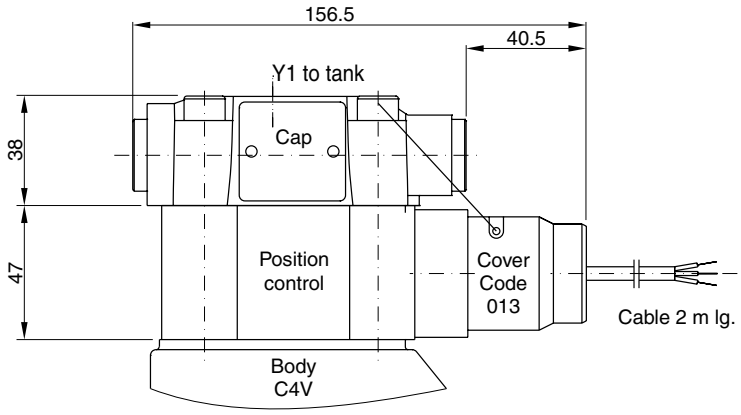

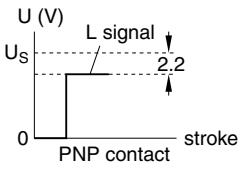

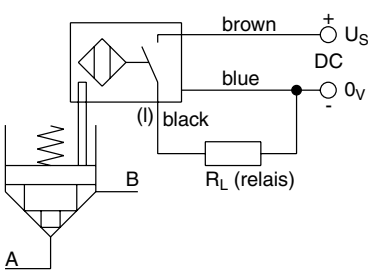

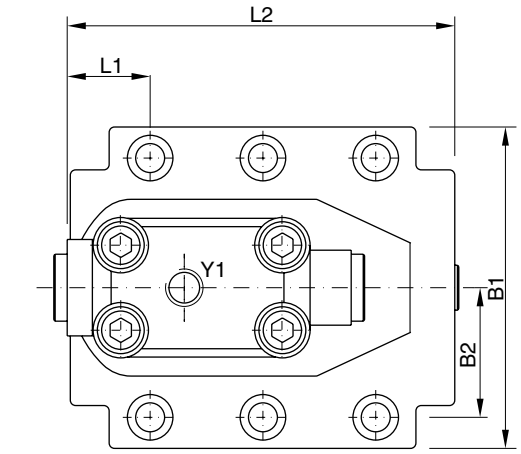

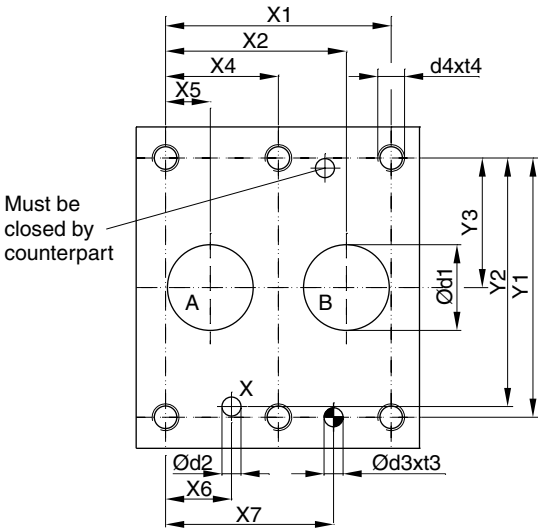

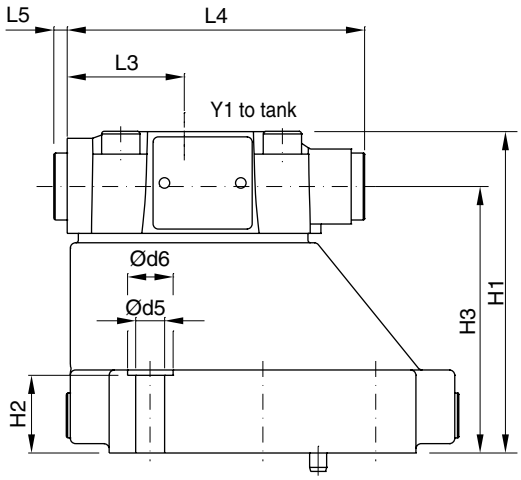

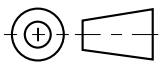

6

NG	ISO-code	x1	x2	x3	x4	x5	x6	x7	y1	y2	y3	y4	y5	y6
10	5781-06-07-0-00	42.9	35.8	–	–	7.2	21.5	31.8	66.7	58.8	33.4	–	–	–
25	5781-08-10-0-00	60.3	49.2	–	–	11.1	20.6	44.5	79.4	73	39.7	–	–	–
32	5781-10-13-0-00	84.2	67.5	–	42.1	16.7	24.6	62.7	96.8	92.8	48.4	–	–	–

Tolerance for all dimensions ±0.2

NG	ISO-code	B1	B2	H1	H2	H3	H4	H5	H6	L1	L2	L3	L4	L5	L6
10	5781-06-07-0-00	87.3	33.4	83	21	62.5	–	–	–	29.4	95.2	43.7	111	5	–
25	5781-08-0-0-00	105	39.7	107.5	29	87	–	–	–	35.1	127.2	43.7	111	5	–
32	5781-10-13-0-00	120	48.4	120	30	99.5	–	–	–	31	144.7	43.7	111	5	–

NG	ISO-code	d1max	d2max	d3	t3	d4	t4	d5	d6
10	5781-06-07-0-00	15	7	7.1	8	M10	16	10.8	17
25	5781-08-10-0-00	23.4	7.1	7.1	8	M10	18	10.8	17
32	5781-10-13-0-00	32	7.1	7.1	8	M10	20	10.8	17

NG	ISO-code	Bolt kit	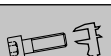		Kit		Surface finish
					NBR	FPM	
10	5781-06-07-0-00	BK505	4x M10x35 ISO 4762-12.9	63 Nm ±15 %	S26-58507-0	S26-58507-5	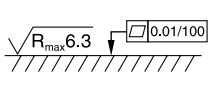
25	5781-08-10-0-00	BK485	4x M10x45 ISO 4762-12.9	63 Nm ±15 %	S26-58475-0	S26-58475-5	
32	5781-10-13-0-00	BK506	6x M10x45 ISO 4762-12.9	63 Nm ±15 %	S26-58508-0	S26-58508-5	

Seat valves series D4S are designed for directional control functions. A large variety of poppets, springs and covers – including shuttle valves, stroke limiters, solenoid valves (VV01) and position control – allow to design individual hydraulic solutions for nominal flow up to 600 l/min.

A complete program of 2/2-way seat valves is offered under Parker brand:

subplate mounted valves	series D4S	chapter 6
SAE flange valves	series D5S	chapter 9
slip-in cartridges	series CAR	on request

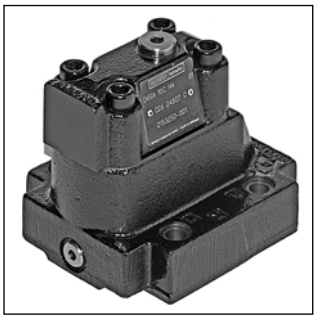

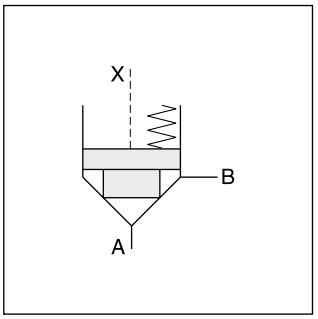

Features

- Subplate mounting according to ISO 5781
- Leak-free seat valve design
- Numerous pilot options
- 6 poppet types
- D4S03 - NG10
  D4S06 - NG25
  D4S10 - NG32

D4S10-9DC

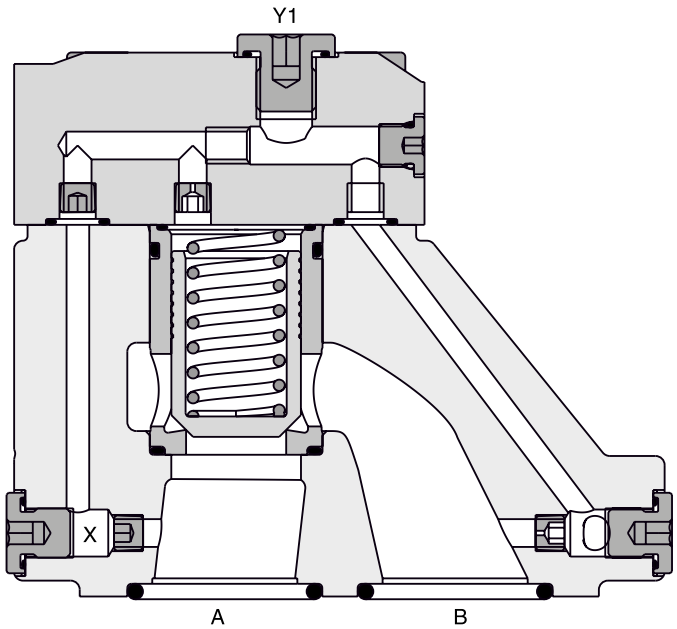

Pilot oil Y = internal from B

D4S		–	9									B		
Seat valve	Nominal size		Subplate mounting ISO 5781, Y1 port G¼"	Pilot connection	Cap version	Sleeve	Spool type	Spring	Switching type	Solenoid voltage		Design series	Seals	Options

Code	Nominal size
03	NG10
06	NG25
10	NG32

Code	Pilot oil line in body		
		A-X	B-Y
1	internal from A	⊖	○
2	external from X	●	○
A [1]	internal from A	⊖	●
B	external from X	●	●
C	internal from A + B	⊖	⊖
D	internal from B	●	⊖
G	external from Y	●	●

Code	Ports	X	Y	Z	X-Y	Y1	VV01
	Standard						
1	Pilot oil = pilot drain	○	●	⊖	○	●	—
C	Pilot oil = pilot drain	●	○	⊖	○	●	—
	With solenoid valve (VV01)						
2	Ext. PD from cap	○	○	⊖	●	○	●
5	Ext. to subplate	○	○	⊖	●	●	○
6	Internal pilot drain	○	○	⊖	●	●	○
	With stroke limiter (not for D4S03)						
3	Pilot oil = pilot drain	⊖	●	—	—	—	—
4	Pilot oil = pilot drain	●	⊖	—	—	—	—

○ open bore ● closed bore ⊖ orifice Ø 1.2

Code	Sleeve
1	AA = 95 %, AB = 5 %
3	AA = 60 %, AB = 40 %

Code	Size	Poppet type	Sleeve
1	03, 06,10	With closed bottom and 15° chamfer (pZ max. = pA +20 bar)	1
2	03	With 0.8 dia. orifice at the bottom and 15° chamfer	1
	06, 10	With 1.2 dia. orifice at the bottom and 15° chamfer	1
4	03, 06,10	With closed bottom and 45° chamfer	1, 3
A [2]	06, 10	Safety spool (for position control only)	3
B [2]	06, 10	Throttle spool, 10° chamfer	3
C [2]	06, 10	Throttle spool, 3° chamfer	3

Code	Spring (approx. cracking pressure [bar])					
	Sleeve Code 1		Sleeve Code 3			
	A → B		A → B		B → A	
	D4S03	D4S06/10	D4S03	D4S06/10	D4S03	D4S06/10
1	2.8	3.5	6.5	6.5	9.5	11.0
2	0.5	0.5	1.0	1.0	1.5	1.7
3	0.3	0.3	0.6	0.6	0.9	1.0
4	2.2	2.2	4.0	3.5	5.5	6.0
5	—	9.0	—	16.0	—	28.0
6	1.2	1.2	2.0	2.2	3.0	3.8
7	3.0	—	8.0	—	12.0	—

Code	Options
omit	Standard
013	Cover for end position control

Code	Seals
1	NBR
5	FPM

Code	Solenoid voltage
omit	Standard w/o vent function
G0R	12 V=
G0Q	24 V=
GAR [4]	98 V=
GAG [4]	205 V=
W30	110 V / 50 Hz 120 V / 60 Hz
W31	230 V / 50 Hz 240 V / 60 Hz

Code	Switching type	
omit	Standard w/o vent function	
09	VV01 with manual override	de-energized: power comp. open
10	VV01 without manual override	
11	VV01 with manual override	de-energized: power comp. closed
12	VV01 without manual override	
CA	Shuttle valve	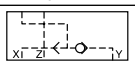
DA	Shuttle valve	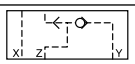
CB	VV01 code 09 and shuttle valve code CA	
CD	VV01 code 11 and shuttle valve code CA	
DB	VV01 code 09 and shuttle valve code DA	
DD	VV01 code 11 and shuttle valve code DA	
BH	VV01 code 10 and shuttle valve code CA and position control [3] with amplifier	
BK	VV01 code 12 and shuttle valve code CA and position control [3] with amplifier	
BN	VV01 code 10 and shuttle valve code DA and position control [3] with amplifier	
BQ	VV01 code 12 and shuttle valve code DA and position control [3] with amplifier	
BC	VV01 code 10 and position control [3] with amplifier	
BE	VV01 code 12 and position control [3] with amplifier	
BA	Position control [3] with amplifier	
BF	Position control [3] with amplifier and shuttle valve code CA	
BL	Position control [3] with amplifier and shuttle valve code DA	

[1] With VV01 only.

[2] Springs 2, 3 and 6 only.

[3] Position control for D4S06/10 only. Spring 2 or 4. Spool A and sleeve 3. Valve open: proximity switch damped.

[4] To be used in combination with rectifier plugs at 120 VAC/230 VAC power supply.

Examples see end of chapter

General							
Size			**NG10**		**NG25**		**NG32**
Mounting interface			Subplate mounting according to ISO 5781				
Mounting position			unrestricted				
Ambient temperature		[°C]	-20...+60				
$MTTF_D$ value		[years]	150				
Weight		[kg]	2.7		4.5		6.0
Hydraulic							
Operating pressure		[bar]	Ports A, B up to 350; Port Y 140 (with VV01)				
Nominal flow		[l/min]	180		360		600
Fluid			Hydraulic oil according to DIN 51524				
Fluid temperature		[°C]	-20...+70 (NBR: -25...+70)				
Viscosity,	permitted	[cSt] / [mm^2/s]	20...400				
	recommended	[cSt] / [mm^2/s]	30...80				
Filtration			ISO 4406 (1999); 18/16/13				
Electrical (solenoid)							
Duty ratio			100 % ED; CAUTION: coil temperature up to 150 °C possible				
Protection class			IP65 in accordance with EN 60529 (with correctly mounted plug-in connector)				
Code			G0R	G0Q	GAR	GAG	W30	W31
Supply voltage		[V]	12 V =	24 V =	98 V =	205 V =	110 at 50 Hz 120 at 60 Hz	230 at 50 Hz 240 at 60 Hz
Tolerance supply voltage		[%]	±10	±10	±10	±10	±5	±5
Current consumption	hold	[A]	2.72	1.29	0.33	0.13	0.6 / 0.55	0.3 / 0.27
	in rush	[A]	2.72	1.29	0.33	0.13	2.5 / 2.4	1.25 / 1.2
Power consumption	hold	[W]	32.7	31	31.9	28.2	70 / 70 VA	70 / 70 VA
	in rush	[W]	32.7	31	31.9	28.2	280 / 290 VA	280 / 290 VA
Solenoid connection			Connector as per EN175301-803, solenoid identification as per ISO 9461					
Wiring min.		[mm^2]	3 x 1.5 recommended					
Wiring length max.		[m]	50 recommended					

D4S pilot configuration

D4S direct operated	**D4S with vent valve VV01**	**VV01**
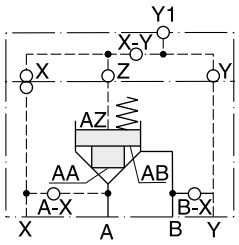	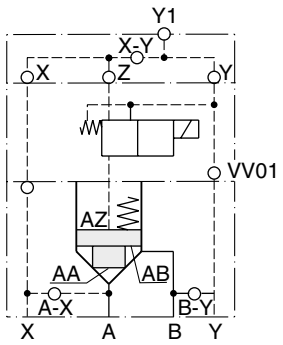	de-energized open 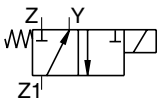 de-energized closed 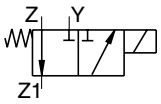

Δp/Q performance curves

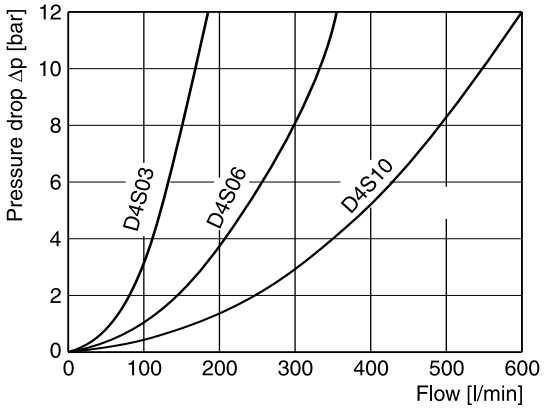

Leakage

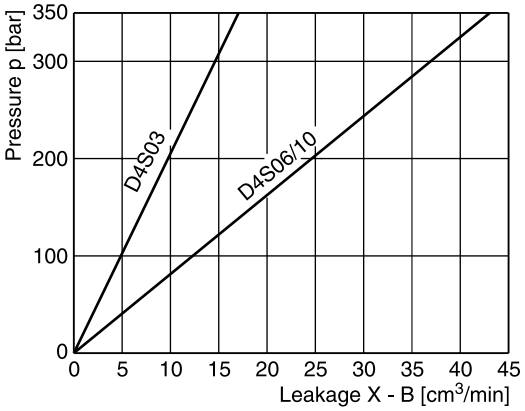

All characteristic curves measured with HLP46 at 50 °C.

6

Selection of Cartridges

Sleeve 1, poppet 1	Sleeve 1, poppet 2	Sleeve 1, poppet 4	Sleeve 3, poppet 4	Sleeve 3, poppet A	Sleeve 3, poppet B/C
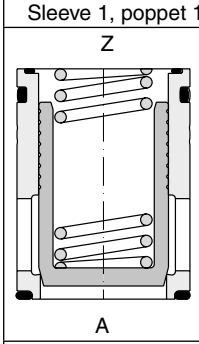	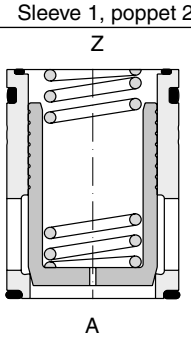	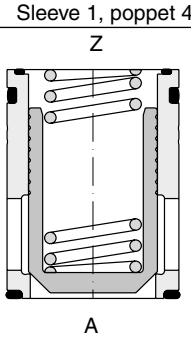	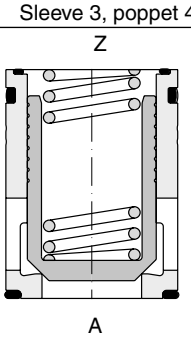	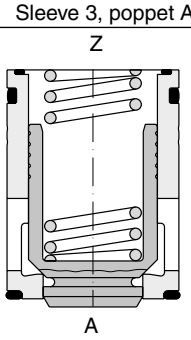	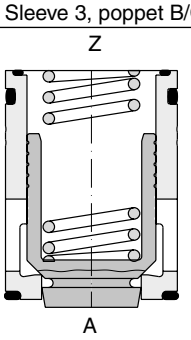
1 : 1.05	1 : 1.05	1 : 1.05	1 : 1.67	1 : 1.67	1 : 1.67
$A_A = 0.95\ A_C$	$A_A = 0.95\ A_C$	$A_A = 0.95\ A_C$	$A_A = 0.6\ A_C$	$A_A = 0.6\ A_C$	$A_A = 0.6\ A_C$
$A_B = 0.05\ A_C$	$A_B = 0.05\ A_C$	$A_B = 0.05\ A_C$	$A_B = 0.4\ A_C$	$A_B = 0.4\ A_C$	$A_B = 0.4\ A_C$
15° chamfer	15° chamfer	45° chamfer	45° chamfer	45° chamfer	45° chamfer
	orifice			safety spool	throttle spool

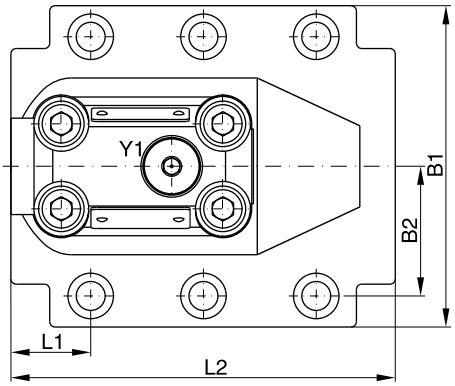

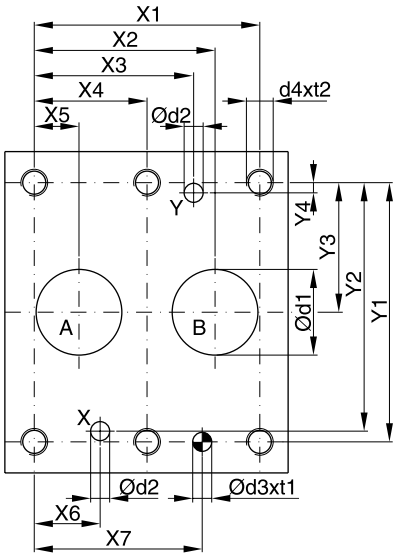

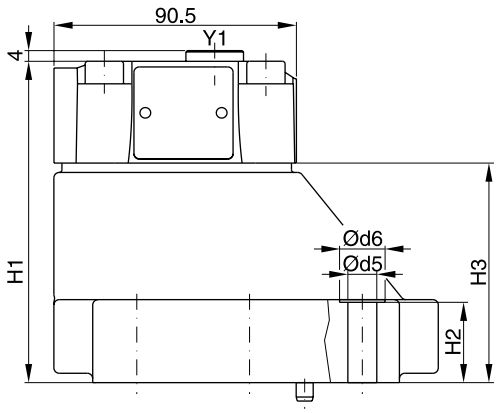

6

NG	ISO-code	X1	X2	X3	X4	X5	X6	X7	Y1	Y2	Y3	Y4
10	5781-06-07-0-00	42.9	35.8	21.5	–	7.2	21.5	31.8	66.7	58.8	33.4	7.9
25	5781-08-10-0-00	60.3	49.2	39.7	–	11.1	20.6	44.5	79.4	73	39.7	6.4
32	5781-10-13-0-00	84.2	67.5	59.5	42.1	16.7	24.6	62.7	96.8	92.8	48.4	3.8

NG	ISO-code	B1	B2	H1	H2	H3	L1	L2	D1	D2	D3	t1	D4	t2	D5	D6
10	5781-06-07-0-00	87.3	33.35	83	21	45	29	94.8	15	7	7.1	8	M10	16	10.8	17
25	5781-08-10-0-00	105	39.7	107.5	29	69.5	34.7	126.8	23.4	7.1	7.1	8	M10	18	10.8	17
32	5781-10-13-0-00	120	48.4	120	30	82	30.6	144.3	32	7.1	7.1	8	M10	20	10.8	17

NG	Kit	ISO 4762-12.9		Kit		Surface finish
				NBR	FPM	
10	BK505	4x M10x35	63 Nm ±15 %	S26-58507-0	S26-58507-5	R_{max}6.3 ⏥ 0.01/100
25	BK485	4x M10x45	63 Nm ±15 %	S26-58475-0	S26-58475-5	
32	BK506	6x M10x45	63 Nm ±15 %	S26-58508-0	S26-58508-5	

Dimensions D4S with VV01

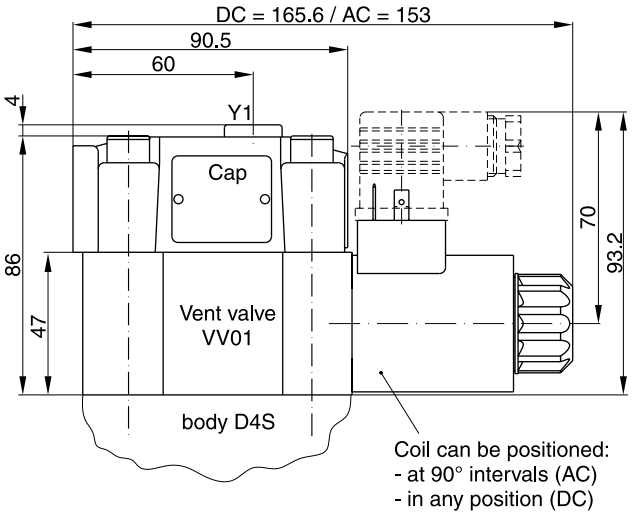

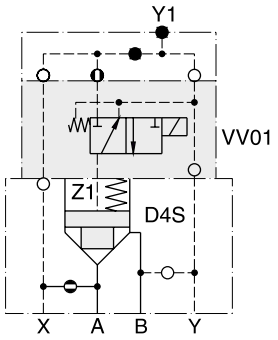

with manual override | without manual override

D4S..-.....09/10
Solenoid energized:
D4S blocked
Solenoid de-energized:
Flow from A-B or B-A

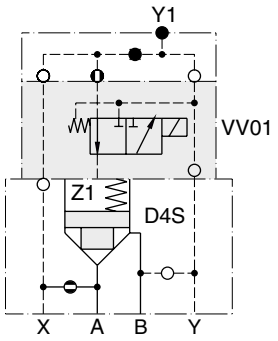

with manual override | without manual override

D4S..-.....11/12
Solenoid energized:
Flow from A-B or B-A
Solenoid de-energized:
D4S blocked

6

Dimensions D4S with shuttle valve

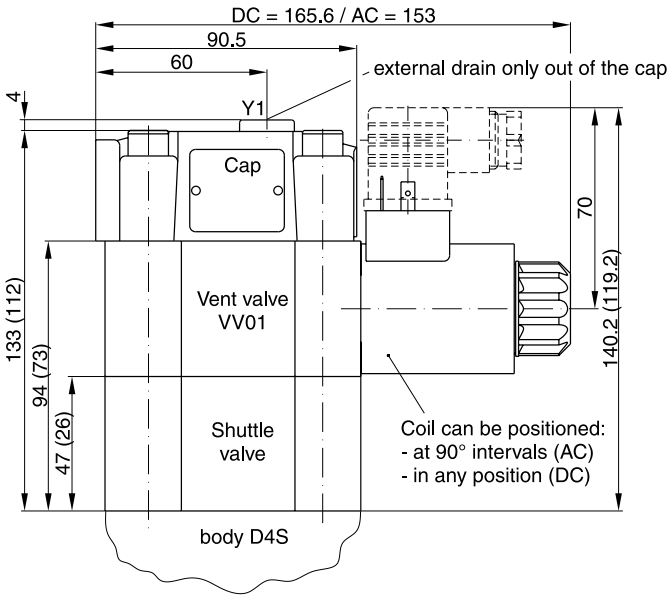

() Dimensions in brackets are for version VV01with shuttle valve code DB or DD.

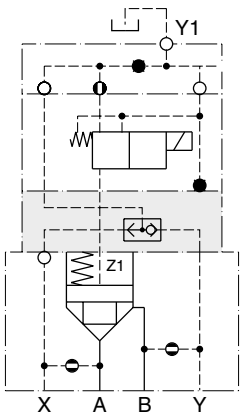

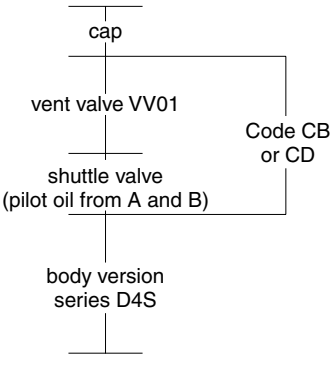

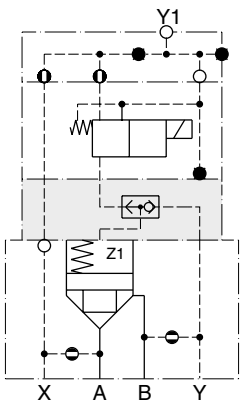

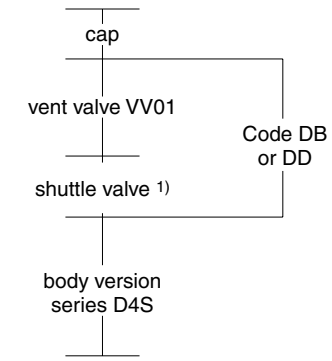

1) Pilot oil from A and B, from B to A check valve function.

Dimensions D4S position control

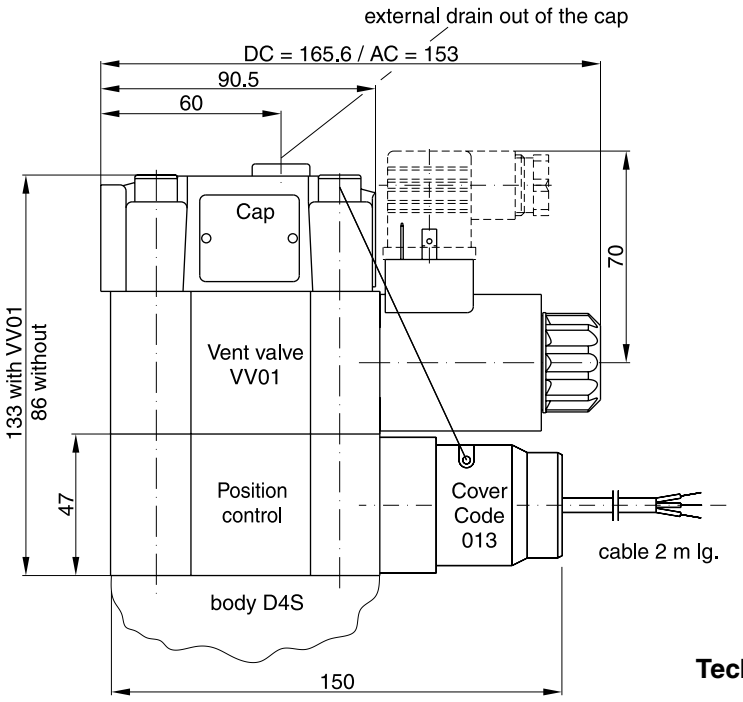

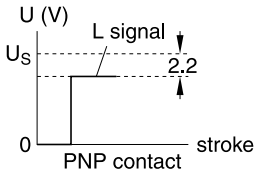

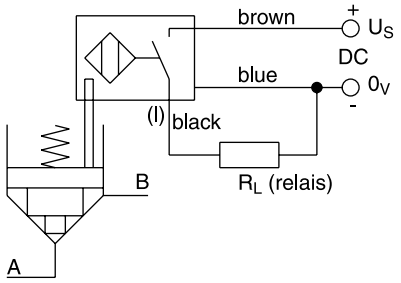

Position control by proximity switch (incl. amplifier)

Valve open: proximity switch activated.

This proximity switch is pressure proof and has no wearing parts.

Note

Position control for D4S06 and D4S10 only.

Technical data (proximity switch)

Function		PNP, contact
Supply voltage (Us)	[VDC]	10...30
Supply voltage ripple	[%]	≤ 10
Current consumption	[mA]	max. 8
Residual voltage L-signal	[V]	Us - 2.2 at I_{max}
Output current (I)	[mA]	≤ 200
Protection class		IP67
Ambient temperature	[C°]	-25...+70
Wire cross section	[mm²]	3 x 0.5

Dimensions D4S stroke limiter

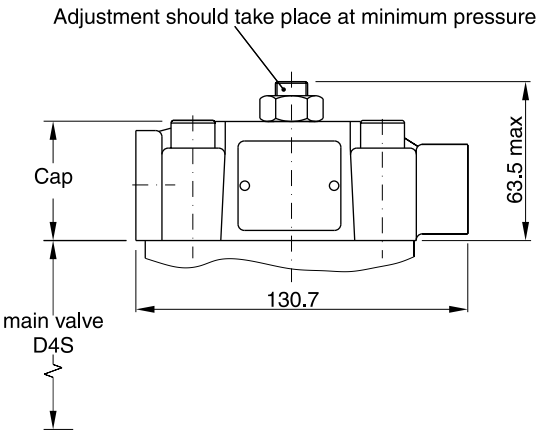

Example: $D4S^{06}_{10}$-.233B.

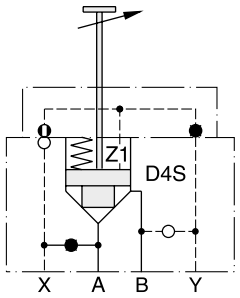

Note:

Stroke limiter not for use with D4S03, vent valve VV01, shuttle valve and positon control.

D4S direct operated

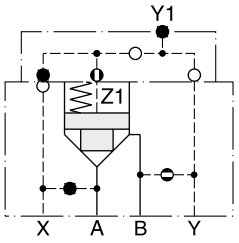

D4S..-.DC
Pilot oil Y = internal from B

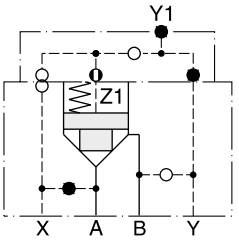

D4S..-.21
Pilot oil X = external

D4S with VV01

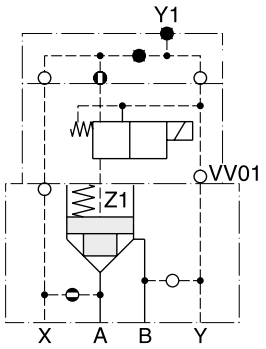

D4S..-.16... 09 10 11 12 } with VV01
Pilot oil X = internal from A
Drain Y = internal to B

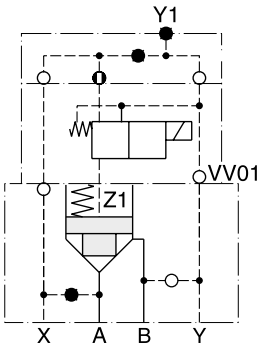

D4S..-.26... 09 10 11 12 } with VV01
Pilot oil X = external
Drain Y = internal to B

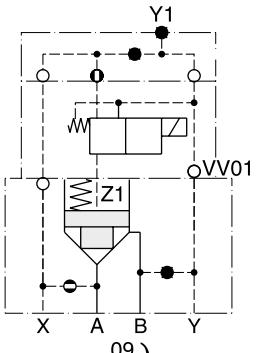

D4S..-.A5... 09 10 11 12 } with VV01
Pilot oil X = internal from A
Drain Y = external to subplate

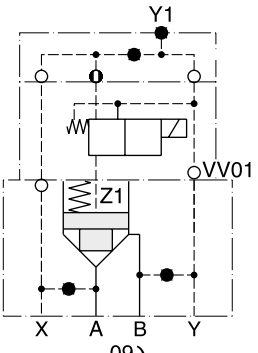

D4S..-.B5... 09 10 11 12 } with VV01
Pilot oil X = external
Drain Y = external to subplate

D4S with VV01

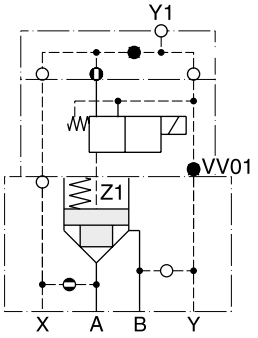

D4S..-.12... 09 / 10 / 11 / 12 } with VV01

Pilot oil X = internal from A
Drain Y1 = external out of the cap

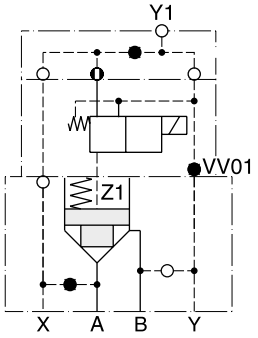

D4S..-.22... 09 / 10 / 11 / 12 } with VV01

Pilot oil X = external
Drain Y1 = external out of the cap

D4S with shuttle valve

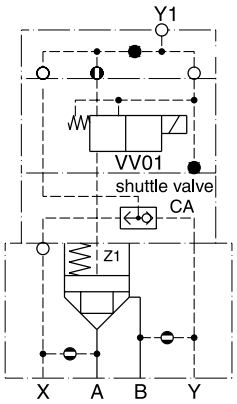

D4S..-.C2... CB / CD } with shuttle valve CA and VV01

Pilot oil = internal from A and B
Drain Y1 = external out of the cap

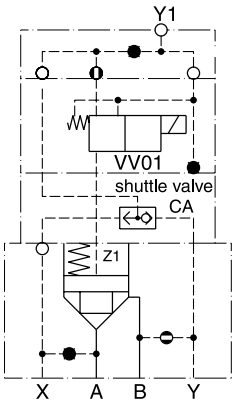

D4S..-.D2... CB / CD } with shuttle valve CA and VV01

Pilot oil = internal from B and external from X
Drain Y1 = external out of the cap

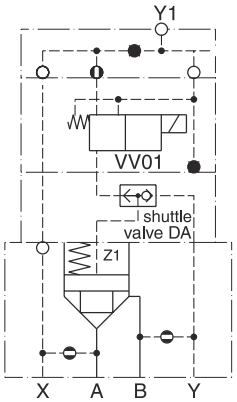

D4S..-.C2-...- DB / DD } with shuttle valve DA and VV01

Pilot oil = internal from A and B
(B-A = check valve function)
Drain Y1 = external out of the cap

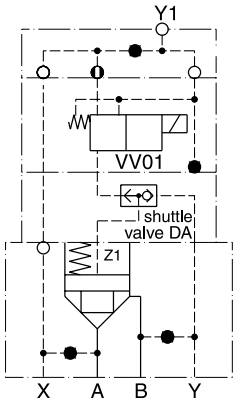

D4S..-.B2... DB / DD } with shuttle valve DA and VV01

Pilot oil = external from X and Y
Drain Y1 = external out of the cap

D4S with position control

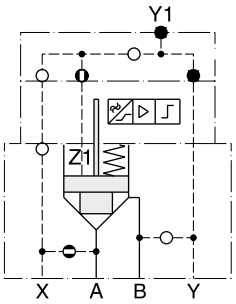

D4S..-.113A.BA
(with position control)

Pilot oil X = internal from A

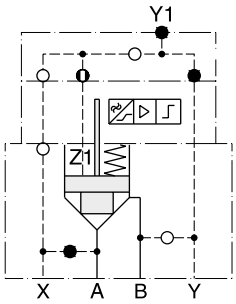

D4S..-.213A.BA
(with position control)

Pilot oil X = external

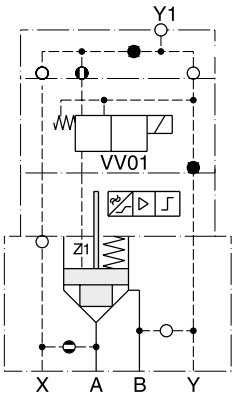

D4S..-.123A. BC / BE } with position control and VV01

Pilot oil X = internal from A
Drain Y1 = external out of the cap

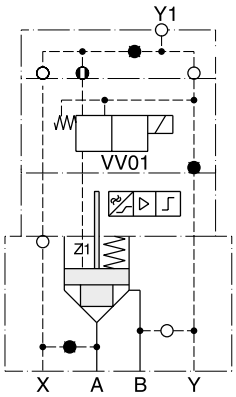

D4S..-.223A. BC / BE } with position control and VV01

Pilot oil X = external
Drain Y1 = external out of the cap

D4S with stroke limiter

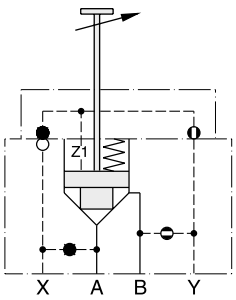

D4S..-.D434. with stroke limiter
Pilot oil Y = internal from B

Note: for D4S06 and D4S10 only

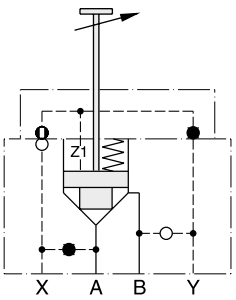

D4S..-.233B. with stroke limiter
Pilot oil X = external

Note: for D4S06 and D4S10 only

Description	Threaded cable joint	Body colour coding	Order no.
Plug EN 175301-803, design type AF, protection class IP 65 Voltages up to 250 V	PG 9	black, B	**5001710**
		grey, A	**5001711**
	PG11	black, B	**5001716**
		grey, A	**5001717**

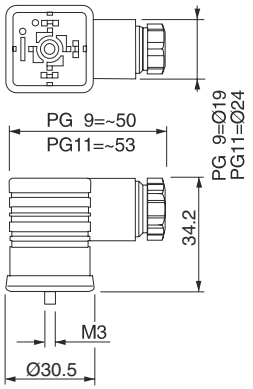

6

For other plugs see chapter 2, "Accessories"

Series	Description	Size				Page
	DIN / ISO	06	10	16	25	
	DC valve					
Z1DW	Shut-off valve					7-2
	Pressure relief valves, manual operation					
RDM	Direct operated	•	•			7-9
RM	Pilot operated			•	•	7-13
ZDV	Pilot operated, high performance	•	•			7-18
	Pressure reducing valves, manual operation					
PRDM	Direct operated, 3-way	•	•			7-22
PRM	Pilot operated, 2-way			•	•	7-27
ZDR	Pilot operated, 2-way, high performance	•	•			7-31
	Pressure reducing valves, proportional operation					
PRPM	Pilot operated, 3-way	•	•			7-35
	Pressure compensators					
LCM	2-way pressure compensator	•	•			7-39
	Throttle check valves					
FM		•	•	•	•	7-40
ZRD	High performance	•	•			7-48
	Check valves					
CM		•	•			7-52
ZRV		•	•			7-58
	Check valves, pilot operated					
CPOM		•	•	•	•	7-61
ZRE	High performance	•	•			7-66
	Counterbalance valves					
ZNS	Pilot operated	•	•			7-69
	Information					
	Mounting patterns, general information					7-72

Further sandwich valves are presented in chapter 8 „slip-in cartridge valves“, see „accessories, pilot valves“

Direct operated, spool-type sandwich DC valves series Z1DW size NG06 are used for shutting off the flow in stack systems.

For shut off secondary ports A and B, body version A is applied. P and T are drilled through.

For applications with port B drained in a switching position to tank, body version B is used. P and A are drilled through.

Valves are sealed to the manifold side.

The valves can be ordered with inductive position control optionally.

Attention:
The adjustment of the position control is factory set and sealed. Replacement and repairs can only be undertaken by the manufacturer.



Z1DW*E standard



Z1DW*E ind. position control

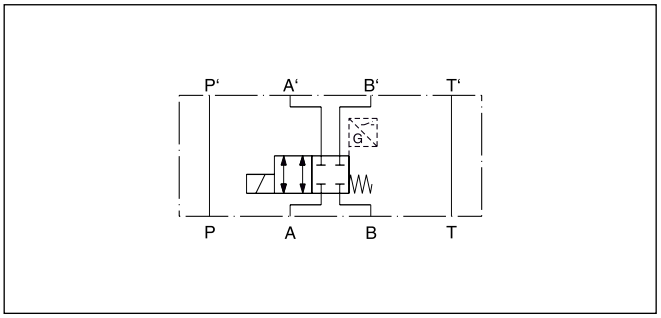

Z1DWA02E

Technical Features
- Shut-off sandwich valve NG06
- Inductive position control optional

7

Z1DW*E without inductive position control

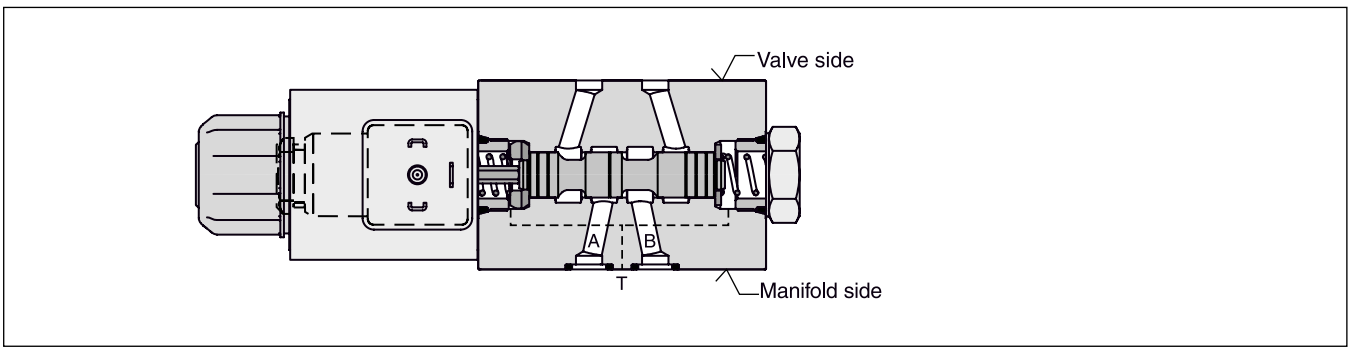

Z1DW*E with inductive position control

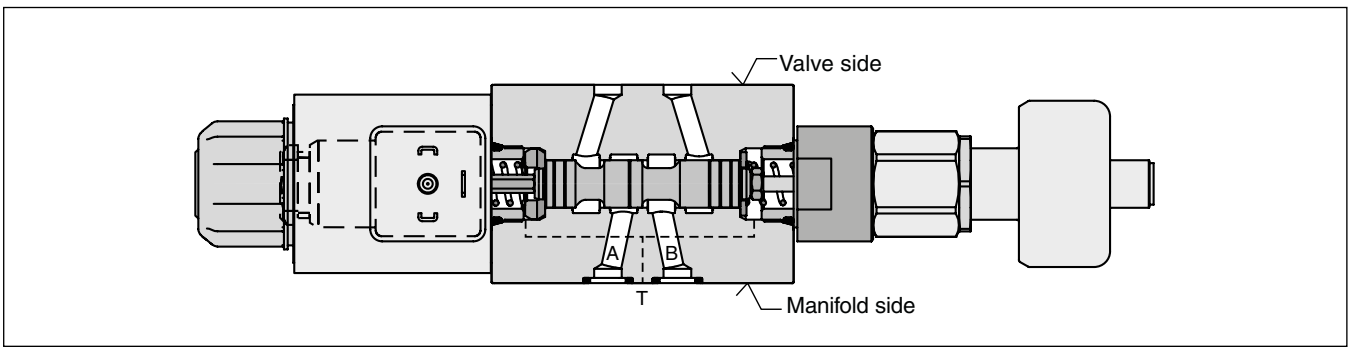

Z	1	D	W						W			
Sandwich plate, Shut-off valve	**Size DIN NG06 CETOP 03 NFPA D03**		**Wet pin solenoid**	**Body**	**Spool type**	**Spool position**	**Seals**	**Solenoid voltage**	**Connector as per EN 175301-803, without plug** (please order plug separately)	**Manual override option**	**Position control**	**Design series** (not required for ordering)

Code	Code	Code	
A	01	C [1]	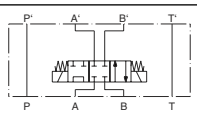
A	01	E	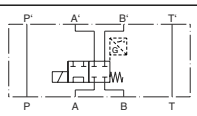
A	01	K	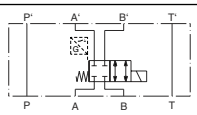
A	02	C [1]	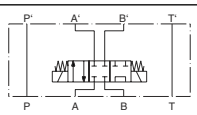
A	02	E	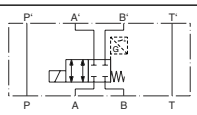
A	02	K	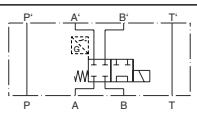
A	03	K	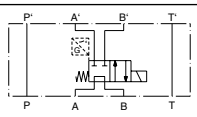
A	04	E	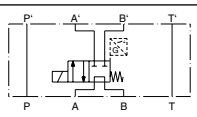
B	37	B	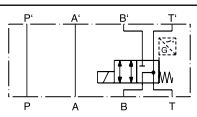

Code	Position control	Spool position
omit	Standard	C, E, B, K
I2N [4]	End position monitored side B	E, B (Solenoid on a-side)
I5N [3][4]	Start position monitored side B	
I1N [4]	End position monitored side A	K (Solenoid on b-side)
I4N [3][4]	Start position monitored side A	

Code	Manual override
omit	Standard valve with manual override
T [3]	without manual override

Code	Voltage
K	12 V =
J	24 V =
U [2]	98 V =
G [2]	205 V =

Code	Seals
N	NBR
V	FPM

Further spool types and voltages on request.

[1] Without position control.
[2] To be used in combination with rectifier plugs at 120 VAC / 230 VAC power supply.
[3] For hydraulic presses according to the safety regulations EN 693, manual override code “T” (without manual override) and position control “I4N” or “I5N” (start position monitored) are required.
[4] Please order female connector M12x1 separately (see accessories in chapter 2, female connector M12x1 (order no.: 5004109).

General					
Design		Directional spool valve, sandwich type			
Actuation		Solenoid			
Size		DIN NG06 / CETOP 03 / NFPA D03			
Mounting interface		DIN 24340 A6 / ISO 4401 / CETOP RP 121-H / NFPA D03			
Mounting position		unrestricted, preferably horizontal			
Ambient temperature	[°C]	-20...+60			
$MTTF_D$ value	[years]	150			
Weight	[kg] [kg]	1.8 (1 solenoid), 2.3 (2 solenoids) w/o position control 2 with position control			
Hydraulic					
Max. operating pressure	[bar]	P, A B: 350 ; T: 210			
Fluid		Hydraulic oil in accordance with DIN 51524			
Fluid temperature	[°C]	-20…+70 (NBR: -25…+70)			
Viscosity, permitted	[cSt] / [mm²/s]	20...400			
recommended	[cSt] / [mm²/s]	30...80			
Filtration		ISO 4406 (1999); 18/16/13			
Flow max.	[l/min]	50			
Leakage at 50 bar	[ml/min]	Up to 10 per flow path, depending on spool			
Static / Dynamic					
Step response at 95 %	[ms]	Energized: 32 ; De-energized: 40			
Electrical characteristics					
Duty ratio		100 % ED; CAUTION: coil temperature up to 150 °C possible			
Max. switching frequency	[1/h]	15000			
Protection class		IP 65 in accordance with EN 60529 (with correctly mounted plug-in connector)			
	Code	K	J	U	G
Supply voltage	[V]	12 V =	24 V =	98 V =	205 V =
Tolerance supply voltage	[%]	±10	±10	±10	±10
Current consumption	[A]	2.72	1.29	0.33	0.13
Power consumption	[W]	32.7	31	31.9	28.2
Solenoid connection		Connector as per EN 175301-803, solenoid identification as per ISO 9461.			
Wiring min.	[mm²]	3 x 1.5 recommended			
Wiring length max.	[m]	50 recommended			

With electrical connections the protective conductor (PE ⏚) must be connected according to the relevant regulations.

Electrical characteristics of position control as per IEC 61076-2-101 (M12x1)

Supply voltage	[VDC]	24
Tolernace supply voltage	[%]	±20
Ripple supply voltage	[%]	≤10
Polarity protection	[V]	300
Current consumption without load	[mA]	≤20
Switching hysteresis	[mm]	<0.06
Max. output current per channel, ohmic	[mA]	250
Ambient temperature	[°C]	-20 … +60
Protection		IP65 acc. EN 60529 (with correctly mounted plug-in connector)
Min. distance to next AC solenoid	[m]	0.1
Interface		M12x1 to IEC 61076-2-101
CE conform		EN 61000-4-2 / EN 61000-4-4 / EN 61000-4-6 [1] / ENV 50140 / ENV 50204

M12 pin assignment

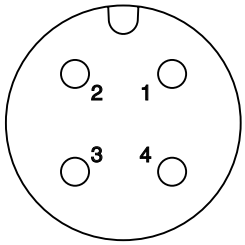

1 + U_S 19.2...28.8 V
2 Out B: normally open
3 0V
4 Out A: normally closed

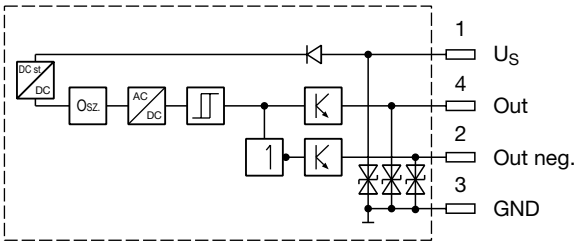

Outputs: Open collector

7

Definitions

Start position monitored:

The valve is de-energized. The inductive switch gives a signal at the moment when the spool leaves the spring offset position (below 25 % spool stroke).
At the switching point the spool is located within the closed position. It is secured that only the flow paths of the offset position are granted.

End position monitored:

The inductive switch gives a signal before the end position is reached (above 75 % spool stroke).

The switch can only be located on the opposite side of the solenoid for direct operated valves.
Please order plug M12 x 1 separately (see accessories, plug M12x1; order no.: 5004109).

[1] Only guaranted with screened cable and female connector

The flow curve diagram shows the flow versus pressure drop curves for all spool types. The relevant curve number for each spool type, operating position and flow direction is given in the table below.

Spool	Symbol	A-A'	A'-A	B-B'	B'-B	T-T'	T-T' Start position	T-T' End position	P-P'	B-T	A-B	B-A
A01C A01K	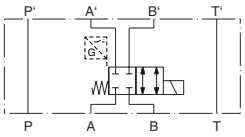	5	5	5	5	1	—	—	1	—	5	5
A02C A02E	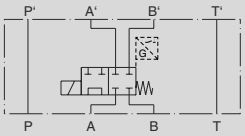	5	5	5	5	1	—	—	1	—	5	5
A03K	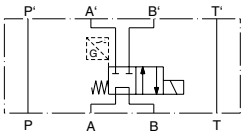	4	4	6	6	1	—	—	1	—	6	6
A04E	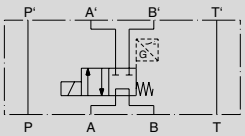	6	6	4	4	1	—	—	1	—	6	6
B37B	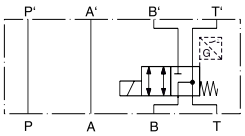	2	2	4	4	—	3	1	1	6	—	—

7

Flow curves

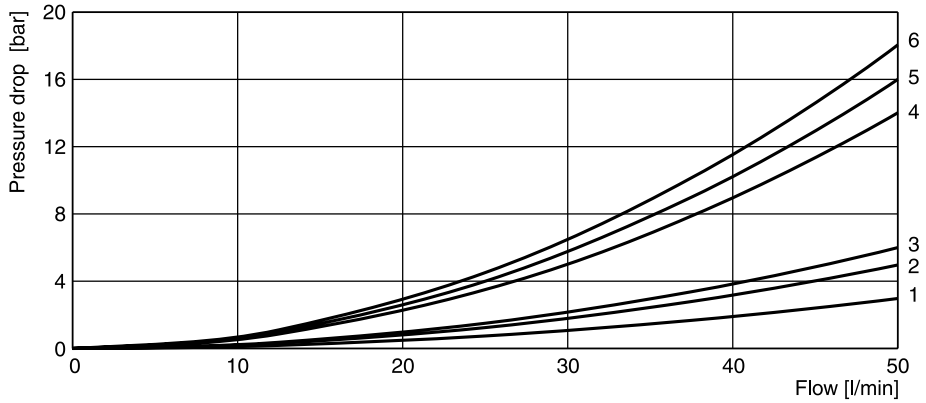

Shift limits

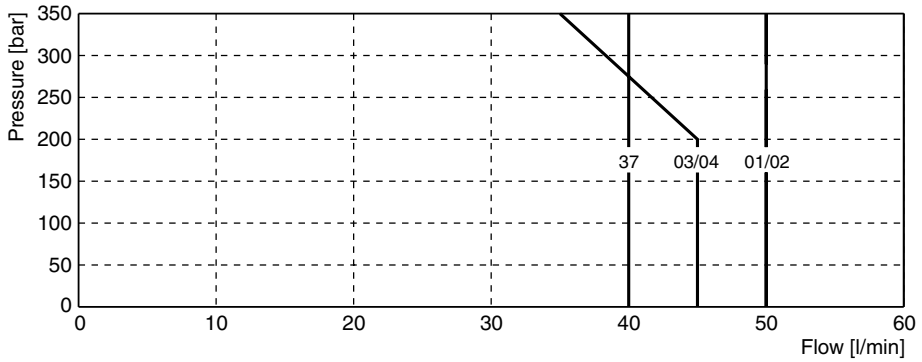

Measured with HLP46 at 50 °C, 90 % U_{nom} and warm solenoids.

Z1DW Standard
B, E -style

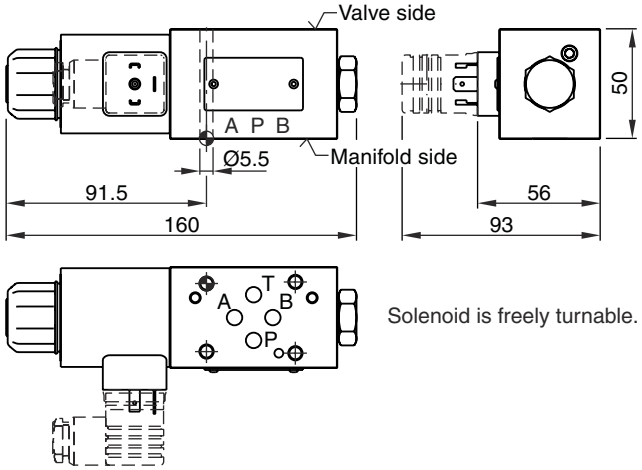

K -style

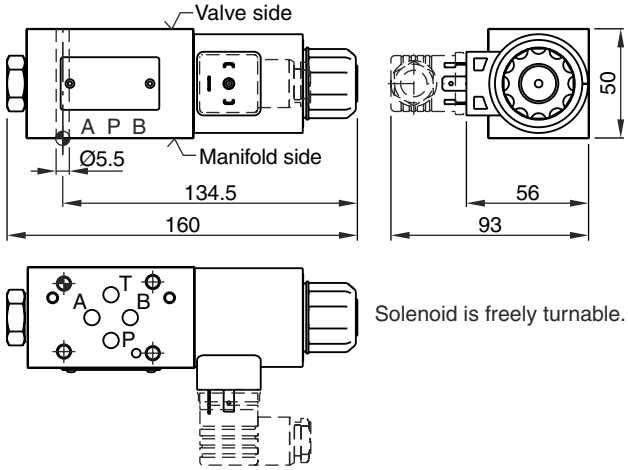

C -style

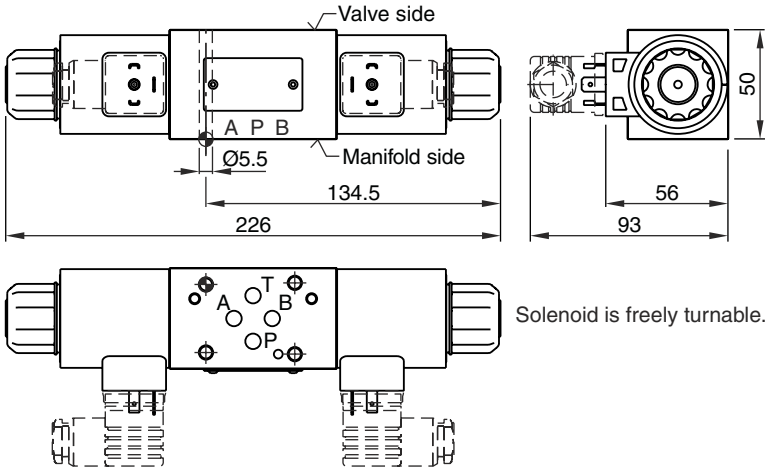

7

Surface finish		Kit
R_{max}6.3 ⏥ 0.01/100	7.6 Nm ±15 %	**NBR: SK-D1VW-N91** FPM: SK-D1VW-V91

The space necessary to remove the plug per EN 175301-803, design type AF is at least 15 mm.
The torque for the screw M3 of the plug has to be 0.5 to 0.6 Nm.

Z1DW with inductive position control
Interface EN 175301-803, DC solenoid, without plug M12x1 [1)]

B, E -style

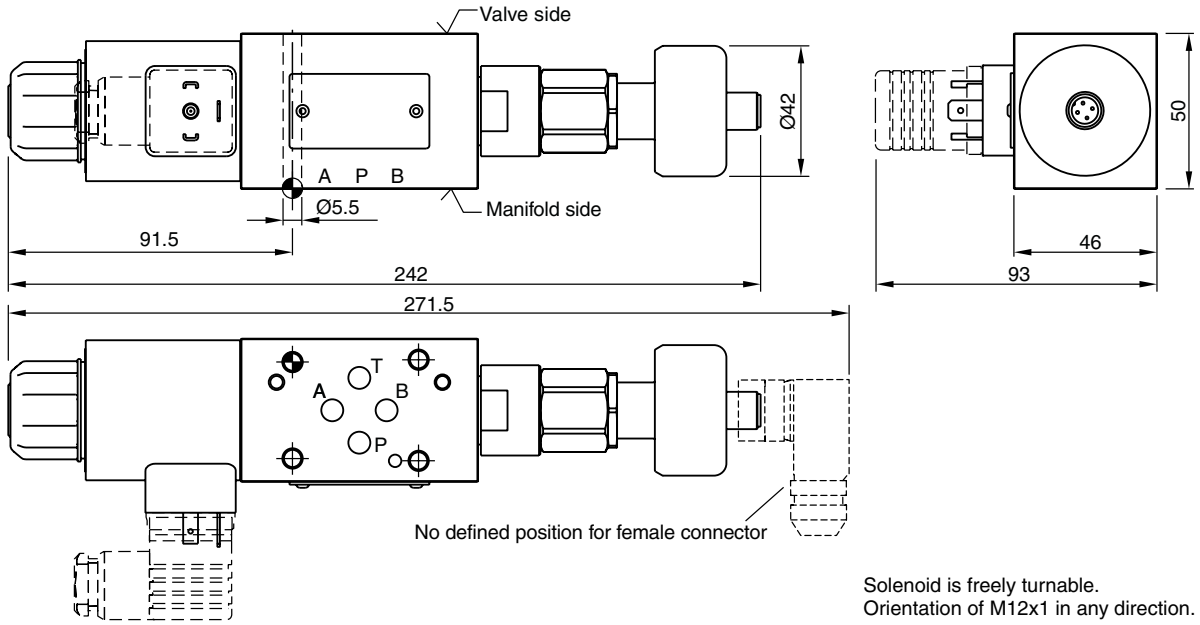

Solenoid is freely turnable.
Orientation of M12x1 in any direction.

K -style

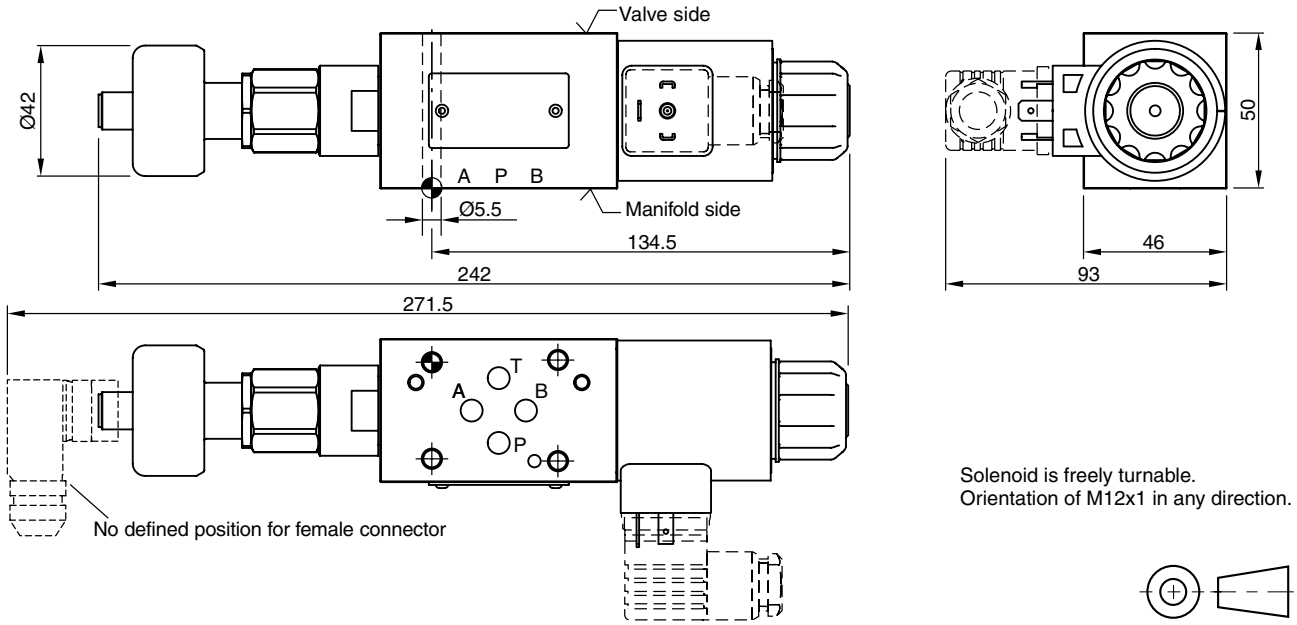

Solenoid is freely turnable.
Orientation of M12x1 in any direction.

Surface finish		Kit
R_{max}6.3 ⏥ 0.01/100	7.6 Nm ±15 %	**NBR: SK-D1VW-N91** FPM: SK-D1VW-V91

The space necessary to remove the plug per EN 175301-803, design type AF is at least 15 mm.

The torque for the screw M3 of the plug has to be 0.5 to 0.6 Nm.

Attention: The adjustment of the position control is factory set and sealed. Replacement and repairs can only be undertaken by the manufacturer.

[1)] Please order plug M12 x 1 separately (see accessories, plug M12x1; order no.: 5004109).

The direct operated pressure relief valves series RDM are in sandwich design for easy configuration of stock systems.
They relief the pressure of the hydraulic system to the adjusted value.



RDM2

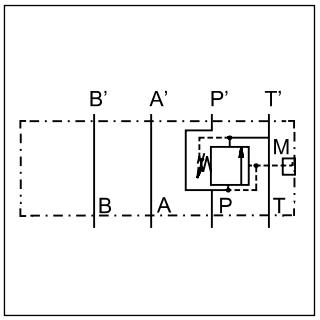

Example PT

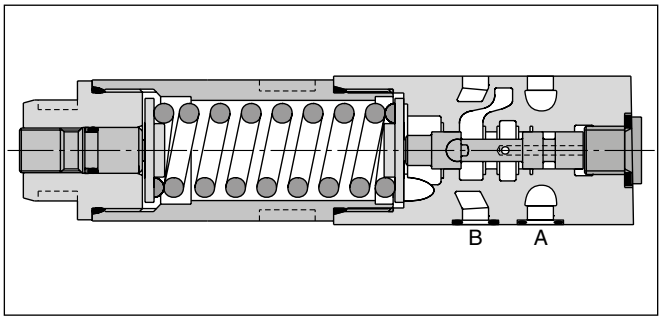

RDM2

Function

PT... pressure is relieved from P to T.
TT... pressure pre-loading in T.

Features

- The direct operated, cushioned piston design results in fast response, low leakage and minimal hysteresis.
- Pressure settings:
  bar 25, 64, 160, 210, 350 for RDM2,
  bar 19, 50, 100, 150, 210 for RDM3.
- Adjustment modes:
  - Hexagon socket
  - Cylinder lock
  - Turning knob
- Gauge port
- RDM2 - NG06 (CETOP 03)
  RDM3 - NG10 (CETOP 05)

Ordering code

RD	M					V		
Pressure relief valve, direct operated	Manapak	Size	Pressure relief	Pressure range	Adjustment	Seal FPM	Gauge port	Design series (not required for ordering)

Code	Size
2	**NG06**
3	**NG10**

Code	Pressure relief
PT	**P**
TT [1]	T

Code	Gauge port
G [2]	**G¼**
C	Coupling M16

Code	Adjustment
S	**Hexagon socket**
L	Cylinder lock
K	Turning knob [3]

Pressure range	
Code	RDM2
02	1.5 to 25 bar
06	**1.5 to 64 bar**
16	**3 to 160 bar**
21	**3 to 210 bar**
35	5 to 350 bar
Code	RDM3
01	1.5 to 19 bar
05	1.5 to 50 bar
10	3 to 100 bar
15	3 to 150 bar
21	3 to 210 bar

Bold letters =
Short-term availability

[1] NG06 only, max. 160 bar.
[2] Standard in housing.
[3] NG06 only.

Technical data

General				
Series			**RDM2**	**RDM3**
Size			**NG06**	**NG10**
Mounting interface			ISO 4401	
Weight		[kg]	1.3	2.6
$MTTF_D$ value		[years]	150	
Ambient temperature		[°C]	-20...+60	
Hydraulic				
Max. operating pressure	P, A, B	[bar]	350	315
	T	[bar]	50	10
Fluid			Hydraulic oil according to DIN 51524	
Fluid temperature		[°C]	-20...+70	
Viscosity,	permitted	[cSt] / [mm²/s]	20 ... 400	
	recommended	[cSt] / [mm²/s]	30 ... 80	
Filtration			ISO 4406 (1999); 18/16/13	
Max. flow		[l/min]	40	80

Performance curves

RDM2 02

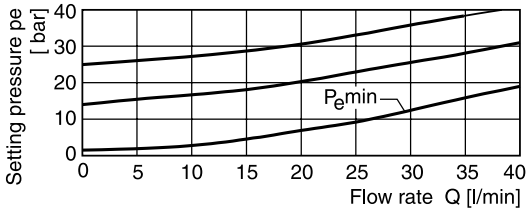

RDM2 06

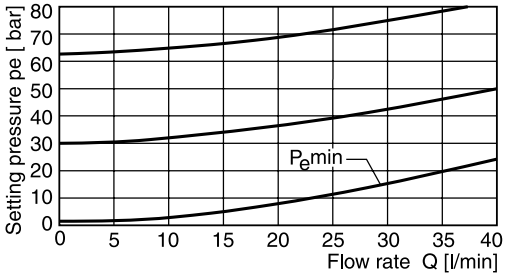

RDM2 16

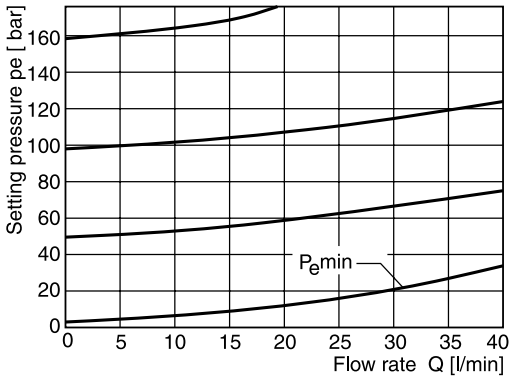

RDM2 21

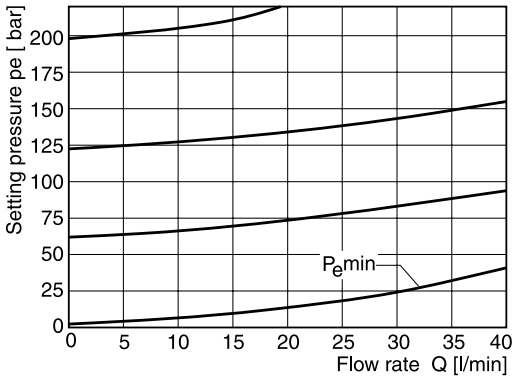

RDM2 35

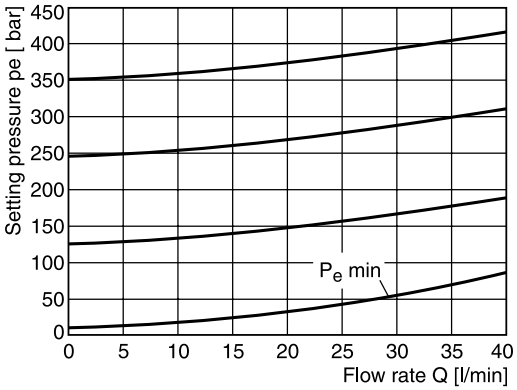

All characteristic curves measured with HLP46 at 50 °C.

RDM3 01

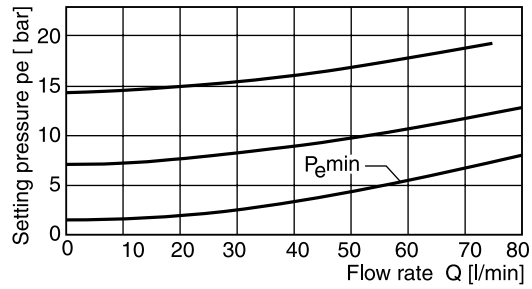

RDM3 05

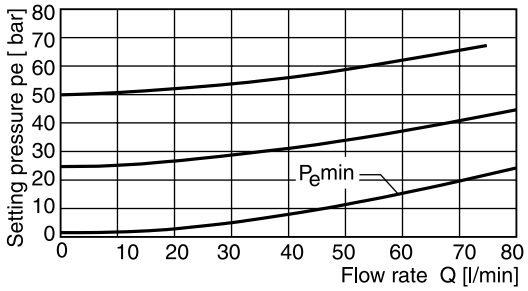

RDM3 10

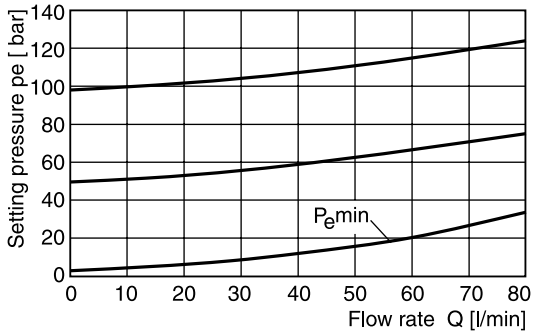

RDM3 21

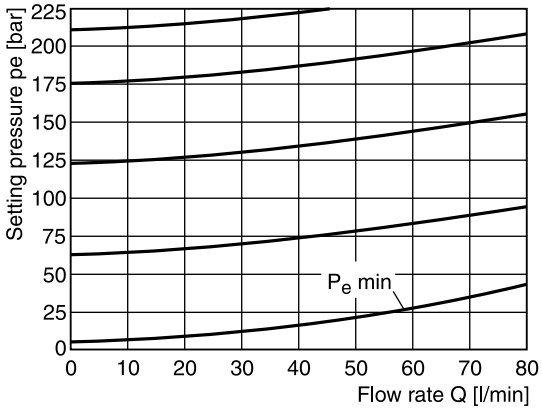

RDM3 15

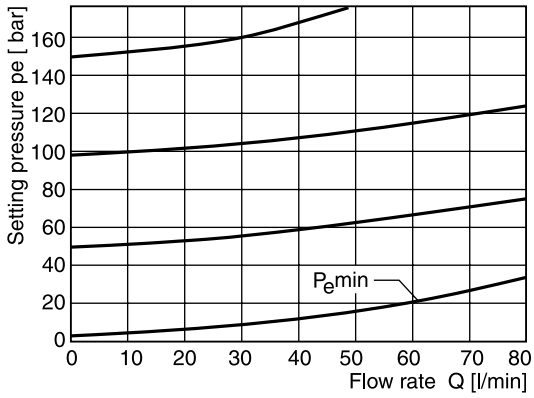

All characteristic curves measured with HLP46 at 50 °C.

Schematics

RDM*PT

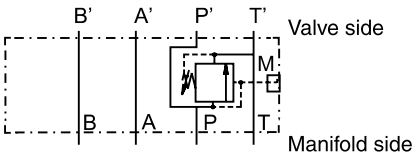

RDM*TT

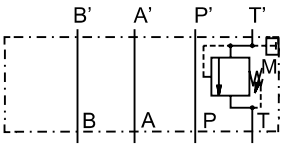

Gauge port option C

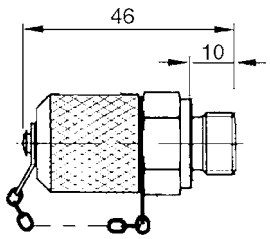

7

RDM2

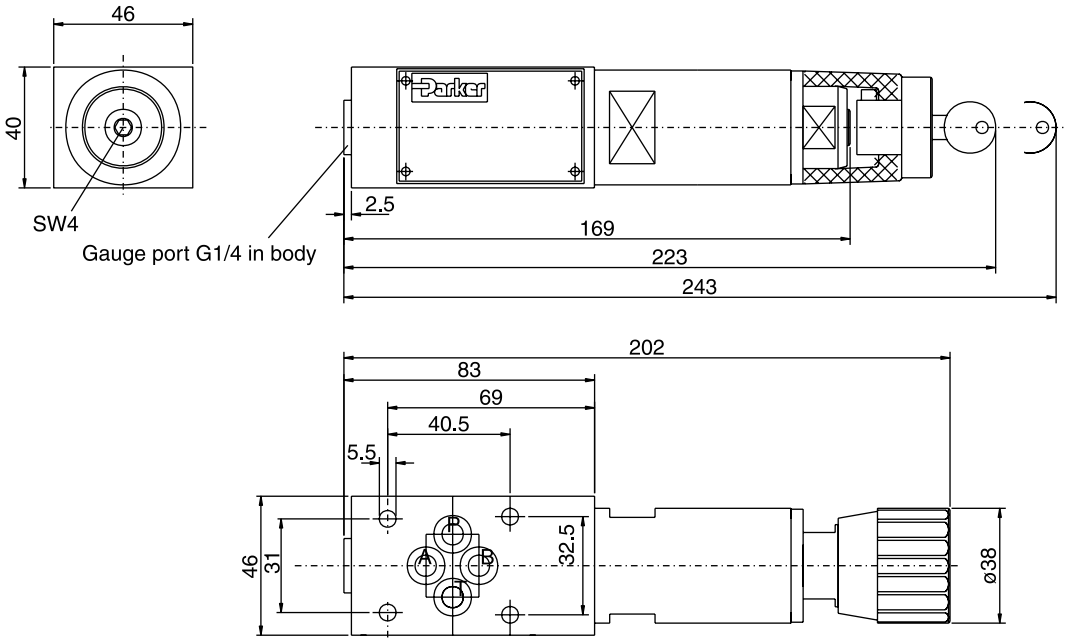

7

RDM3

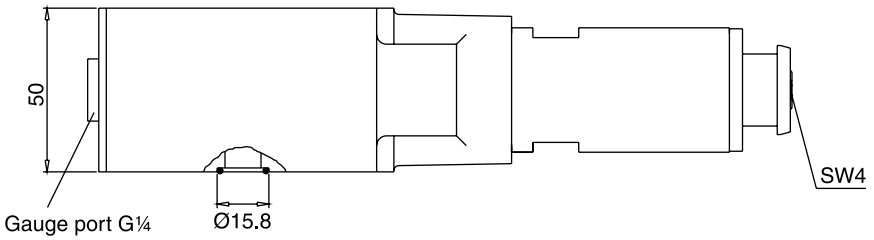

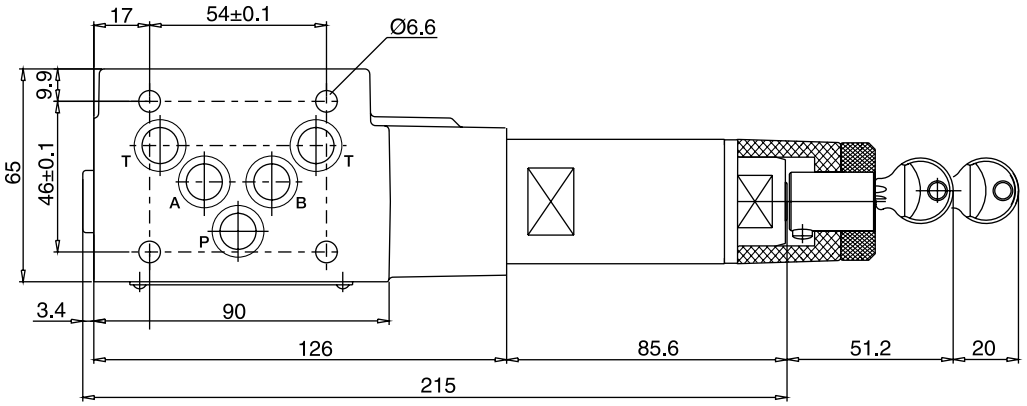

Seal kit order code		
Seal	**RDM2**	**RDM3**
V	SK-RDM2-V	SK-RDM3-V

The pilot operated pressure relief valves from the Parker Manapak series RM are in sandwich design for easy configuration of stack systems. Depending on type, pressure limiting can be achieved in ports P, A or B with unloading to port T.

RM valves may only be mounted in the defined mounting position.



RM6

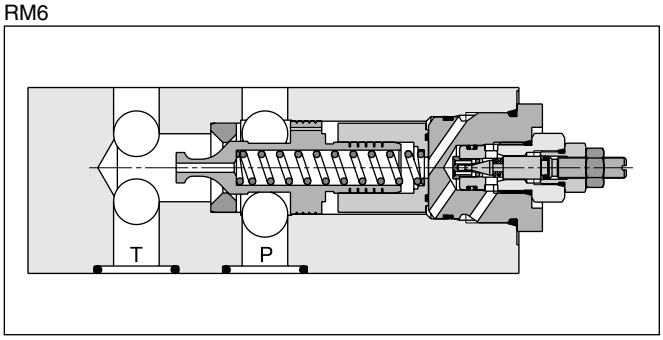

RM6

Features

- The valve bodies of the Parker Manapak valve series RM are made of steel.
- The pressure can be set by hexagon socket screw (RM4), hexagon socket screw or knob with cylinder lock (RM6).Piloting results in a flat p/Q performance curve.
- Piloting results in a flat p/Q performance curve.
- The orifices located in the main spool limit the pilot oil flow.

Schematics RM4-NG16, RM6-NG25 (only PT)

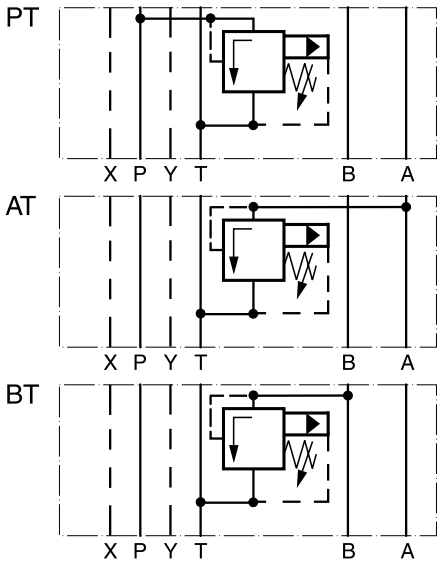

Technical data

General			
Design		Pilot operated pressure relief valve	
Actuation		hydraulic	
Size		**NG16**	**NG25**
Mounting interface		ISO 4401	
Mounting position		unrestricted	
Ambient temperature	[°C]	-20...+60	
$MTTF_D$ value	[years]	150	
Weight	[kg]	4.9	5.9
Hydraulic			
Max. operating pressure	[bar]	350	
Fluid		Hydraulic oil according to DIN 51524	
Fluid temperature	[°C]	-20...+70	
Viscosity, permitted	[cSt] / [mm²/s]	20 ... 400	
Viscosity, recommended	[cSt] / [mm²/s]	30 ... 80	
Filtration		ISO 4406 (1999); 18/16/13	

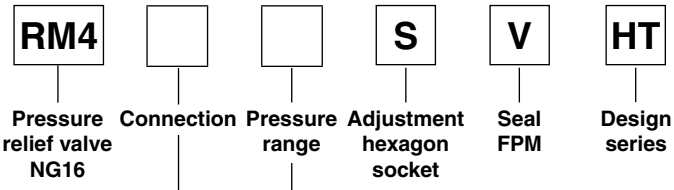

Code	Connection
PT	P to T
AT	A to T
BT	B to T

Code	Pressure range
07	5 to 65 bar
25	**10 to 250 bar**
35	10 to 350 bar

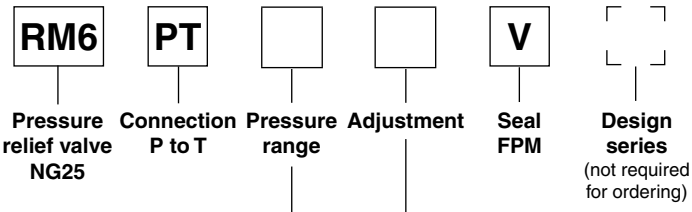

Code	Pressure range
07	5 to 70 bar
17	10 to 175 bar
25	**10 to 250 bar**
35	10 to 350 bar

Code	Adjustment
S	**Hexagon socket**
L	Cylinder lock

Bold letters =
Short-term availability

7

p/Q performance curves

RM4

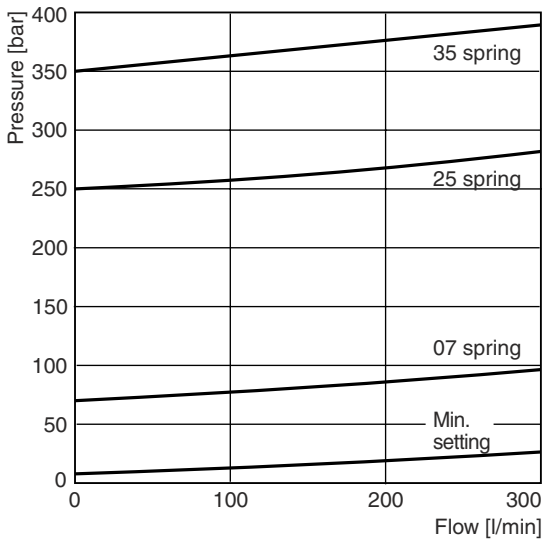

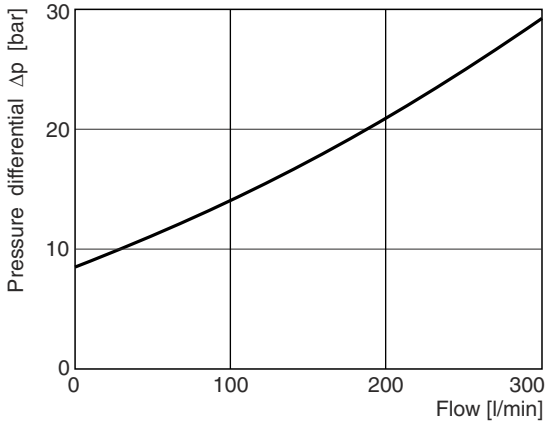

RM6

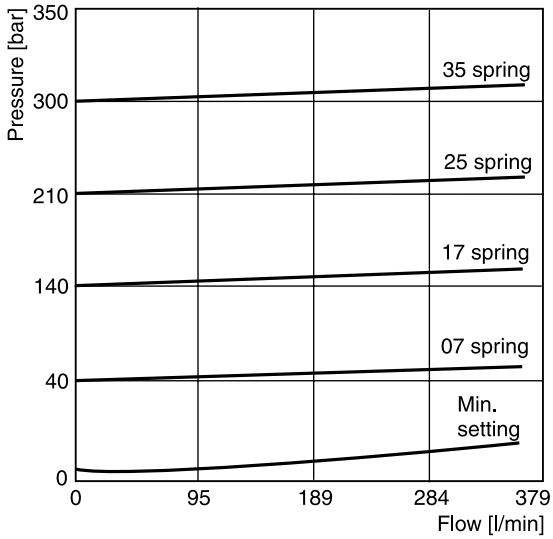

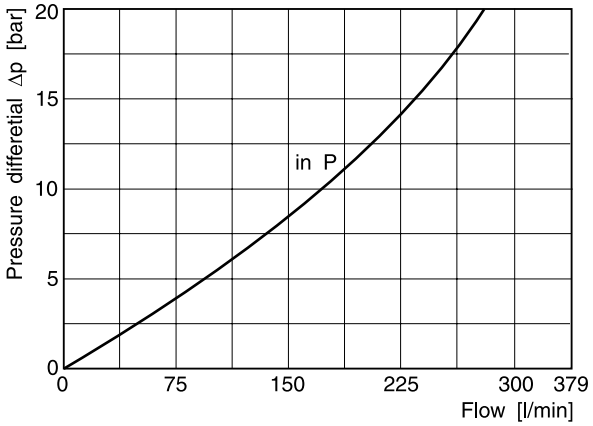

All characteristic curves measured with HLP46 at 50 °C.

7

RM4

Adjustment code S

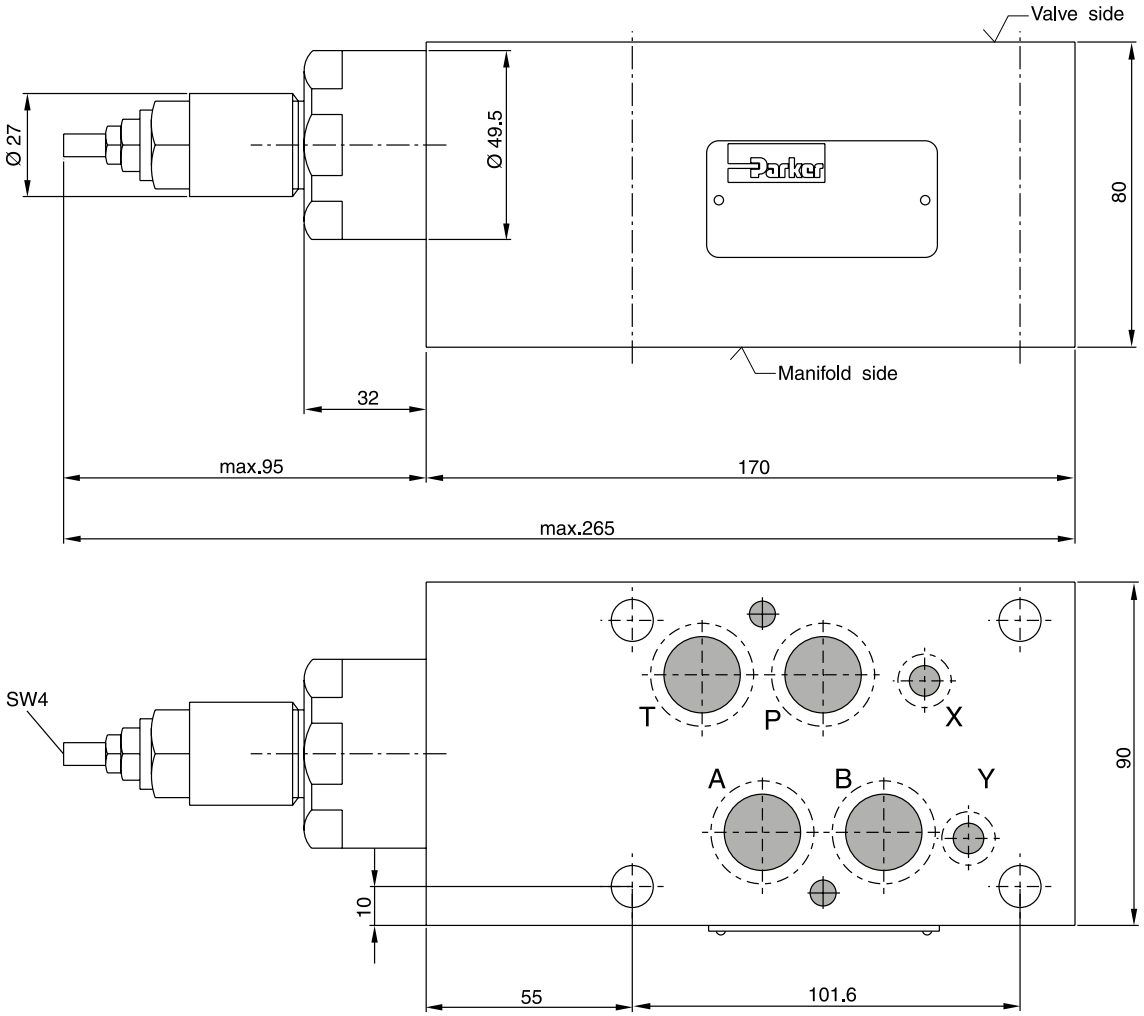

Seal kit RM4	
Seal	**Order code**
V	SK-RM4-V-HT

RM6

Adjustment Code S

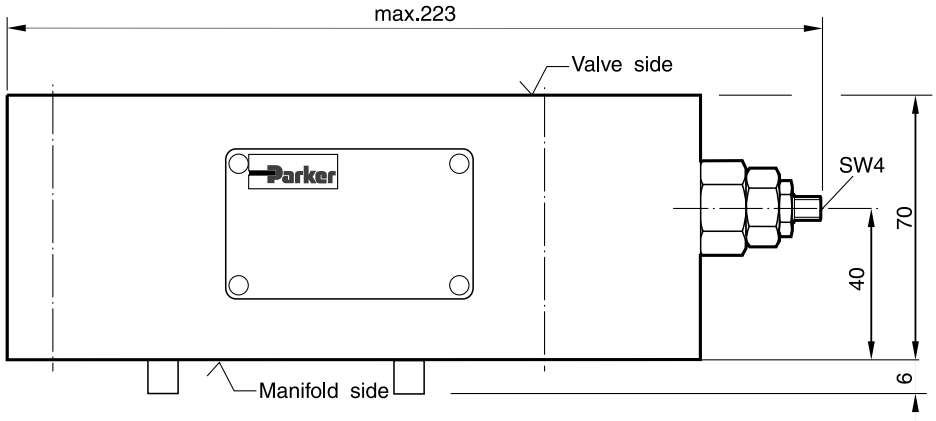

Adjustment Code L

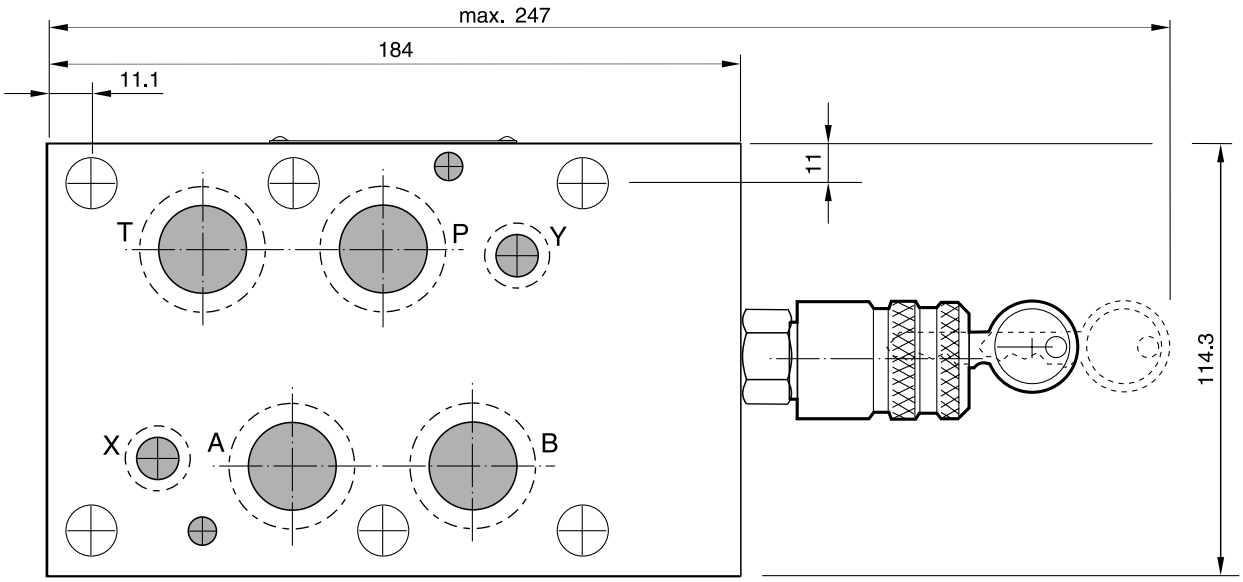

Seal kit RM6	
Seal	**Order code**
V	SK-RM6-V-11

Pilot operated pressure relief valves series ZDV are designed for maximum flow rates.

The relief function can be located between P and T, A and T, B and T or A and T + B and T for typical pressure relief functions.

For a pre-charge function the ZDV can be ordered with pressure function between A and B + B and A.

Features

- High flow capacity
- Pressure function in P, A, B or A + B
- Sizes
  ZDV01 - NG06 (CETOP 03)
  ZDV02 - NG10 (CETOP 05)



ZDV-P01

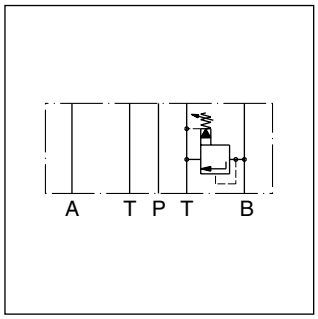

ZDV-B02

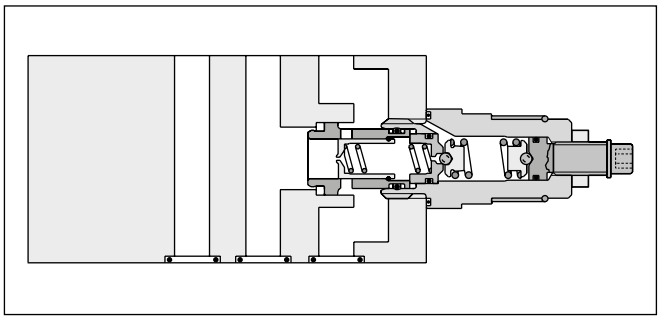

ZDV-B02

Ordering code

ZDV	–	☐	☐	–	☐	S0	–	D	☐
Pressure relief valve		Pressure control	Nominal size		Pressure stages	Hexagon screw with lock nut		Design series	Seal

Code	Size	Pressure control
P	NG06/10	P - T
A	NG06/10	A - T
B	NG06/10	B - T
AB	NG06/10	A - T & B - T
ABS	NG06/10	A - B & B - A

Code	Nominal size
01	NG06
02	NG10

Code	Seal
1	NBR
5	FPM

Code	Pressure stages
1	up to 70 bar
5 [1)]	up to 350 bar

Ordering code details see end of chapter.

[1)] Code ABS and size 10 up to 315 bar.

Technical data

General				
Size			**NG06**	**NG10**
Mounting interface			DIN 24340 A6 ISO 4401 NFPA D03	DIN 24340 A10 ISO 4401 NFPA D05
			CETOP RP 121	
Mounting position			unrestricted	
Ambient temperature		[°C]	-20...+60	
$MTTF_D$ value		[years]	150	
Weight	1 cartridge	[kg]	1.6	3.0
	2 cartridges	[kg]	2.5	3.7
Hydraulic				
Max. operating pressure		[bar]	350 (ZDV-ABS 315)	315
Nominal flow		[l/min]	80	140
Fluid			Hydraulic oil according to DIN 51524	
Fluid temperature		[°C]	-20...+70 (NBR: -25...+70)	
Viscosity	permitted	[cSt] / [mm^2/s]	20 ... 400	
	recommended	[cSt] / [mm^2/s]	30 ... 80	
Filtration			ISO 4406 (1999); 18/16/13	

p/Q performance curves

ZDV-P/A/B/ABS01

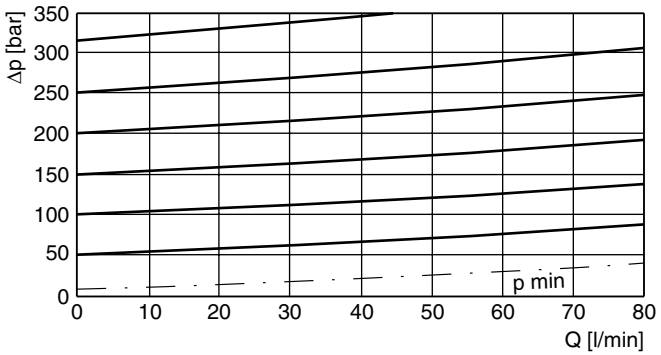

ZDV-AB01

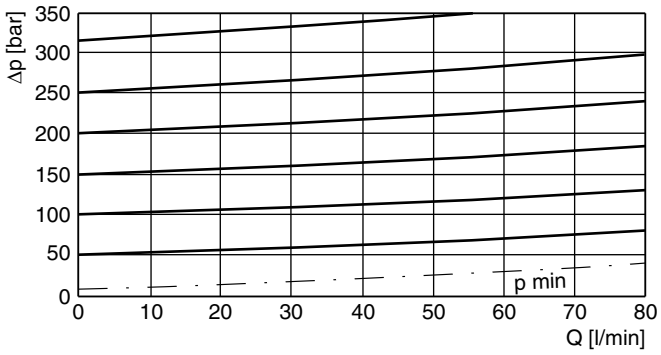

ZDV-P/A/B/AB02

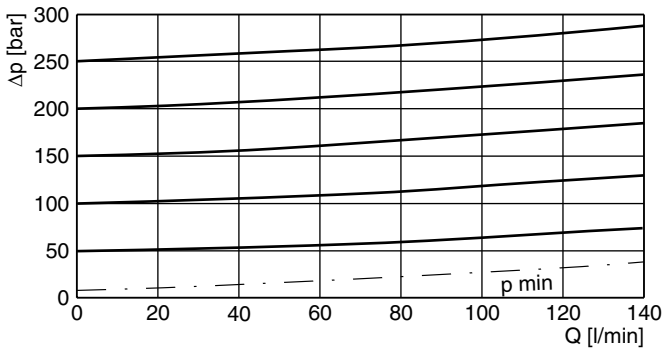

ZDV-ABS02

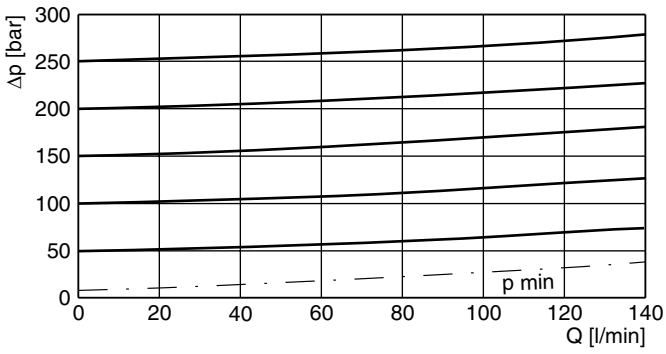

All characteristic curves measured with HLP46 at 50 °C.

ZDV01

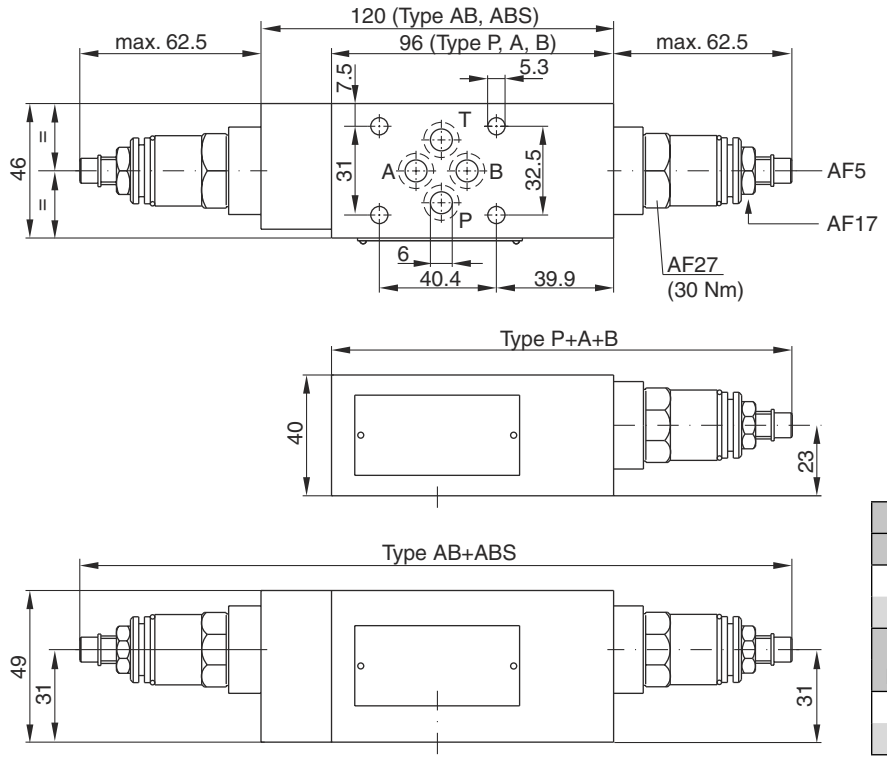

Seal kit	
Seal	**Order code**
1	098-91182-0
5	098-91183-0
Complete cartridge	
Pressure stage	**Order code**
1	098-91116-0
5	098-91117-0

7

ZDV02

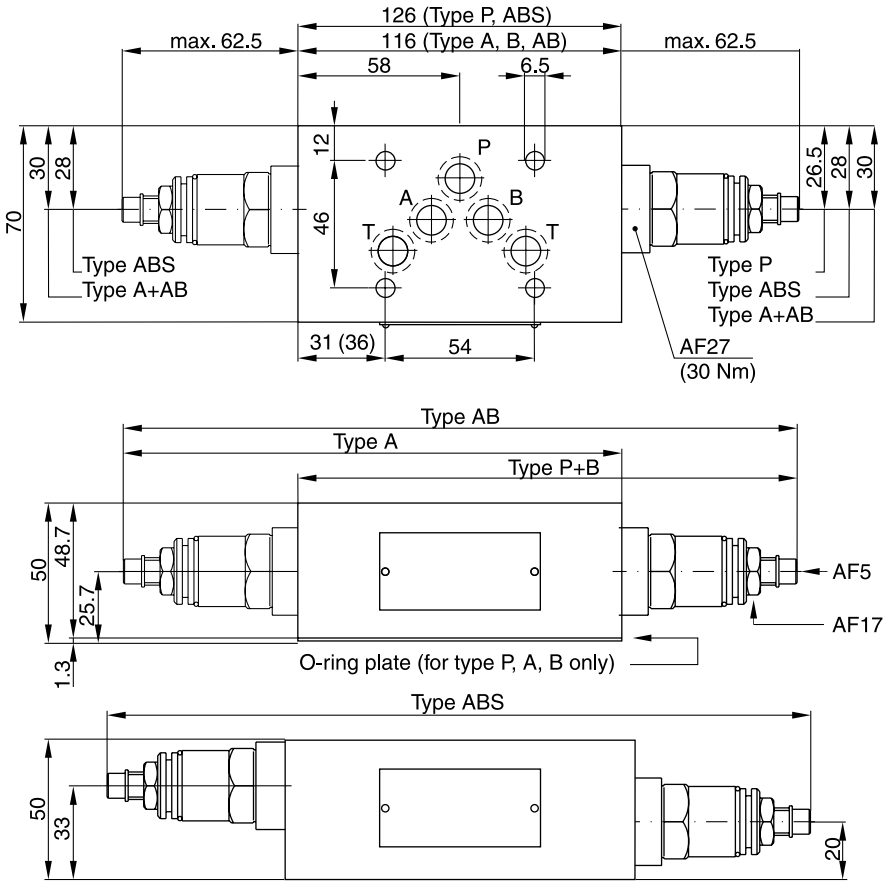

Seal kit	
Seal	**Order code**
1	098-91076-0
5	098-91077-0
Complete cartridge	
Pressure stage	**Order code**
1	098-91116-0
5	098-91117-0

ZDV01

Pressure control P-T

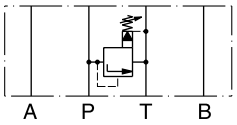

Series	Order No.
ZDV-P01-1-S0-D1	098-91201-0
ZDV-P01-5-S0-D1	098-91202-0

Pressure control A-T

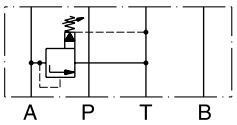

Series	Order No.
ZDV-A01-1-S0-D1	098-91203-0
ZDV-A01-5-S0-D1	098-91204-0

Pressure control B-T

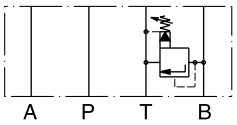

Series	Order No.
ZDV-B01-1-S0-D1	098-91205-0
ZDV-B01-5-S0-D1	098-91206-0

Pressure control A-T & B-T

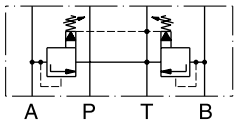

Series	Order No.
ZDV-AB01-1-S0-D1	098-91207-0
ZDV-AB01-5-S0-D1	098-91208-0

Pressure control A-B & B-A

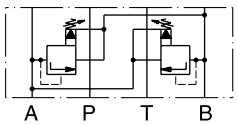

Series	Order No.
ZDV-ABS01-1-S0-D1	098-91209-0
ZDV-ABS01-5-S0-D1	098-91210-0

ZDV02

Pressure control P-T

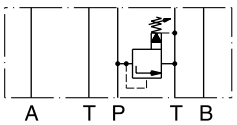

Series	Order No.
ZDV-P02-1-S0-D1	098-91034-0
ZDV-P02-5-S0-D1	098-91035-0

Pressure control A-T

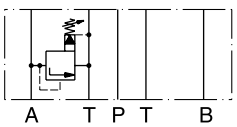

Series	Order No.
ZDV-A02-1-S0-D1	098-91036-0
ZDV-A02-5-S0-D1	098-91037-0

Pressure control B-T

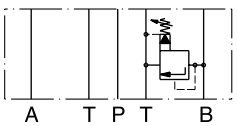

Series	Order No.
ZDV-B02-1-S0-D1	098-91038-0
ZDV-B02-5-S0-D1	098-91039-0

Pressure control A-T & B-T

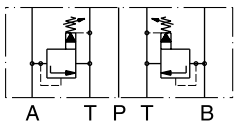

Series	Order No.
ZDV-AB02-1-S0-D1	098-91040-0
ZDV-AB02-5-S0-D1	098-91041-0

Pressure control A-B & B-A

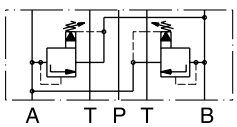

Series	Order No.
ZDV-ABS02-1-S0-D1	098-91042-0
ZDV-ABS02-5-S0-D1	098-91043-0

Series PRDM are direct operated pressure reducing valves to regulate pressure in one area of a hydraulic circuit at a predetermined level below normal system pressure. Additionally, an integral pressure relieving function for the secondary reduced pressure circuit is incorporated into the design.



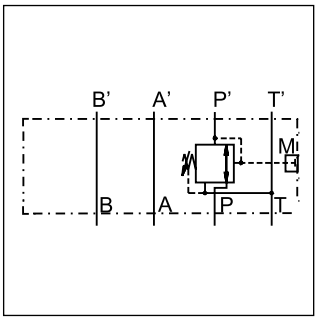

Example PP

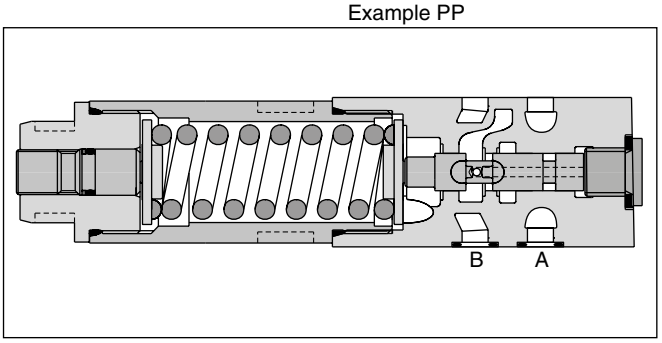

Funtion

These valves are "normally open" devices that allow fluid to flow through the controlled port during their non-actuated or "at rest" condition. When downstream pressure exceeds the value set by the spring force, the control piston moves off its seat, closing off the flow path and thus reducing the fluid passing through from the main system. The cushioned piston modulates to maintain the preset pressure in this branch of the hydraulic circuit. If, due to external forces, the pressure continues to rise in this branch circuit, the piston will keep moving against the spring force allowing fluid to be drained to the tank, thereby limiting maximum pressure to the valve's setting.

Features

- 3-way design for pressure relieving of the secondary side
- The direct operated, cushioned piston design results in fast response, low leakage and minimal hysteresis.
- Reduced pressure in the 'P', 'A' or 'B' port.
- Pressure settings:
  25, 64, 160, 210, 350 bar for PRDM2,
  19, 50, 100, 150, 210 bar for PRDM3.
- Gauge port
- PRDM2 - NG06 (CETOP 03)
  PRDM3 - NG10 (CETOP 05)

7

Gauge port option C

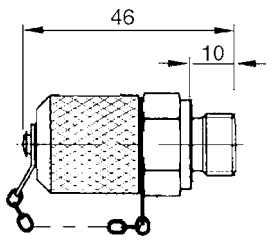

Schematics

PRDM*AA

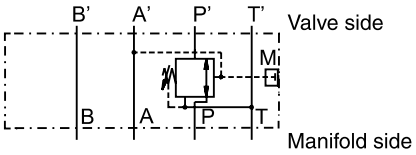

PRDM*BB

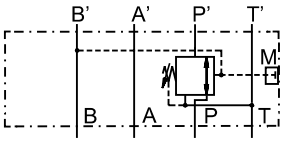

PRDM*PP

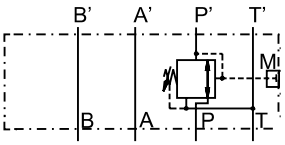

Ordering code

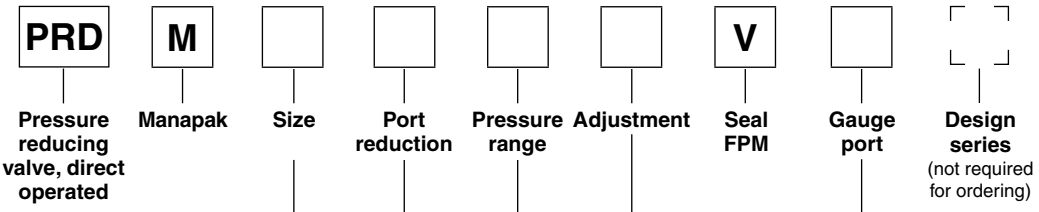

Code	Size
2	**NG06**
3	**NG10**

Code	Gauge port
G	**G¼**
C	Coupling M16

Code	Connection
PP	**P**
AA	**A**
BB	**B**

Code	Adjustment
S	**Hexagon socket**
L	Cylinder lock
K	Turning knob [1]

Pressure range	
Code	PRDM2
02	up to 25 bar
06	**up to 64 bar**
16	**up to 160 bar**
21	**up to 210 bar**
35	up to 350 bar
Code	PRDM3
01	**up to 19 bar**
05	**up to 50 bar**
10	up to 100 bar
15	**up to 150 bar**
21	**up to 210 bar**

Bold letters =
Short-term availability

Technical data

General				
Series			**PRDM2**	**PRDM3**
Size			**NG06**	**NG10**
Mounting interface			ISO 4401	
Ambient temperature		[°C]	-20...+60	
Weight		[kg]	1.3	2.6
$MTTF_D$ value		[years]	150	
Hydraulic				
Max. operating pressure	P, A, B	[bar]	350	315
	T	[bar]	50	50
Fluid			Hydraulic oil according to DIN 51524	
Fluid temperature		[°C]	-20...+70	
Viscosity,	permitted	[cSt] / [mm²/s]	20 ... 400	
	recommended	[cSt] / [mm²/s]	30 ... 80	
Filtration			ISO 4406 (1999); 18/16/13	

[1] NG06 only.

PRDM2 02

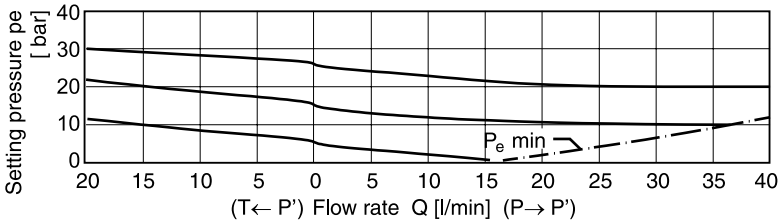

PRDM2 06

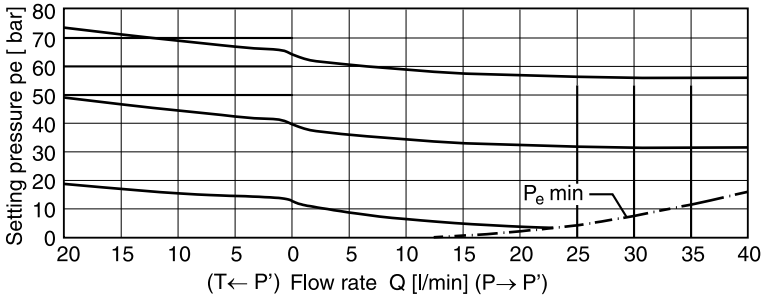

PRDM2 16/21

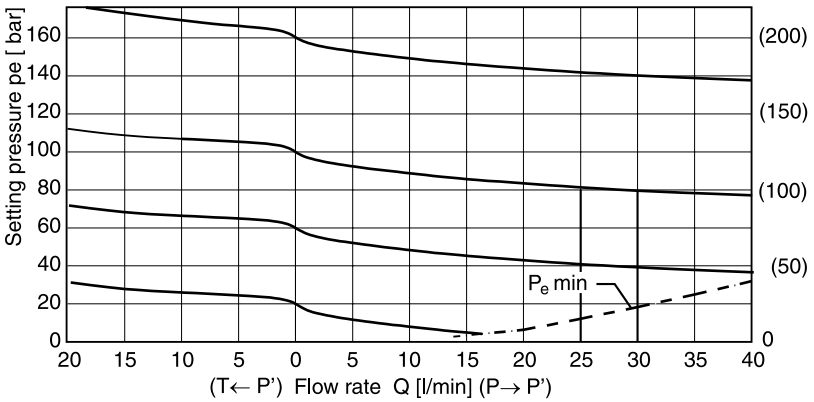

PRDM2 35

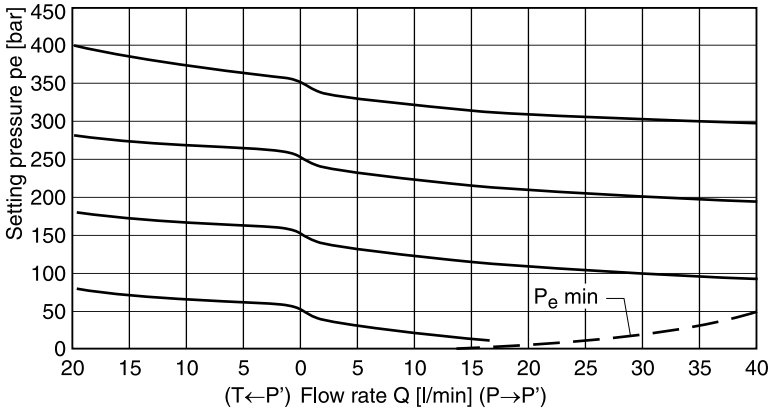

All characteristic curves measured with HLP46 at 50 °C.

PRDM3 01

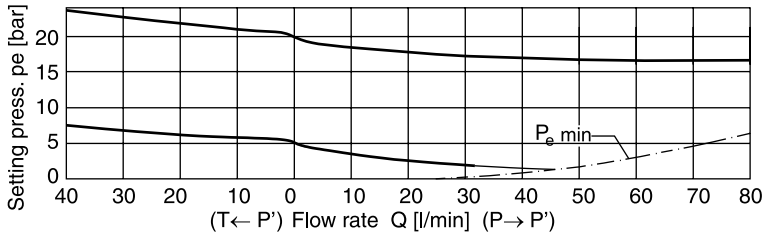

PRDM3 05

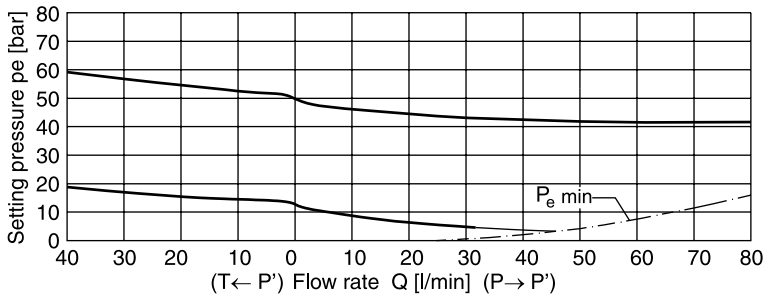

PRDM3 10

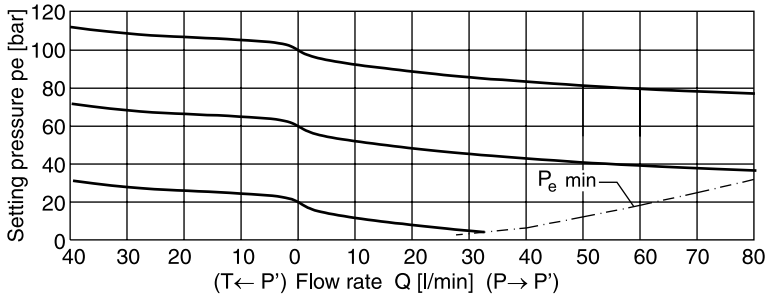

PRDM3 15

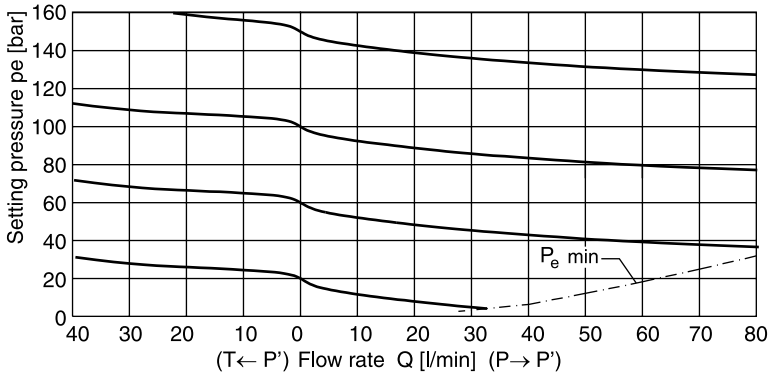

PRDM3 21

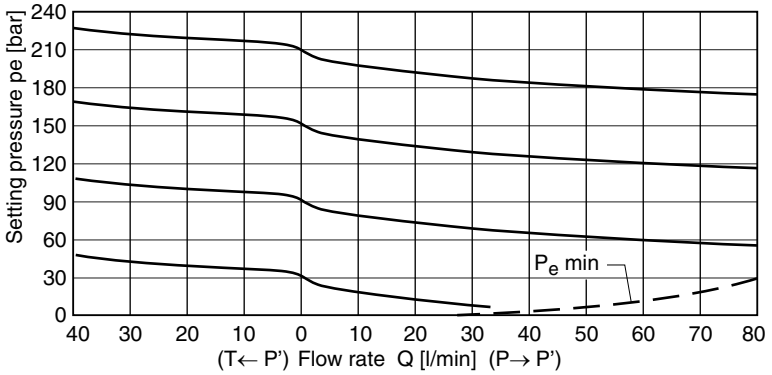

All characteristic curves measured with HLP46 at 50 °C.

PRDM2

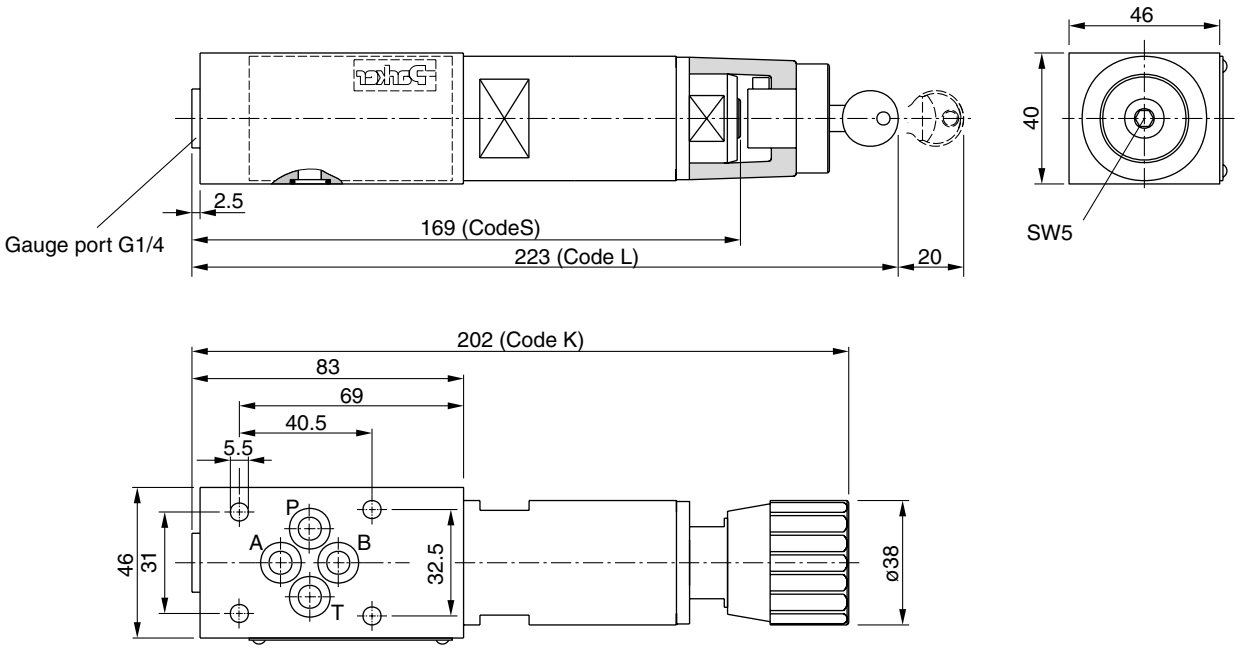

PRDM3

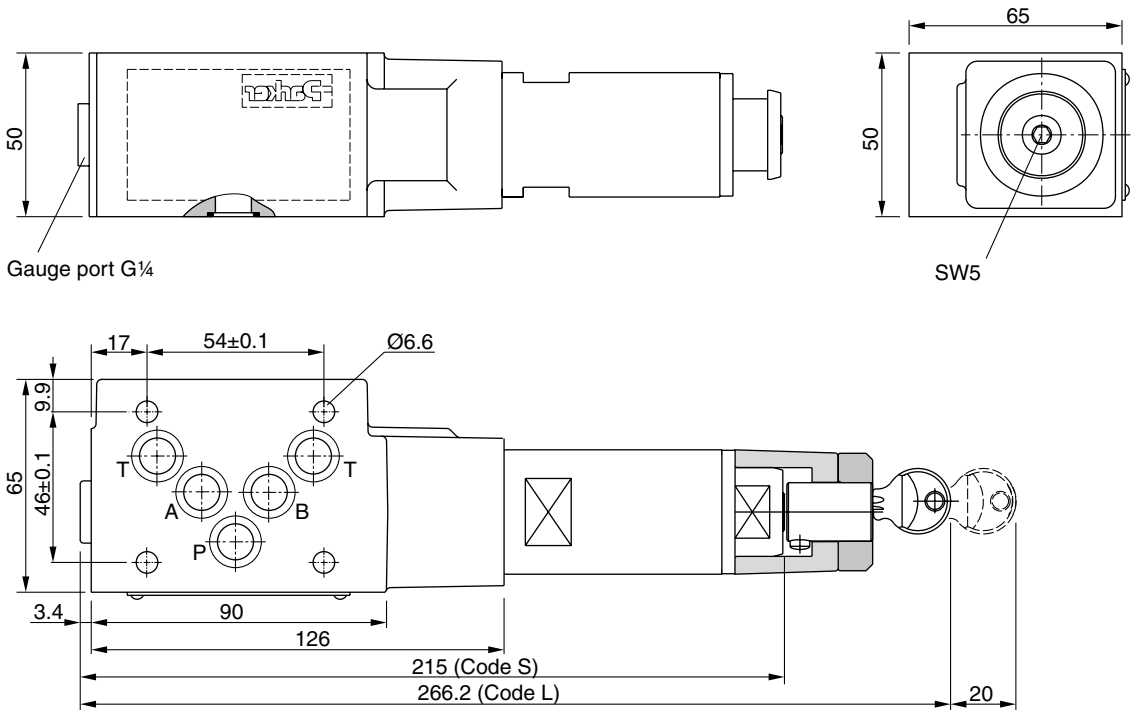

Seal kit order code		
Seal	**PRDM2**	**PRDM3**
V	SK-PRDM2-V	SK-PRDM3-V

The pilot operated pressure reducing valves series PRM are in sandwich design for easy configuration of stack systems. The reducing function is located in port P.

The pressure reduction for the desired connecting port is achieved by internal connections of the pilot and drain lines with the corresponding channels.



PRM6

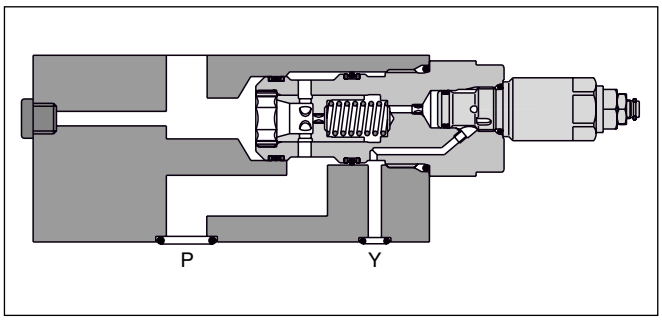

PRM4

Features

- The valve bodies of the Parker Manapak valve series PRM are made of steel.
- The control pressure range can be set by hexagon socket screw (PRM4), knob, or knob with cylinder lock (PRM6).
- Pressure gauge/measuring connections are available in the valve body.
- Piloting results in a flat p/Q performance curve.
- PRM4 - NG16 (CETOP 07)
  PRM6 - NG25 (CETOP 08)

Ordering code

PRM	4			S	V	HT
Pilot operated pressure reducing valve	Size NG16	Pressure reducing	Pressure range	Adjustment hexagon socket	Seal FPM	Design series

Code	Pressure reducing
PP	Function in P, reduced pressure in P
PA	Function in P, reduced pressure in A
PB	Function in P, reduced pressure in B

Code	Pressure range
07	4 to 70 bar
25	10 to 250 bar
35	10 to 350 bar

PRM	6				V	G	
Pilot operated pressure reducing valve	Size NG25	Pressure reducing	Pressure range	Adjustment	Seal FPM	Gauge port G¼"	Design series (not required for ordering)

Code	Connection
PA	P
AP	A

Code	Adjustment
L	Cylinder lock
K	Turning knob

Code	Pressure range
07	10 to 70 bar
17	10 to 175 bar
25	10 to 250 bar

Technical data

General			
Series		**PRM4**	**PRM6**
Size		**NG16**	**NG25**
Mounting interface		ISO 4401	
Ambient temperature	[°C]	-20...+60	
Weight	[kg]	5.0	5.6
$MTTF_D$ value	[years]	75	
Hydraulic			
Max. operating pressure	[bar]	350	250
Pressure reduction in channel		P, A, B	P, A
Fluid		Hydraulic oil according to DIN 51524	
Fluid temperature	[°C]	-20...+70	
Viscosity, permitted	[cSt] / [mm²/s]	20 ... 400	
Viscosity, recommended	[cSt] / [mm²/s]	30 ... 80	
Filtration		ISO 4406 (1999); 18/16/13	

Δp/Q performance curves

PRM4

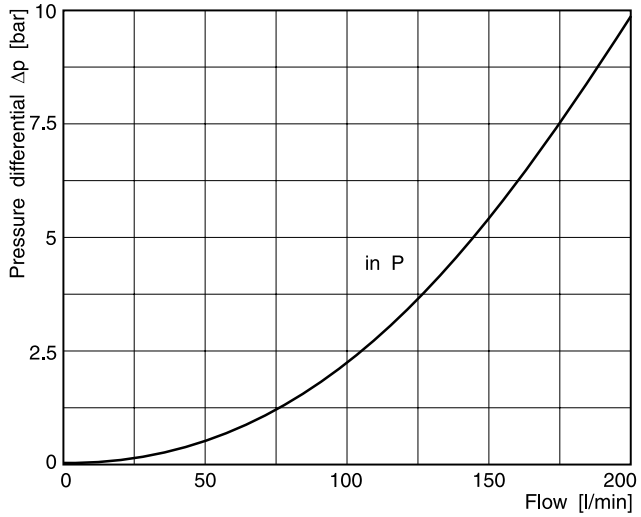

PRM6

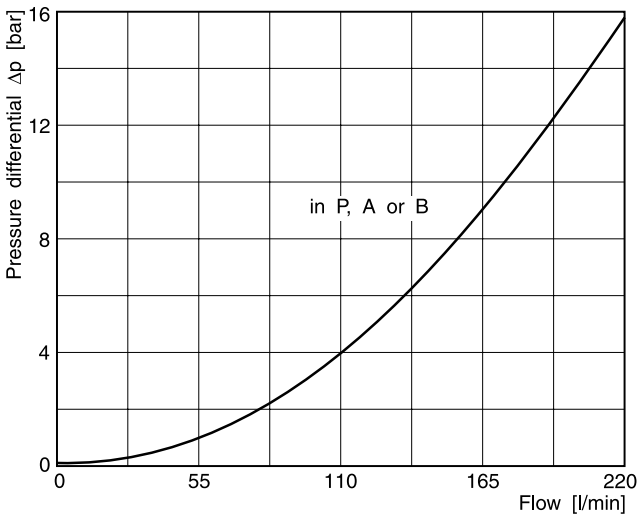

All characteristic curves measured with HLP46 at 50 °C.

Schematics

PRM4PP
PRM6PA

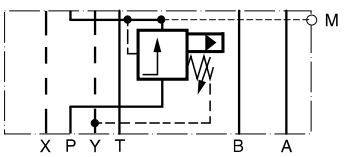

PRM4PA
PRM6AP

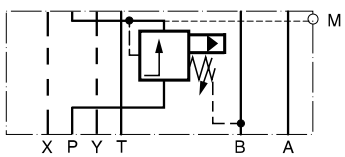

PRM4PB

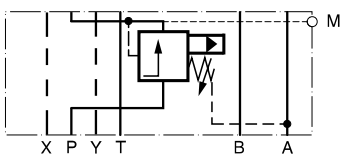

PRM4

Adjustment code S

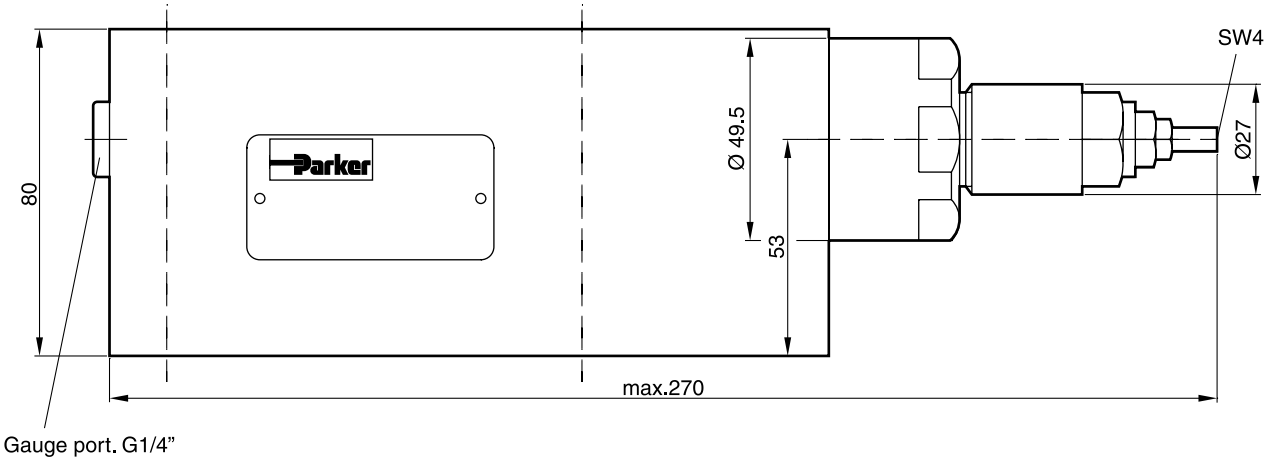

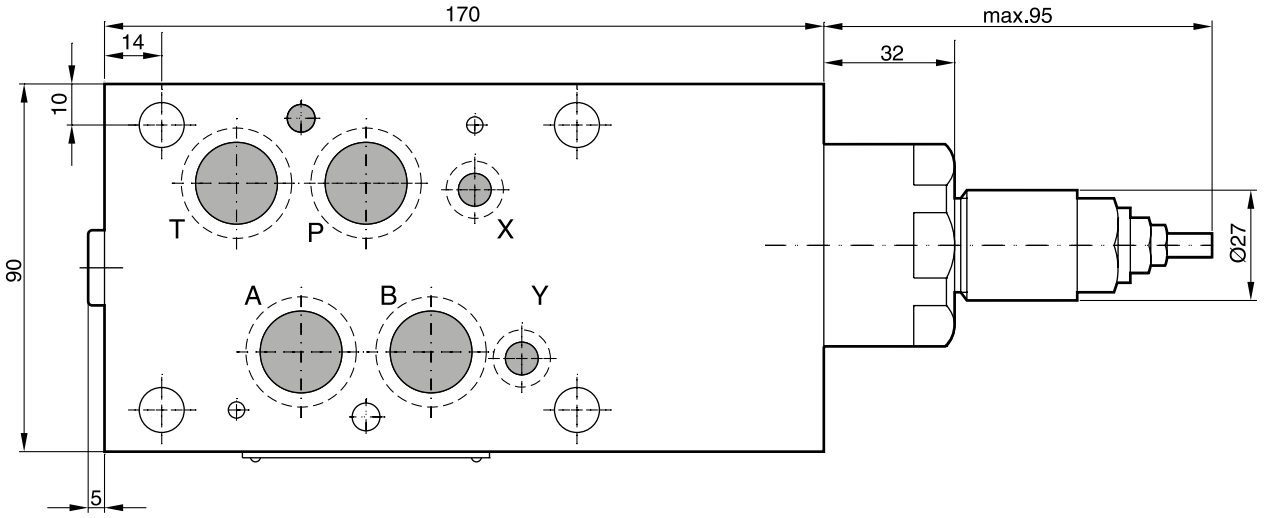

Seal kit PRM4	
Seal	**Order code**
V	SK-PRM4-V-10

PRM6

Adjustment code L

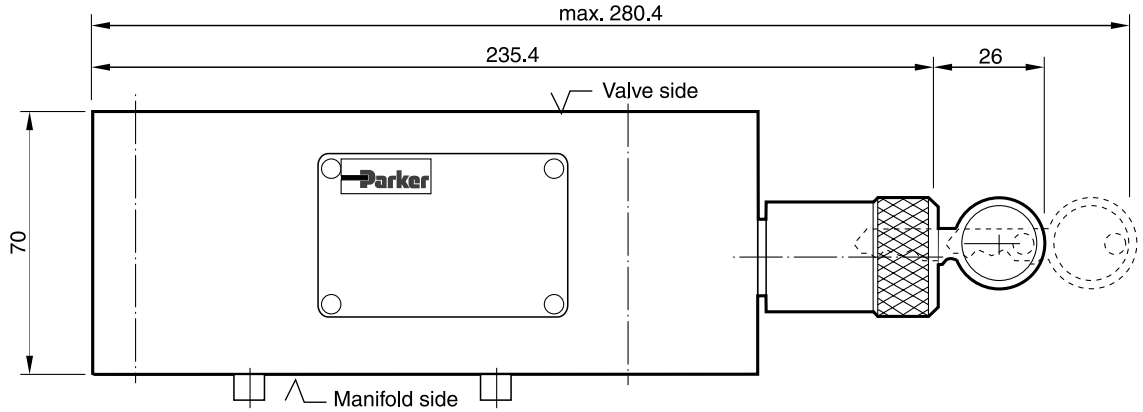

Adjustment code K

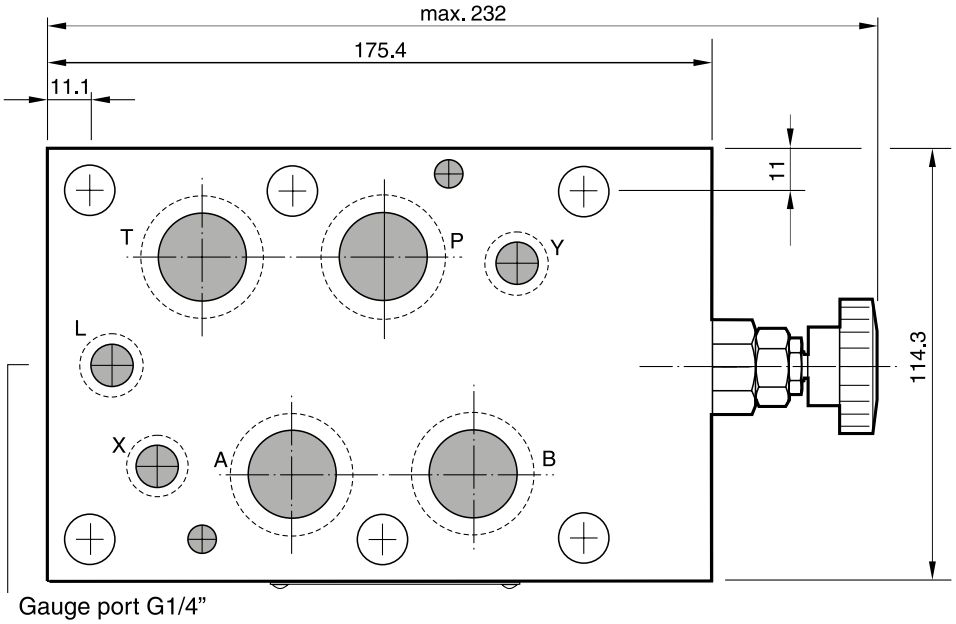

Seal kit PRM6	
Seal	**Order code**
V	SK-PRM6-V-25

Pilot operated pressure reducing valves series ZDR are designed for maximum flow rates.

The reducing function can be located in the ports P, A or B. The sizes NG06 and NG10 are equipped with an integral return flow check valve (reducing function in A or B).

Features

- High flow capacity
- Pressure function in P, A or B
- With integral return flow check valve
- Sizes:
  ZDR01 - NG06 (CETOP 03)
  ZDR02 - NG10 (CETOP 05)



ZDR-P01

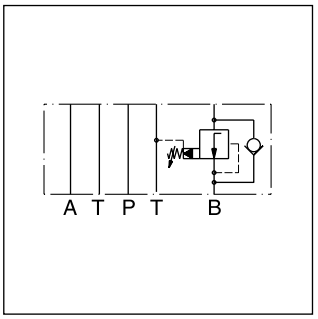

ZDR-B02

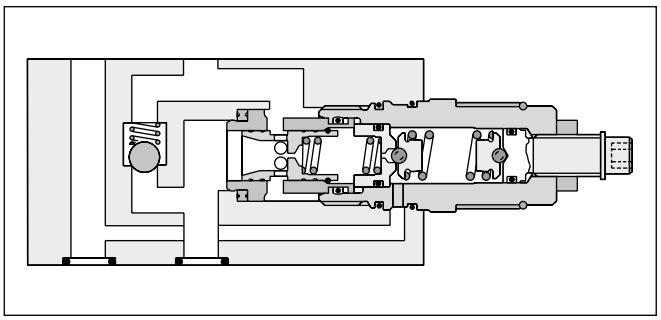

ZDR-B02

Technical data

General				
Size			**NG06**	**NG10**
Mounting interface			DIN 24340 A6 ISO 4401 NFPA D03	DIN 24340 A10 ISO 4401 NFPA D05
			CETOP RP 121	
Mounting position			unrestricted	
Ambient temperature		[°C]	-20...+60	
$MTTF_D$ value		[years]	150	
Weight	ZDR-P	[kg]	1.6	2.9
	ZDR-AR / BR	[kg]	1.8	3.0
Hydraulic				
Max. operating pressure		[bar]	350 (ZDR-AR / BR 315)	315
Nominal flow		[l/min]	80	120
Pilot oil		[l/min]	0.3	0.3
Fluid			Hydraulic oil according to DIN 51524	
Fluid temperature		[°C]	-20...+70 (NBR: -25...+70)	
Viscosity	permitted	[cSt] / [mm^2/s]	20 ... 400	
	recommended	[cSt] / [mm^2/s]	30 ... 80	
Filtration			ISO 4406 (1999); 18/16/13	

Ordering code

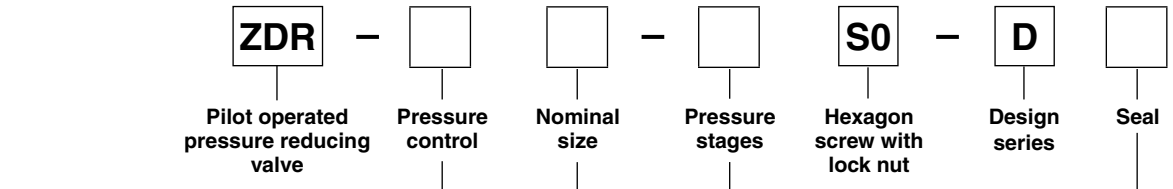

Code	Size	Pressure control
P	NG06/10	Pressure reducing in P with pressure gauge port M
AR	NG06/10	Pressure reducing in A with check valve
BR	NG06/10	Pressure reducing in B with check valve

Code	Seal
1	NBR
5	FPM

Code	Pressure stages
1	up to 70 bar
5 [1)]	up to 350 bar

Code	Nominal size
01	NG06
02	NG10

7

Ordering Code Details

ZDR01

Pressure reducing in P
with pressure gauge port M

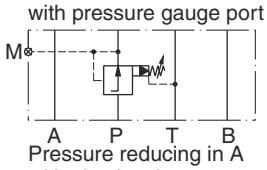

Series	Order No.
ZDR-P01-1-S0-D1	098-91179-0
ZDR-P01-5-S0-D1	098-91211-0

Pressure reducing in A
with check valve

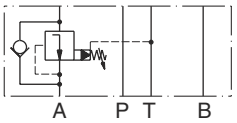

Series	Order No.
ZDR-AR01-1-S0-D1	098-91212-0
ZDR-AR01-5-S0-D1	098-91213-0

Pressure reducing in B
with check valve

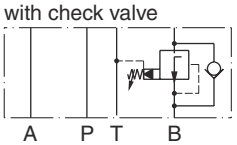

Series	Order No.
ZDR-BR01-1-S0-D1	098-91214-0
ZDR-BR01-5-S0-D1	098-91215-0

1 = 7 … 70 bar
5 = 7 … 315 bar

ZDR02

Pressure reducing at P
(with pressure gauge port M)

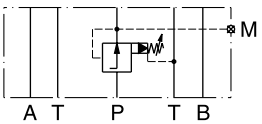

Series	Order No.
ZDR-P02-1-S0-D1	098-91050-0
ZDR-P02-5-S0-D1	098-91051-0

Pressure reducing at A
(with check valve)

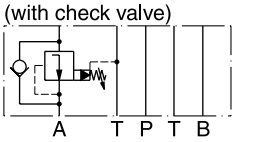

Series	Order No.
ZDR-AR02-1-S0-D1	098-91052-0
ZDR-AR02-5-S0-D1	098-91053-0

Pressure reducing at B
(with check valve)

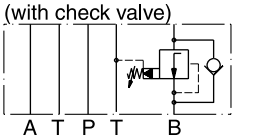

Series	Order No.
ZDR-BR02-1-S0-D1	098-91054-0
ZDR-BR02-5-S0-D1	098-91055-0

[1)] Code AR, BR and size 10 up to 315 bar.

p/Q performance curves

ZDR-P/AR/BR01

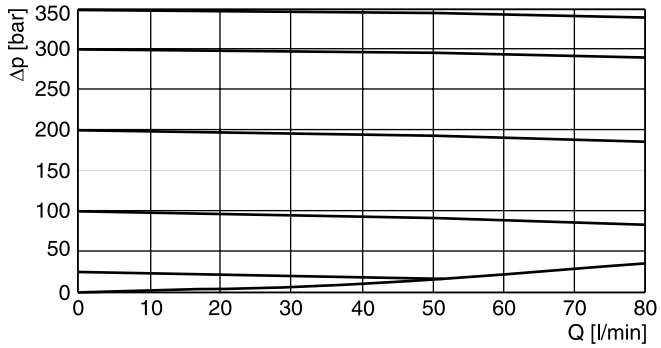

ZDR-P/AR/BR02

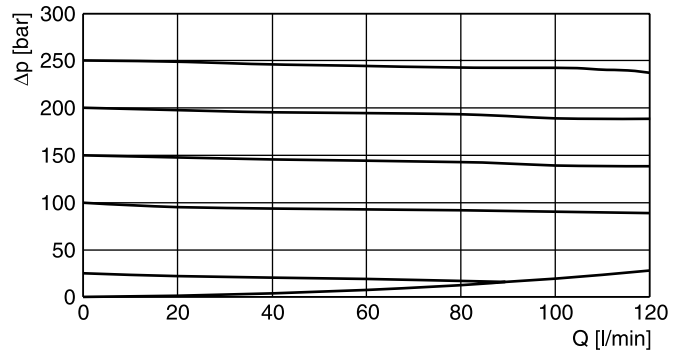

All characteristic curves measured with HLP46 at 50°C.

7

ZDR01

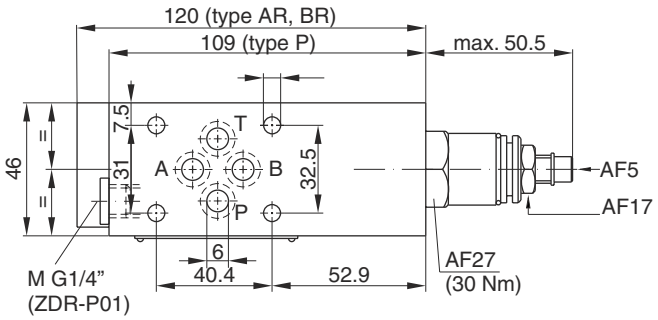

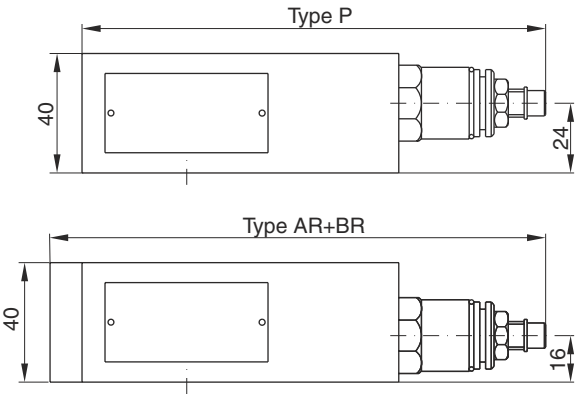

Seal kit	
Seal	**Order code**
1	098-91184-0
5	098-91185-0
Complete cartridge	
Pressure stage	**Order code**
1	098-91102-0
5	098-91103-0

7

ZDR02

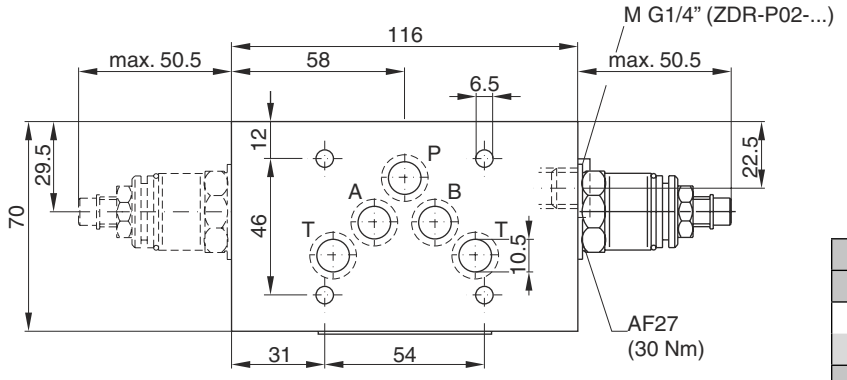

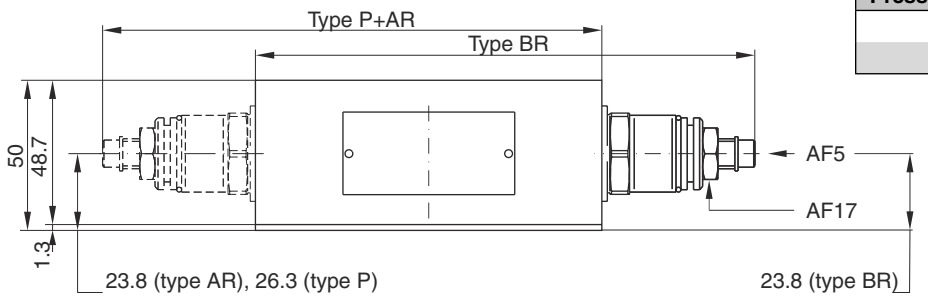

Seal kit	
Seal	**Order code**
1	098-91082-0
5	098-91083-0
Complete cartridge	
Pressure stage	**Order code**
1	098-91102-0
5	098-91103-0

Proportional pressure reducing valves series PRPM keep a constant pressure p_{red} on the secondary side – independent of pressure fluctuations on the primary side. The integrated pressure relief function obviates the need for an additional pressure relief valve on the secondary side and reliefs to tank, if the reduced pressure rises above the setting pressure.

The proportional pressure reducing valve reduces the pressure in output port p_{red} in proportion to the solenoid current. The PRPM works practically independent of the inlet pressure. In non-activated mode, the connection to the tank is fully open with a min. pressure corresponding to the spring force.

The gauge port is connected to the secondary side. Types A and B have an integrated bypass check valve. The PRPM provides optimum performance in combination with a digital amplifier module PCD00A-400.



PRPM2PP

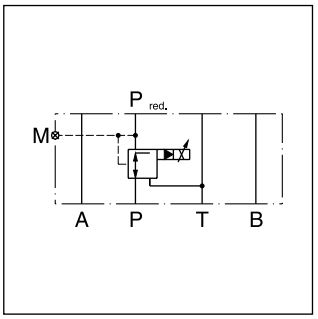

PRPM*PP

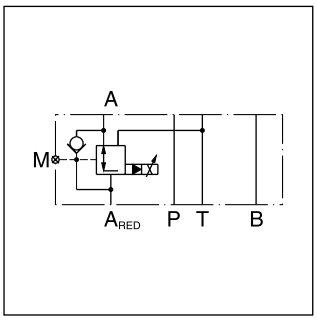

PRPM*AA

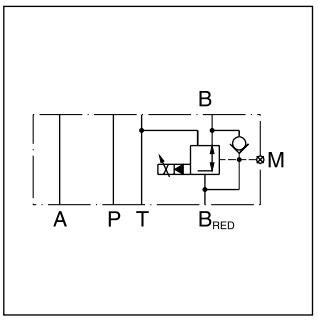

PRPM*BB

7

Ordering code

PRP	M				K	V
Proportional pressure reducing valve	Manapak	Nominal size	Reducing port	Pressure stage	Solenoid voltage 12 V, 1320 mA	Seal FPM

Code	Nominal size
2	NG06
3	NG10

Code	Port
AA	A
BB	B
PP	P

Code	Pressure stage [bar]
10	100
20	200
35	350

General				
Design			Pilot operated proportional pressure reducing valve	
Construction			Sandwich type	
Operation			Proportional solenoid	
Size			**NG06**	**NG10**
Mounting interface			ISO 4401	
Mounting position			unrestricted	
Ambient temperature		[°C]	-20 ... +60	
$MTTF_D$ value		[years]	75	
Weight		[kg]	2.0	3.2
Hydraulic				
Fluid			Hydraulic oil according to DIN 51524	
Fluid temperature		[°C]	-20 ... +70	
Viscosity,	permitted	[cSt] / [mm²/s]	20 ... 400	
	recommended	[cSt] / [mm²/s]	30 ... 80	
Max. operating pressure		[bar]	350	
Reduced nom. pressure		[bar]	100; 200; 350	
Max. flow		[l/min]	60	60
Pilot flow			see performance curves	
Filtration			ISO 4406 (1999); 18/16/13	
Resolution		[mA]	1 mA	
Repeatability		[%]	≤1 (with optimal dither signal)	
Hysteresis		[%]	≤4 (with optimal dither signal)	
Electrical				
Solenoid			Proportional solenoid, wet-pin push type, pressure tight	
Duty ratio		[%]	100 ED	
Protection class			IP65 in accordance with EN 60529 (with correctly mounted plug-in connector)	
Supply voltage		[V]	12 (1320 mA)	
Solenoid connection			Connector as per EN 175301-803	
Amplifier			PCD00A-400	

Pressure/flow NG06/NG10

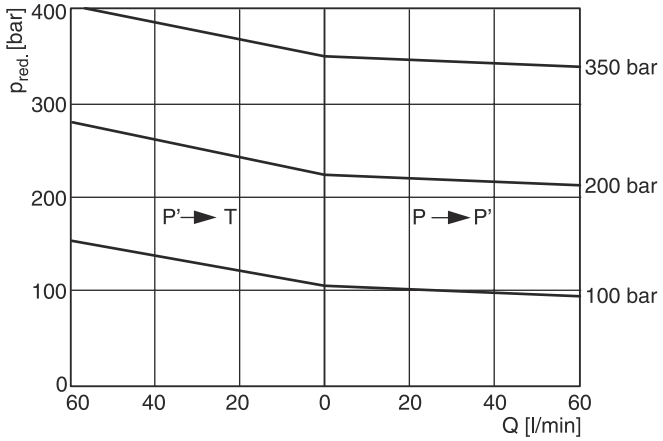

Pressure/adjustment at Q=0l/min (static)

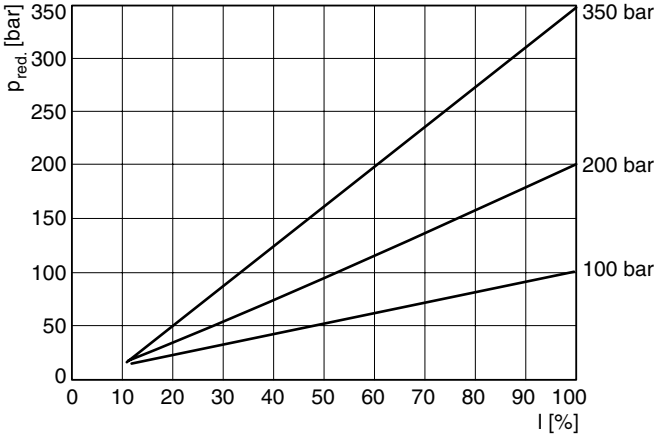

Pressure/flow (min. adjustable)

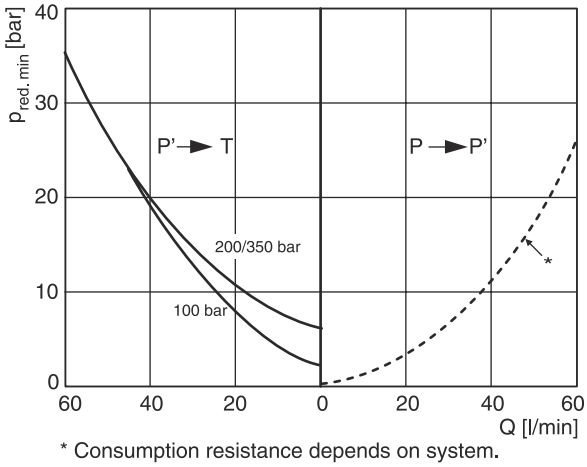

* Consumption resistance depends on system.

Pilot flow NG06/NG10

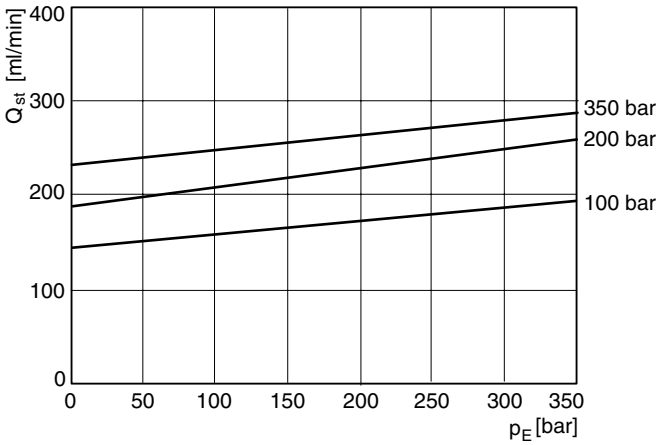

Pressure drop/flow over check valve

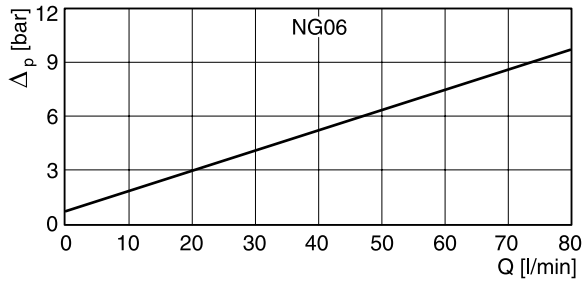

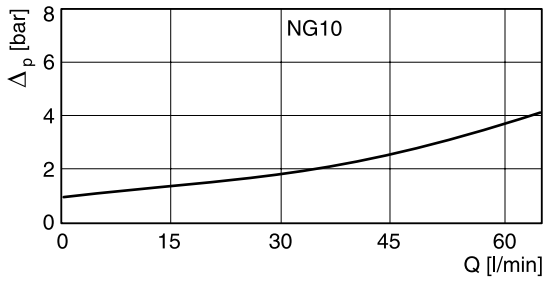

All characteristic curves measured with HLP46 at 50 °C.

PRPM2AA*, BB**

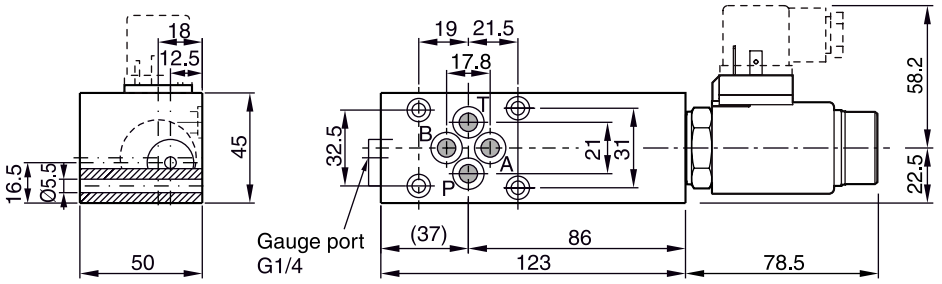

PRPM2PP*

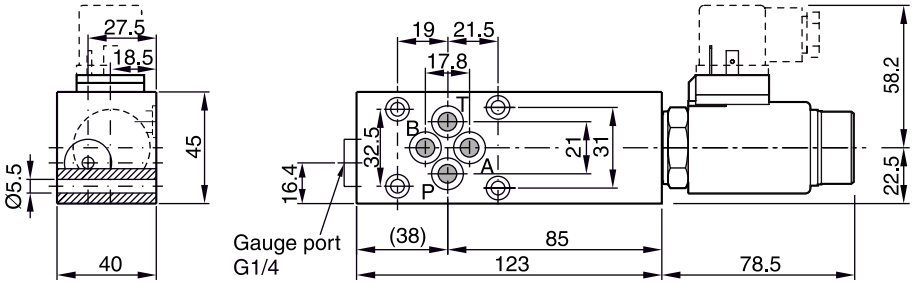

7

PRPM3AA*, BB**

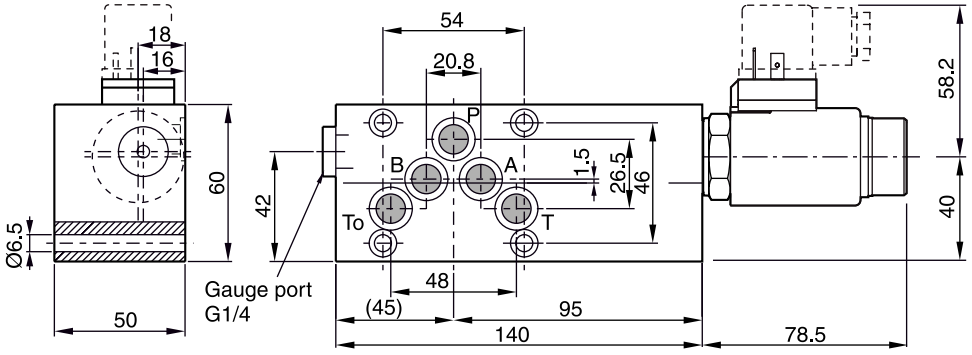

PRPM3PP*

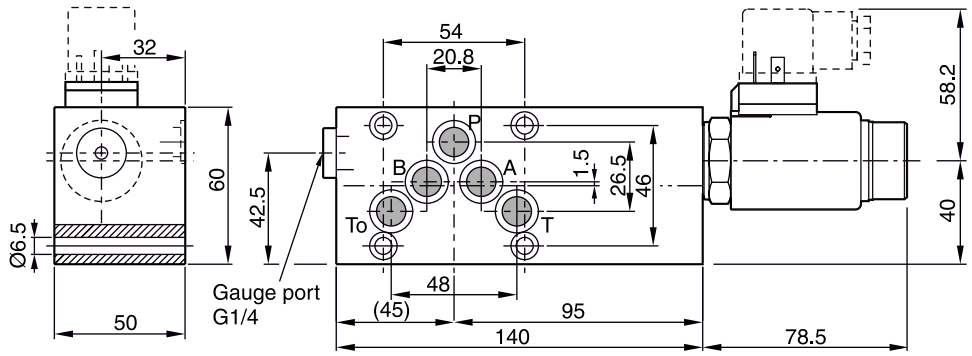

2-way pressure compensators in sandwich design maintain a constant pressure differential between ports P and A or P and B. Thus achieves a constant flow rate by a steady cross sectional opening of a directional control valve. The control pressure applied to the spring side of the compensator spool is supplied from port A or B via a shuttle valve. Flow rate regulation is automatically effective in the port with the highest pressure.

Application example

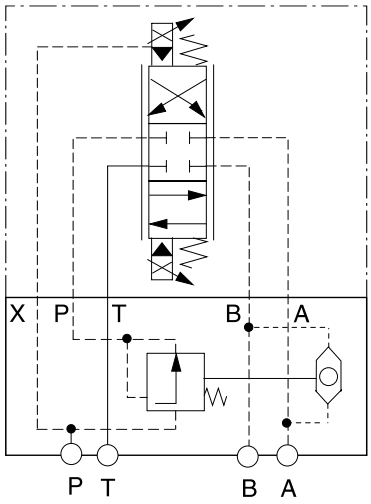

Proportional DC valve model D31FB with 2 way pressure compensator LCM3 maintains a constant flow rate.
The diagram shows the design according to code X.

Dimensions

LCM2

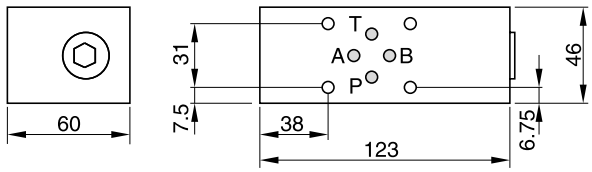

Mounting screws: BK 403 (4 x M5 x 90)
For mounting screws connected with the directional valves D1 or D31.

LCM3

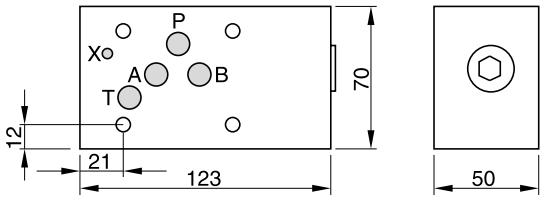

Mounting screws: BK 412 (4 x M6x 90)
The views show the mounting surface for the directional valve.

7

Ordering Code

LCM		PP		02	V	
Pressure compensator	Size	Control connection	Pilot oil	Differential pressure 10 bar	Seal FPM	Design series (not required for ordering)

Code	Size
2	NG06
3	NG10

Code	Pilot oil
omit	internal
X [1]	external

[1] NG10 only

Technical data

General				
Series			**LCM2**	**LCM3**
Size			**NG06**	**NG10**
Mounting interface			NFPA D03 CETOP 03	NFPA D05 CETOP 05
Ambient temperature		[°C]	-20...+60	
$MTTF_D$ value		[years]	150	
Hydraulic				
Max. operating pressure		[bar]	350	350
Pressure differential		[bar]	10	10
Fluid			Hydraulic oil according to DIN 51524	
Fluid temperature		[°C]	-20...+70	
Viscosity,	permitted	[cSt] / [mm²/s]	20 ... 400	
	recommended	[cSt] / [mm²/s]	30 ... 80	
Filtration			ISO 4406 (1999); 18/16/13	

Double-throttle check valves from the Parker Manapak series FM are in sandwich design for easy configuration of stack systems. Throttle and check valves are located in ports A and B.

FM2 and FM3 can be used as meter-in or meter-out throttle by changing the mounting position.

FM4 can be selected by ordering code as meter-in or meter-out throttle. FM6 is only available as meter-out control.

The throttle check valve can also be used to influence the switching time of pilot operated directional valves. In this case, the valve is positioned between the pilot stage (CETOP 03, NG06) and the main stage (CETOP 05, NG10 up to CETOP 10, NG32).



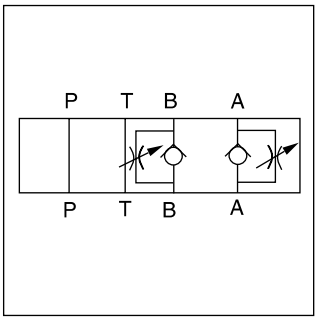

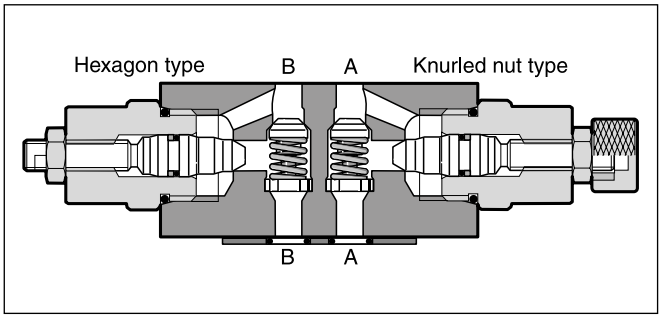

Features

- Two types of metering needle design can be selected when ordering FM2 and FM3 valves to achieve the throttle characteristics required to suit the application.
- Large bypass check valves allow high flow at low pressure drop.
- NG06 - FM2 (CETOP 03)
  NG10 - FM3 (CETOP 05)
  NG16 - FM4 (CETOP 07)
  NG25 - FM6 (CETOP 08)

7

Technical data

General					
Series		**FM2**	**FM3**	**FM4**	**FM6**
Size		**NG06**	**NG10**	**NG16**	**NG25**
Mounting interface		NFPA D03 CETOP 03	NFPA D05 CETOP 05	NFPA D07 CETOP07	NFPA D08 CETOP 08
Mounting position		unrestricted			
Ambient temperature	[°C]	-20...+60			
$MTTF_D$ value	[years]	150			
Weight	[kg]	1.3	2.4	5.4	7.9
Hydraulic					
Max. operating pressure	[bar]	350	350	350	210
Max. Flow	[l/min]	53	76	200	341
Opening pressure	[bar]	0.3	0.3	0.3	0.3
Meter-in throttle		•	•	•	—
Meter-out throttle		•	•	•	•
Fluid		Hydraulic oil according to DIN 51524			
Fluid temperature	[°C]	-20...+70			
Viscosity permitted	[cSt] / [mm²/s]	20...400			
Viscosity recommended	[cSt] / [mm²/s]	30...80			
Filtration		ISO 4406 (1999); 18/16/13			

FM		DD			V	
Throttle valve	**Valve size**	**Throttle check valve in the working port A and B**	**Needle design**	**Adjustment**	**Seal FPM**	**Design series** (not required for ordering)

Code	Size
2	**NG06**
3	**NG10**

Code	Adjustment
K	**Knob**
S	**Hexagon socket**

Code	Needle
omit	**Standard conical**
D	Fine, cylindrical Hollow bored with V notch

Bold letters =
Short-term availability

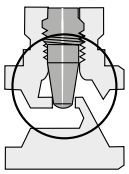	A two-stage needle provides fine adjustment in the lower flow range with 3 adjustment rotations. After 3 more rotations, the valve is completely open.
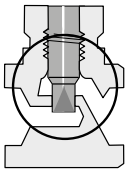	Design "D" A cylindrical needle with a V notch allows the fine adjustment over the entire setting range.

7

FM	4	DD		V	HT
Throttle valve	**Valve size NG16**	**Throttle check valve in the working port A and B**	**Meter-out / meter-in throttling**	**Seal FPM**	**Design series**

Code	Description
T	Meter-in
F	Meter-out

FM	6	DD	K	V	
Throttle valve	**Valve size NG25** [1]	**Throttle check valve in the working port A and B**	**Adjusting knob**	**Seal FPM**	**Design series** (not required for ordering)

[1] Only meter-out available.

FM2 standard needle

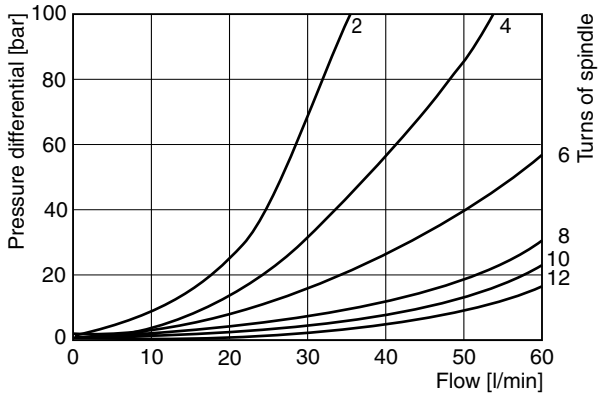

FM2D needle with V notch

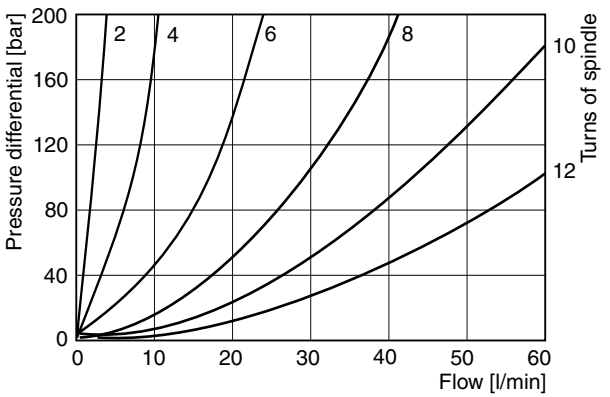

FM2 flow, check valve

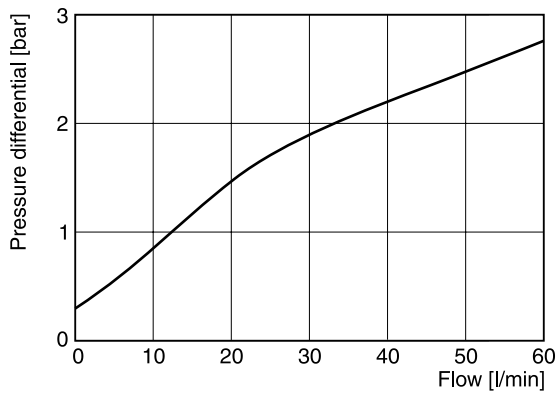

FM3 standard needle

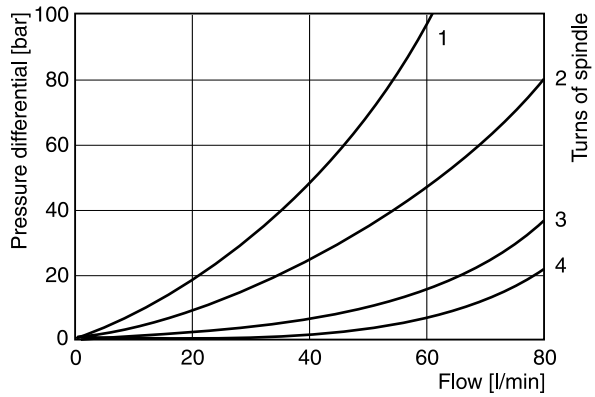

FM3D needle with V notch

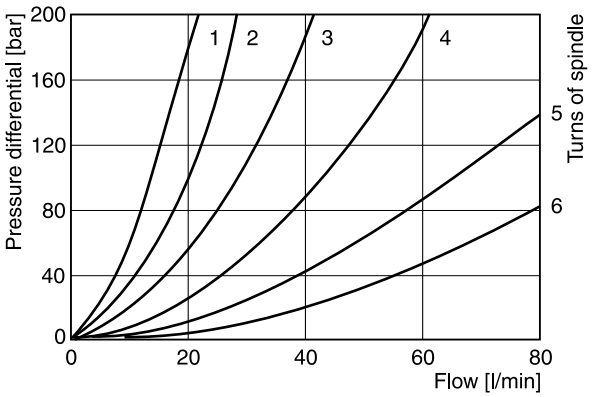

FM3 flow, check valve

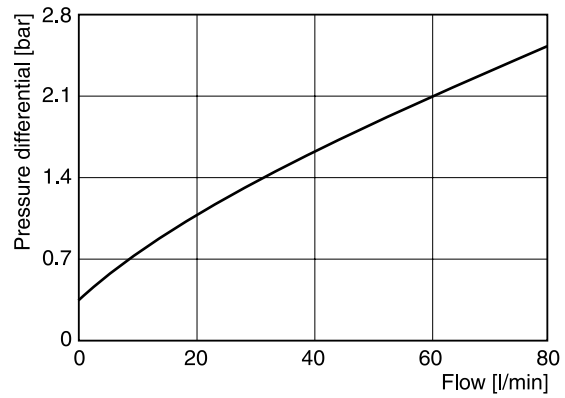

All characteristic curves measured with HLP46 at 50 °C.

7

FM4 with standard needle

1 to 5 number of needle rotations

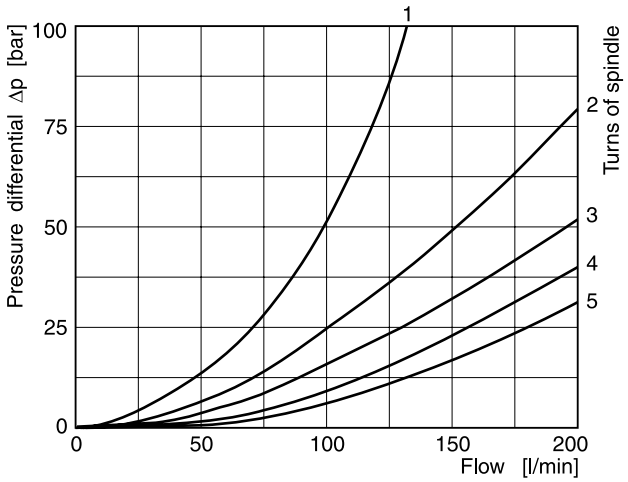

FM4 flow, check valve

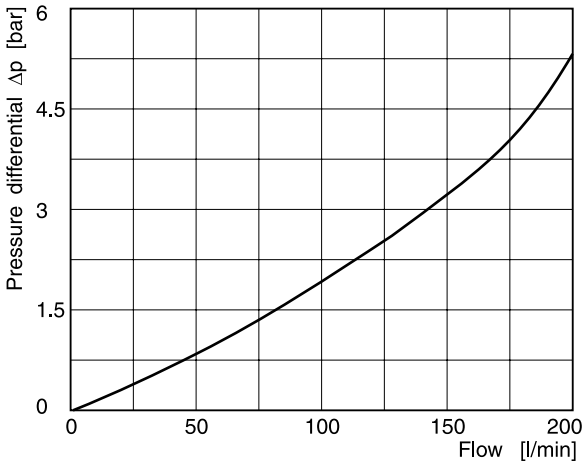

FM6 with standard needle

1 to 5 number of needle rotations

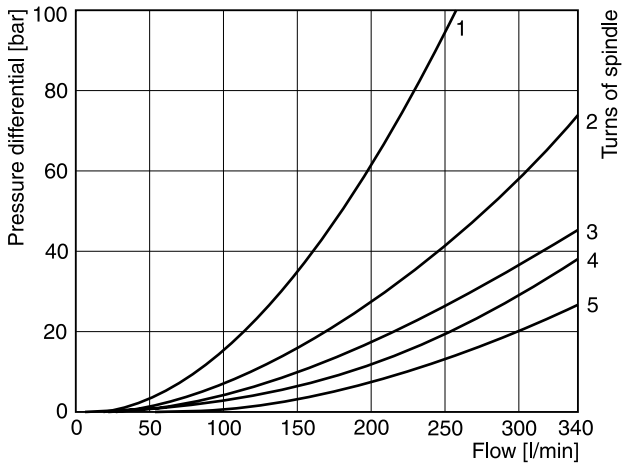

FM6 flow, check valve

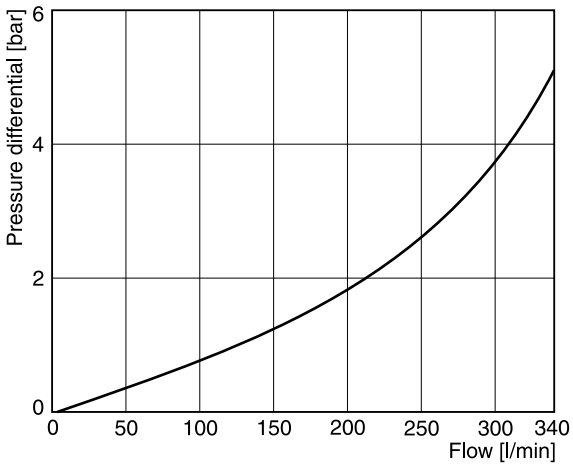

7

All characteristic curves measured with HLP46 at 50 °C.

FM2

Adjustment code K

Meter-in

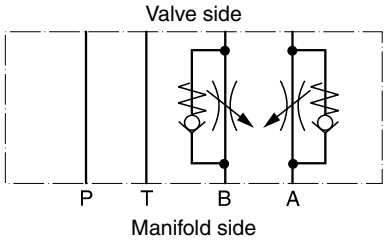

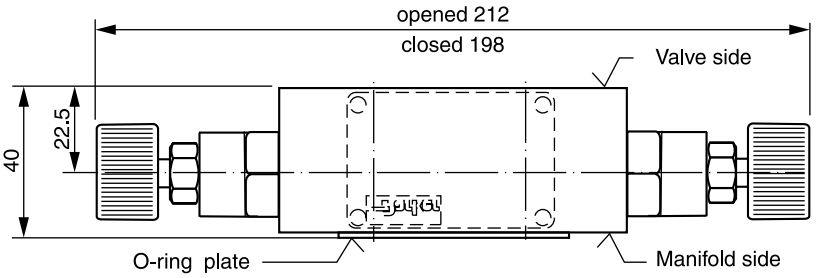

Meter-in or meter-out

A functional change is achieved by rotating the mounting position of the valve 180° about the longitudinal axis (A-B).

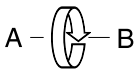

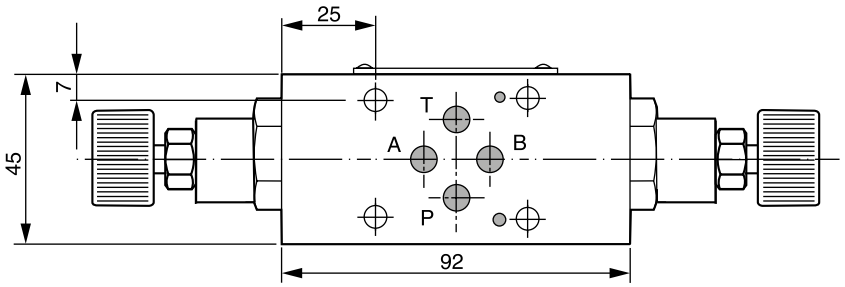

Meter-out

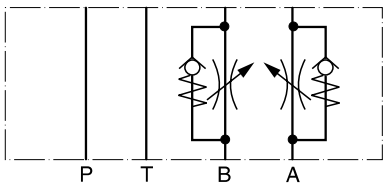

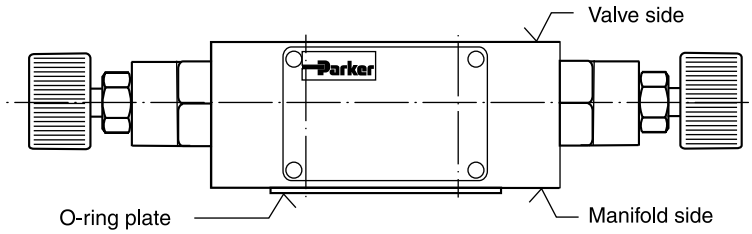

Adjustment code S

(Meter-out shown)

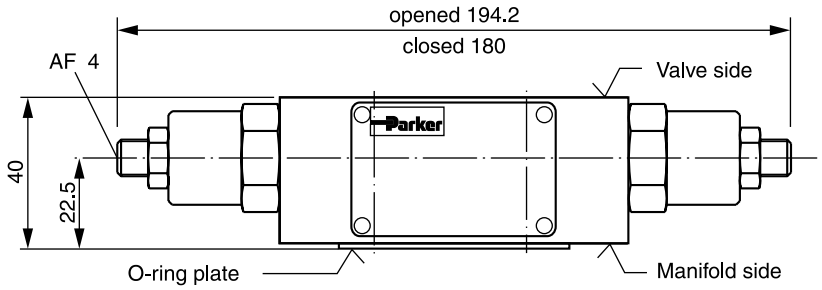

Seal kit FM2	
Seal	**Order code**
V	SK-FM2-V-20

Note:

The O-ring plate (with O-rings) for sealing the connecting surface of the manifold side is included. The O-ring plate is always mounted on the manifold side.

FM3

Adjustment code K

Meter-in

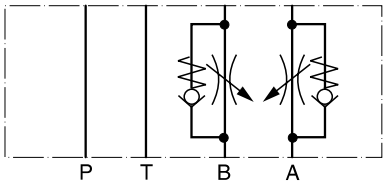

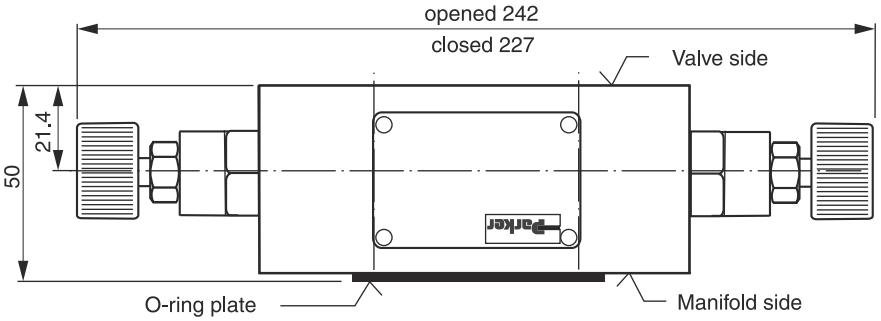

Meter-in or meter-out

A functional change is achieved by rotating the mounting position of the valve 180º about the transverse axis (P).



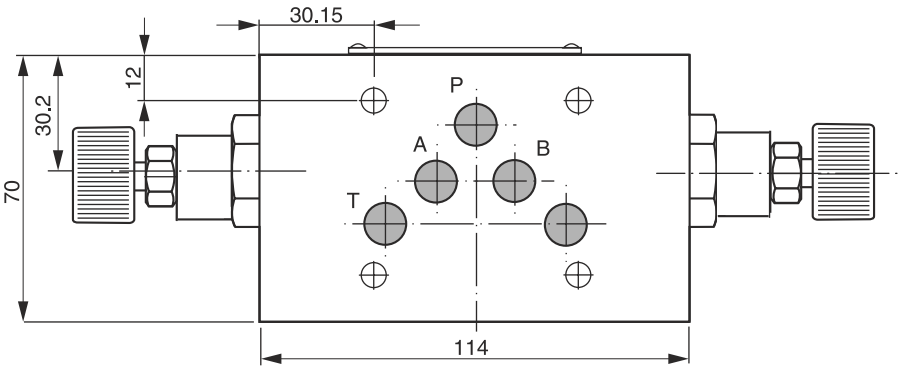

Meter-out

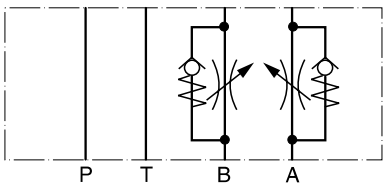

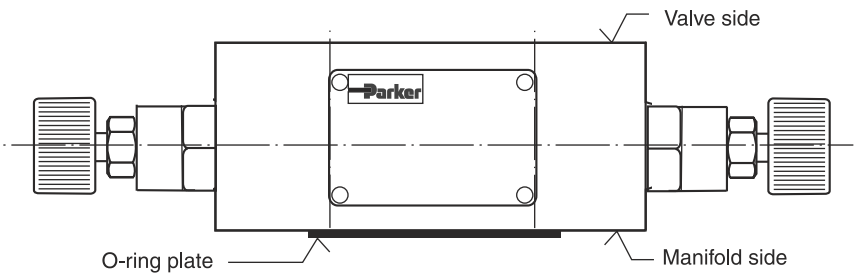

Adjustment code S

(Meter-out shown)

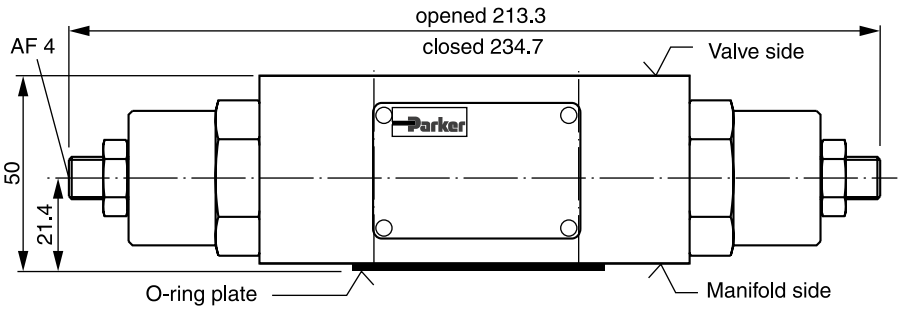

Seal kit FM3	
Seal	**Order code**
V	SK-FM3-V-20

Note:

The O-ring plate (with O-rings) for sealing the connecting surface of the manifold side is included. The O-ring plate is always mounted on the manifold side.

7

FM4

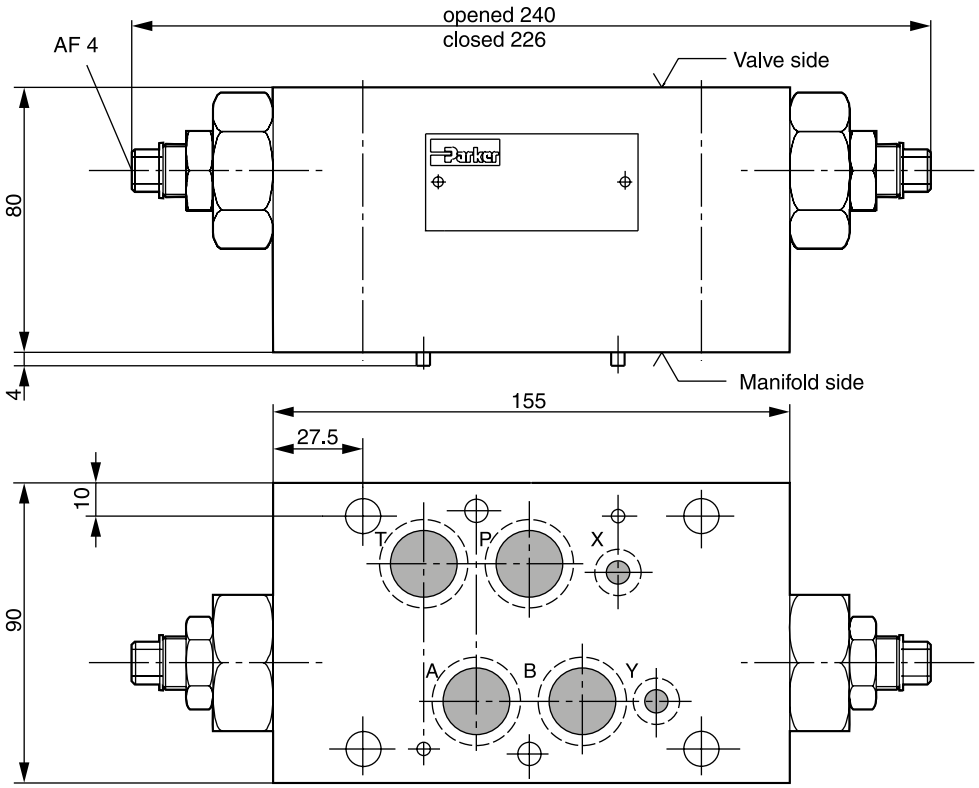

7

Meter-in

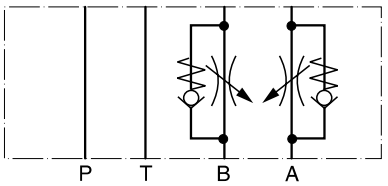

Meter-out

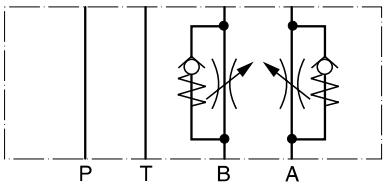

Seal kit FM4	
Seal	**Order code**
V	SK-FM4VHT

FM6

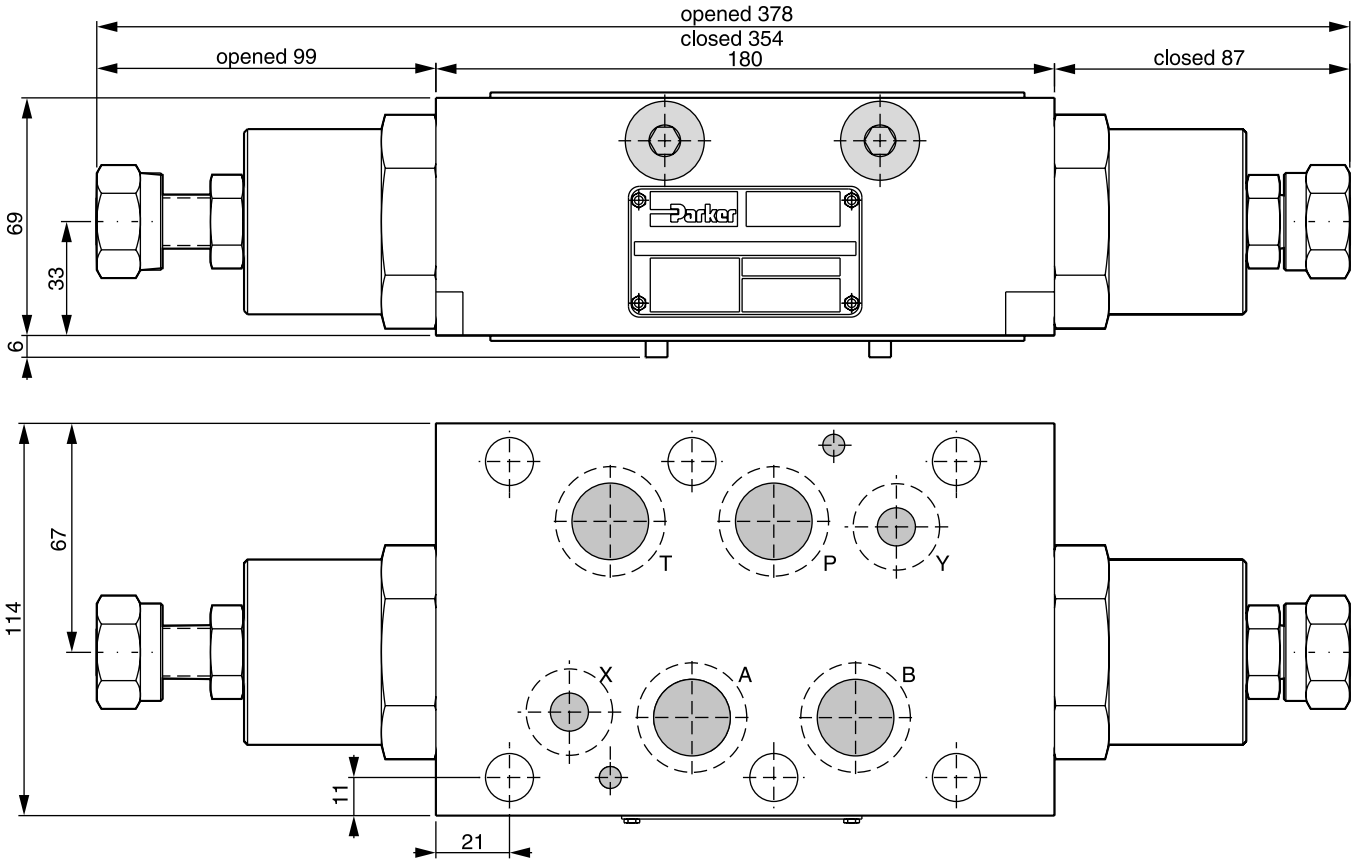

Meter-out

Adjustment: knob

Meter-in is not available for FM6

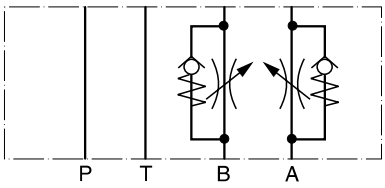

Seal kit FM6	
Seal	**Order code**
V	SK-FM6-V-12

Throttle check valves series ZRD are designed for maximum flow rates.

The throttle check function can be located in port A or B as well as in A + B. Meter-in or meter-out functionality can be selected by model code.

A low flow / high resolution version in NG06 for sensitive shifting time adjustment of pilot operated directional control valves is available on request.



ZRD-ABZ01

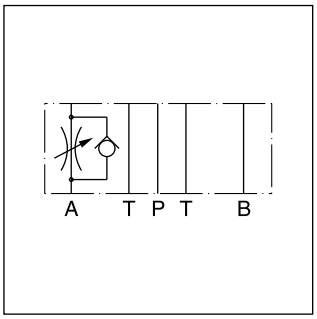

ZRD-AA02

Features

- High flow capacity
- Various functional arrangements
- ZRD01 - NG06 (CETOP 03)
  ZRD02 - NG10 (CETOP 05)

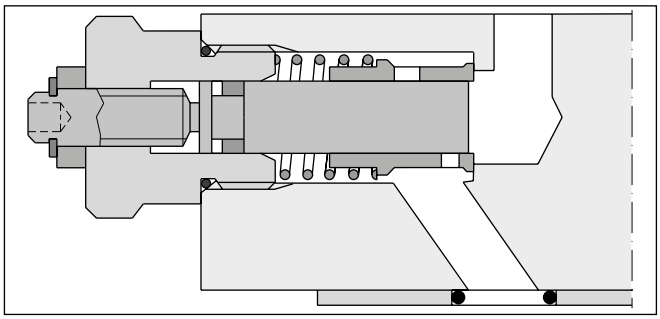

ZRD-AA02

7

Technical data

General				
Size			**NG06**	**NG10**
Mounting interface			DIN 24340 A6 ISO 4401 NFPA D03	DIN 24340 A10 ISO 4401 NFPA D05
			CETOP RP 121	
Mounting position			unrestricted	
Ambient temperature		[°C]	-20...+60	
$MTTF_D$ value		[years]	150	
Weight	1 cartridge	[kg]	1.2	2.8
	2 cartridges	[kg]	1.3	2.9
Hydraulic				
Max. operating pressure		[bar]	350	315
Nominal flow		[cSt] / [l/min]	80	160
Leakage		[cSt] / [l/min]	0.1...0.2 (at closed throttle)	0.1...0.2 (at closed throttle)
Opening pressure		[bar]	0.7	0.7
Fluid			Hydraulic oil according to DIN 51524	
Fluid temperature		[°C]	-20...+70 (NBR: -25...+70)	
Viscosity,	permitted	[cSt] / [mm^2/s]	20 ... 400	
	recommended	[cSt] / [mm^2/s]	30 ... 80	
Filtration			ISO 4406 (1999); 18/16/13	

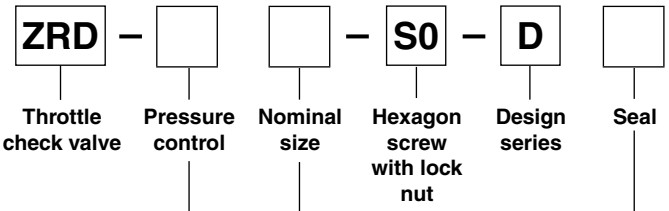

Code	Pressure control
AA	Meter-out control in A
AZ	Meter-in control in A
BA	Meter-out control in B
BZ	Meter-in control in B
ABA	Meter-out control in A and B
ABZ	Meter-in control in A and B

Code	Seal
1	NBR
5	FPM

Code	Nominal size
01	NG06
02	NG10

Ordering code details

ZRD*01

Meter-in control in A

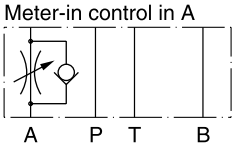

Series ZRD-AZ01-S0-D1 Order No. 098-91056-0

Meter-out control in B

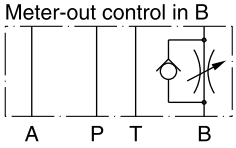

Series ZRD-BA01-S0-D1 Order No. 098-91013-0

Meter-in control in B

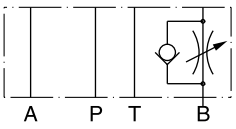

Series ZRD-BZ01-S0-D1 Order No. 098-91057-0

Meter-in control in A and B

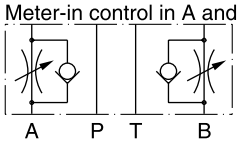

Series ZRD-ABZ01-S0-D1 Order No. 098-91058-0

Meter-out control in A

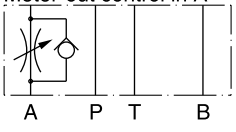

Series ZRD-AA01-S0-D1 Order No. 098-91012-0

Meter-out control in A and B

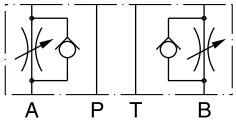

Series ZRD-ABA01-S0-D1 Order No. 098-91014-0

ZRD*02

Meter-in control in A

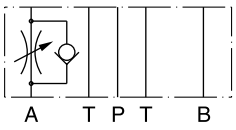

Series ZRD-AZ02-S0-D1 Order No. 098-91059-0

Meter-out control in B

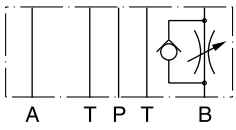

Series ZRD-BA02-S0-D1 Order no. 098-91016-0

Meter-in control in B

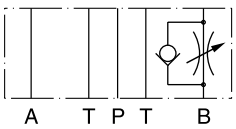

Series ZRD-BZ02-S0-D1 Order No. 098-91060-0

Meter-in control in A and B

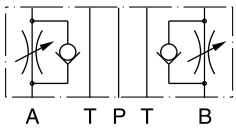

Series ZRD-ABZ02-S0-D1 Order no. 098-91061-0

Meter-out control in A

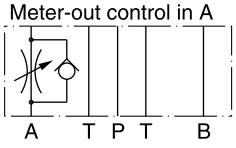

Series ZRD-AA02-S0-D1 Order no. 098-91015-0

Meter-out control in A and B

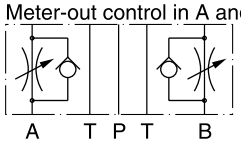

Series ZRD-ABA02-S0-D1 Order no. 098-91017-0

7

p/Q performance curves

ZRD*01

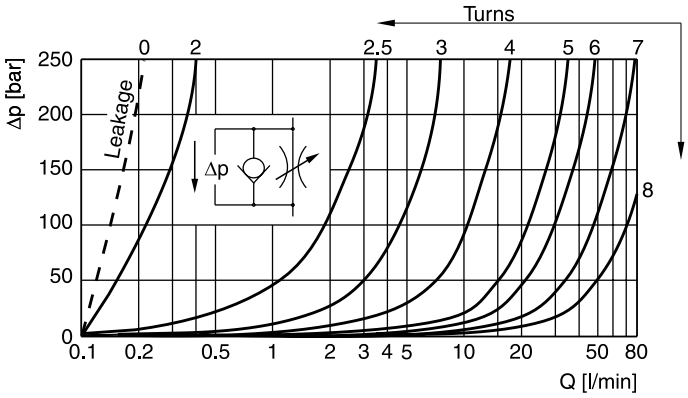

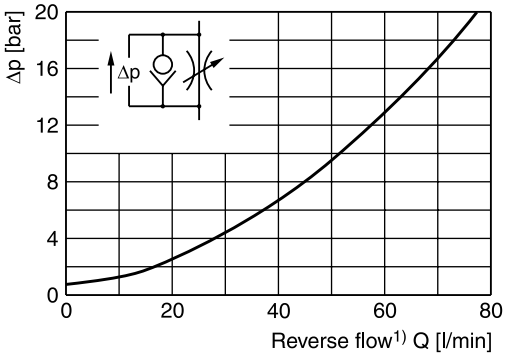

ZRD*02

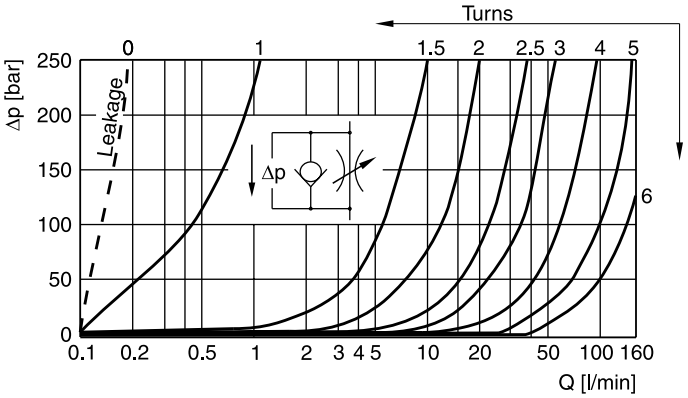

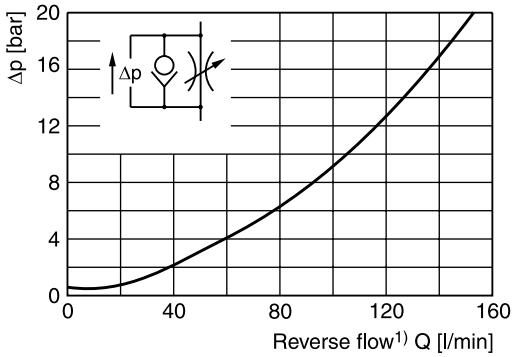

7

[1] Throttle closed.

All characteristic curves measured with HLP46 at 50 °C.

ZRD*01

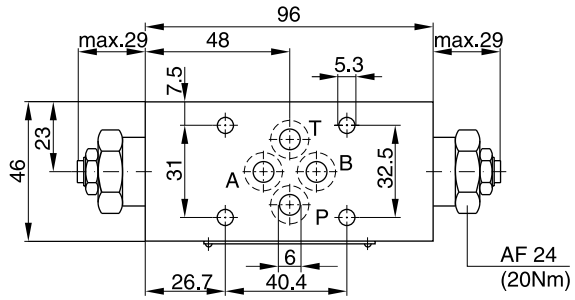

Seal kit	
Seal	**Order code**
1	098-91096-0
5	098-91097-0
Complete cartridge	
Order code 098-91119-0	
O-ring plate	**Order code**
1	SK-CM2-10
5	SK-CM2-V-10

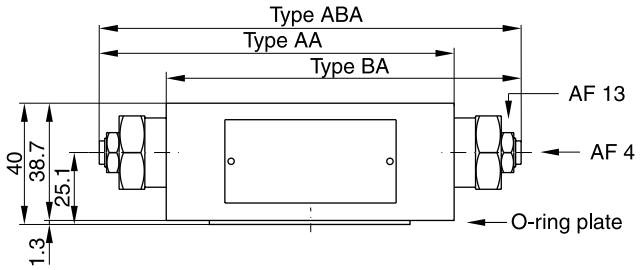

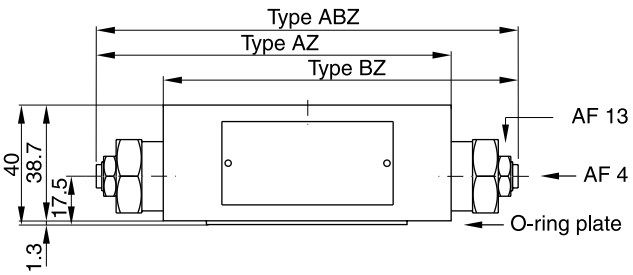

ZRD*02

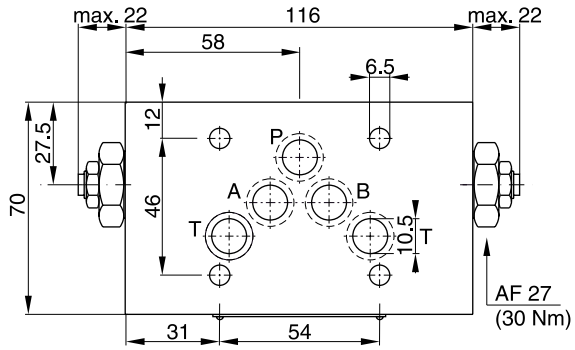

Seal kit	
Seal	**Order code**
1	098-91098-0
5	098-91099-0
Complete cartridge	
Order code 098-91120-0	
O-ring plate	**Order code**
1	SK-CM3-10
5	SK-CM3-V-10

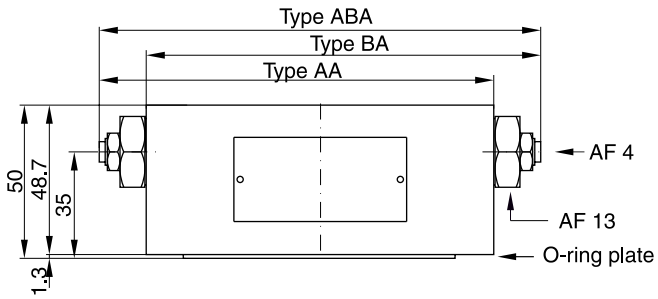

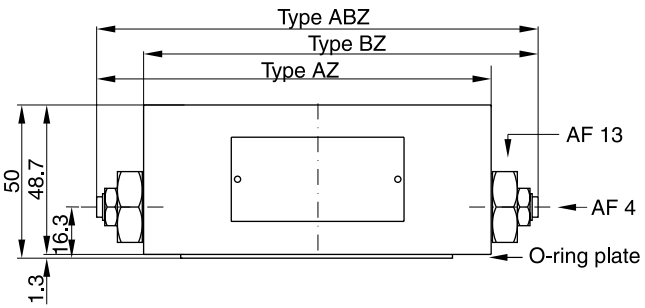

Check valves from the Parker Manapak series CM are in sandwich design for easy configuration of stack systems. Depending on the function required, one or two check valves are arranged in ports P, T, A, and B. Number and flow direction can be selected from the ordering code.



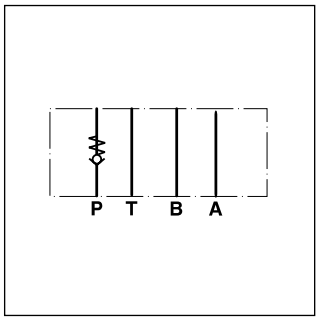

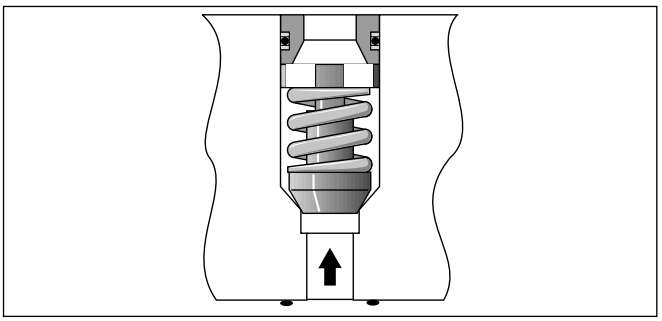

Features

- The valve bodies of the Parker Manapak valve series CM are made of steel.
- Eight options for the arrangement of the check valve in the body offer a multitude of uses for hydraulic switching.
- The function can be changed by turning the valve.
- CM2 - NG06 (CETOP 03)
  CM3 - NG10 (CETOP 05)

Ordering code

7

CM			V	
Check valve	**Nominal size**	**Port**	**Seal FPM**	**Design series** (not required for ordering)

Code	Nominal size
2	**Intermediate plate DIN NG06**
3	**Intermediate plate DIN NG10**

Code	Free flow polarity	Check valve in channel
AA	**From directional valve to manifold**	**A**
BB	**From directional valve to manifold**	**B**
DD	**From directional valve to manifold**	**A and B**
PP	**From manifold to directional valve**	**P**
TT	**From directional valve to manifold**	**T**
AAF	From manifold to directional valve	A
BBF	From manifold to directional valve	B
DDF	From manifold to directional valve	A and B

Bold letters =
Short-term availability

Technical data

General			
Series		**CM2**	**CM3**
Size		**NG06**	**NG10**
Mounting interface		DIN 24340 A6 ISO 4401 NFPA D03	DIN 24340 A10 ISO 4401 NFPA D05
Mounting position		unrestricted	
Ambient temperature	[°C]	-20...+60	
$MTTF_D$ value	[years]	150	
Weight	[kg]	0.9	1.7
Hydraulic			
Max. operating pressure	[bar]	350	350
Max. flow	[l/min]	53	76
Opening pressure	[bar]	0.3	0.3
Fluid		Hydraulic oil according to DIN 51524	
Fluid temperature	[°C]	-20...+70	
Viscosity , permitted	[cSt] / [mm²/s]	20...400	
recommended	[cSt] / [mm²/s]	30...80	
Filtration		ISO 4406 (1999); 18/16/13	

Schematics

The valve side is shown at the top of the symbols, the manifold side with channel designation is shown at the bottom.

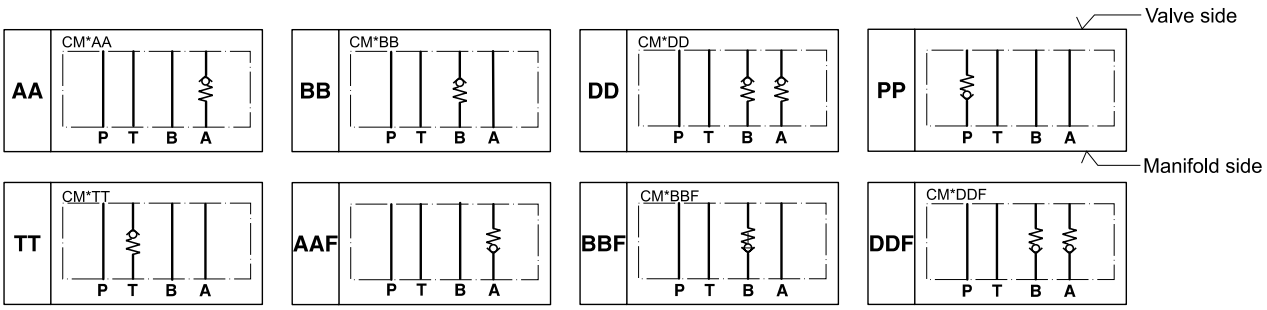

Δp/Q performance curves

CM2

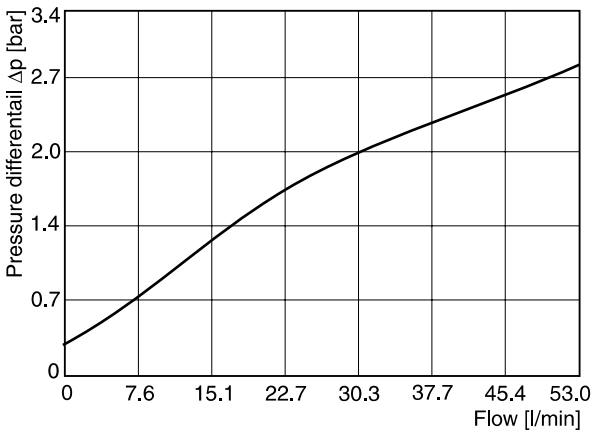

CM3

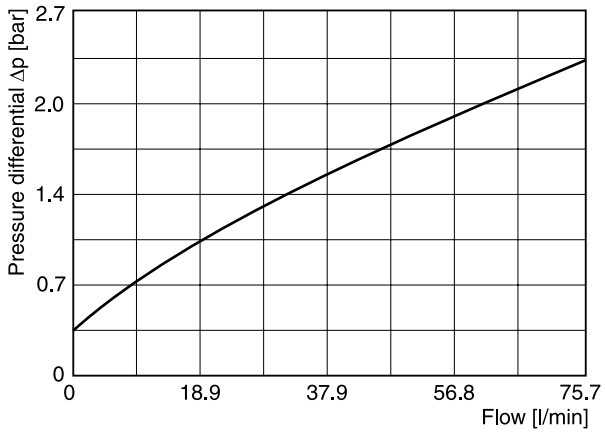

All characteristic curves measured with HLP46 at 50 °C.

CM2

Bottom view[1)]

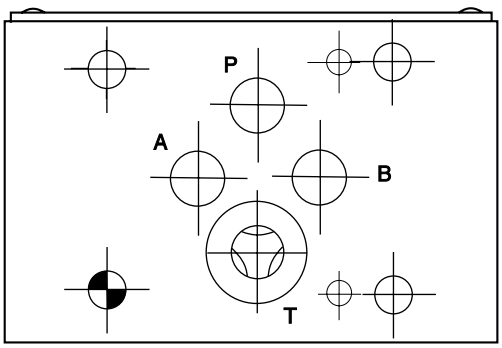

Front side

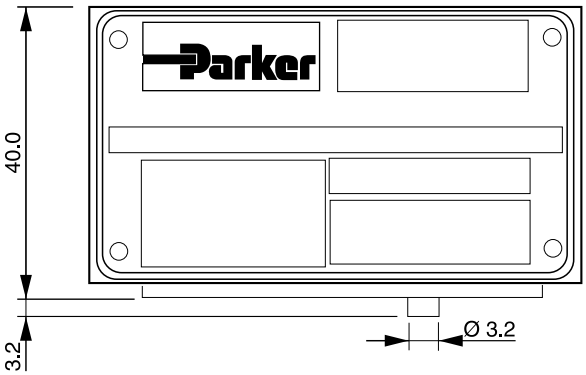

Top view

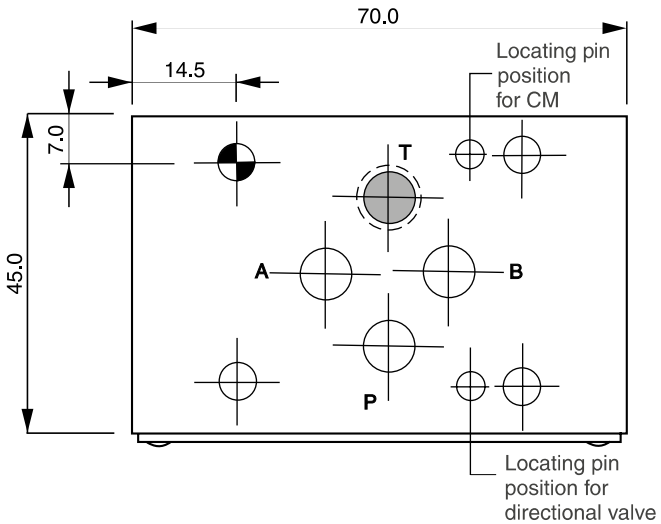

Seal kit CM2	
Seal	**Order code**
V	SK-CM2-V

Note:

The O-ring plate for sealing the connecting surface of the manifold side is included. The O-ring plate and the positioning pin are always mounted on the manifold side.

[1)] O-Ring plate is not shown! This view shows the TT model.

CM2 top views (from directional valve side)

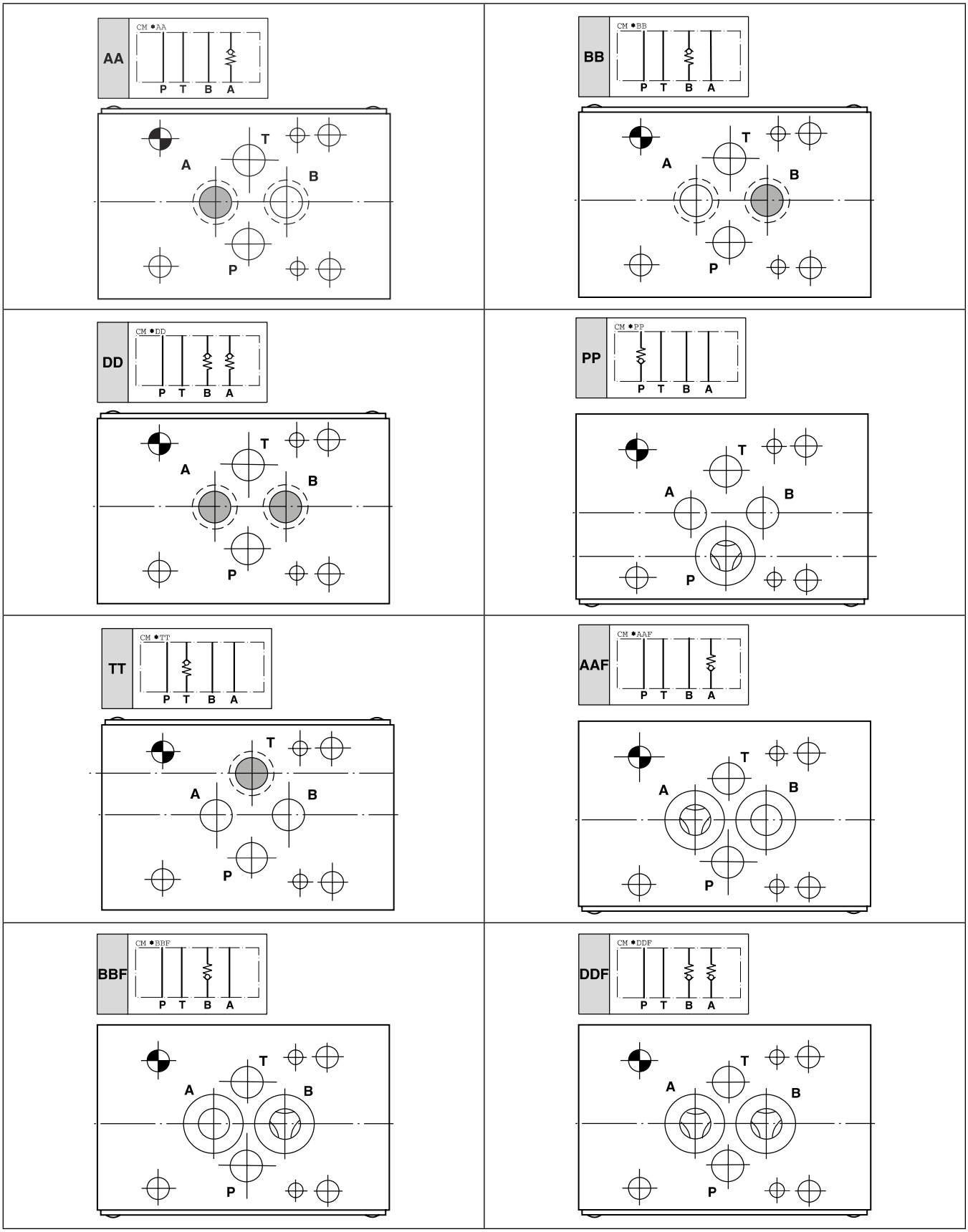

7

CM3

Bottom view[1)]

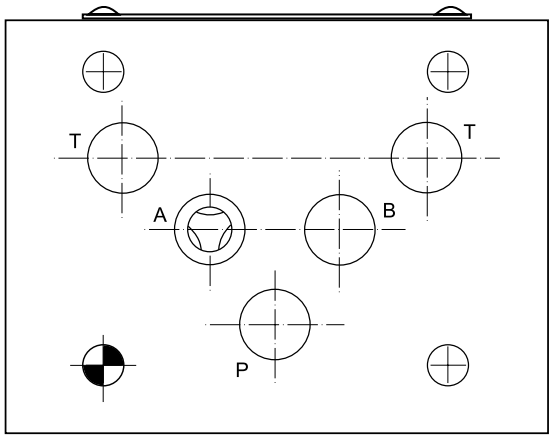

Front side

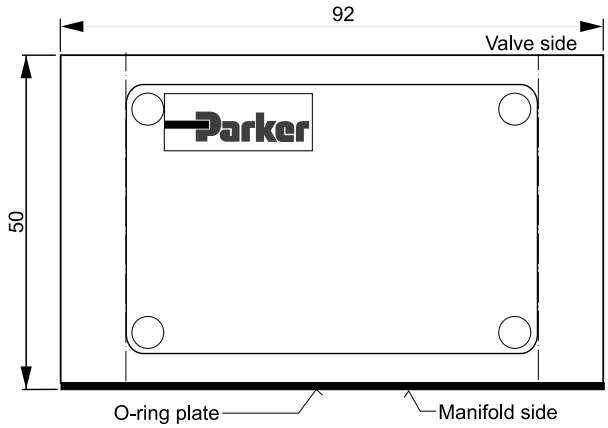

Top view

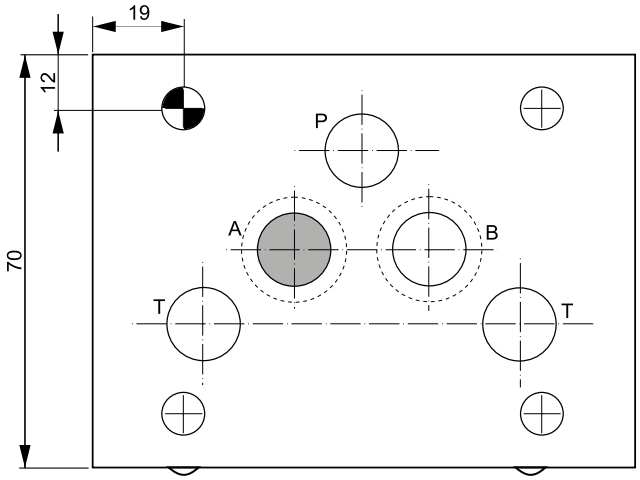

Seal kit CM3	
Seal	**Order code**
V	SK-CM3-V

Note:

The O-ring plate for sealing the connecting surface of the manifold side is included. The O-ring plate and the positioning pin are always mounted on the manifold side.

[1)] O-ring plate is not shown! This view shows the AA model.

CM3 top views (from directional valve side)

AA

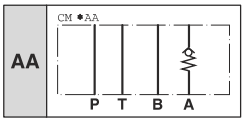

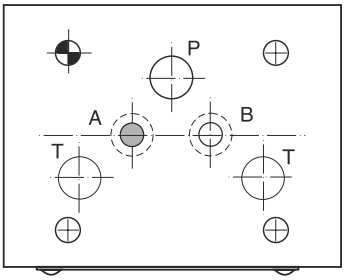

BB

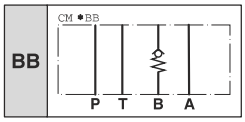

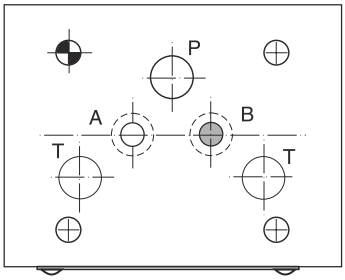

DD

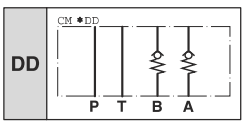

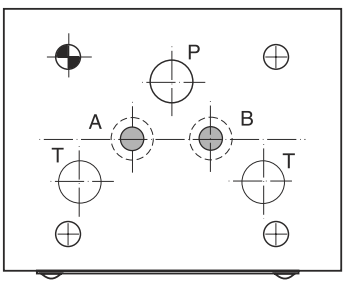

PP

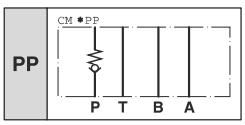

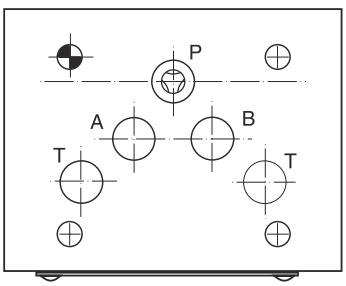

TT

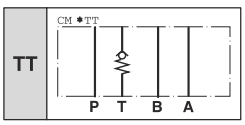

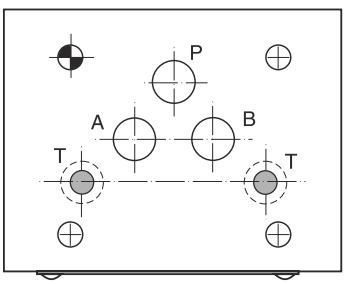

AAF

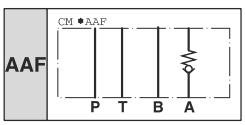

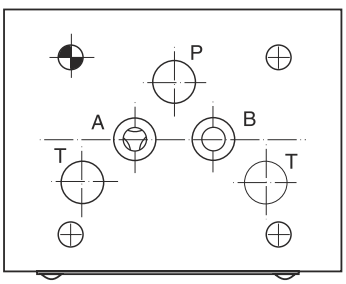

BBF

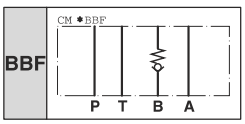

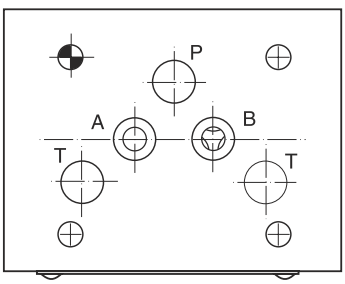

DDF

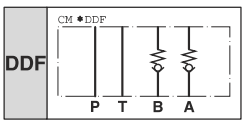

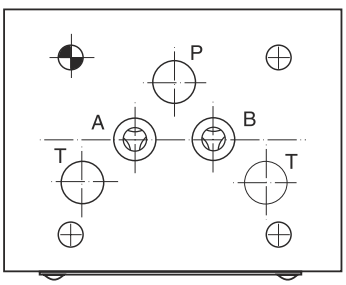

7

Direct operated check valves series ZRV have a cartridge type insert to provide zero leakage and high life time.

The check function can be located in the P- or in the T-port.

Features

- Leakage-free seat
- High life time
- Opening pressure 0.5 bar
- ZRV01 - NG06 (CETOP 03)
  ZRV02 - NG10 (CETOP 05)



ZRV-P02

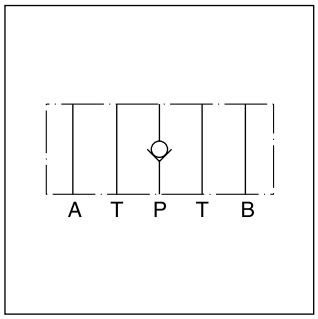

ZRV-P02

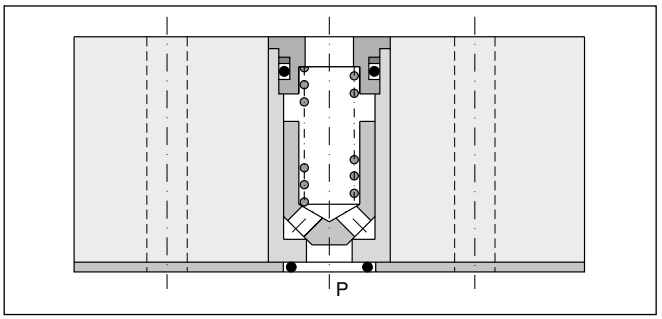

ZRV-P02

Ordering code

ZRV – ☐ ☐

Check valve, direct operated | **Pressure control** | **Nominal size**

Code	Pressure control
P	Blocked in P
T	Blocked in T

Code	Nominal size
01	NG06
02	NG10

Ordering code details

ZRV01

blocked in P

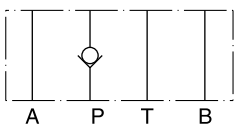

Series ZRV-P01

Order No. 098-90025-0

blocked in T

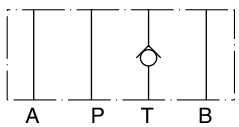

Series ZRV-T01

Order No. 098-90026-0

ZRV02

blocked in P

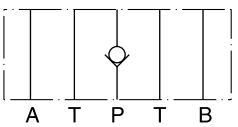

Series ZRV-P02

Order No. 098-90043-0

blocked in T

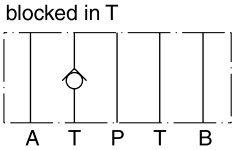

Series ZRV-T02

Order No. 098-90044-0

Technical data

General			
Size		**NG06**	**NG10**
Mounting interface		DIN 24340 A6 ISO 4401 NFPA D03	DIN 24340 A10 ISO 4401 NFPA D05
		CETOP RP 121	
Mounting position		unrestricted	
Ambient temperature	[°C]	-20...+60	
$MTTF_D$ value	[years]	150	
Weight	[kg]	0.7	2.0
Hydraulic			
Max. operating pressure	[bar]	350	315
Nominal flow	[l/min]	40	100
Opening pressure	[bar]	0.5	0.5
Fluid		Hydraulic oil according to DIN 51524	
Fluid temperature	[°C]	-20...+70 (NBR: -25...+70)	
Viscosity permitted	[cSt] / [mm^2/s]	20 ... 400	
recommended	[cSt] / [mm^2/s]	30 ... 80	
Filtration		ISO 4406 (1999); 18/16/13	

p/Q performance curves

ZRV*01

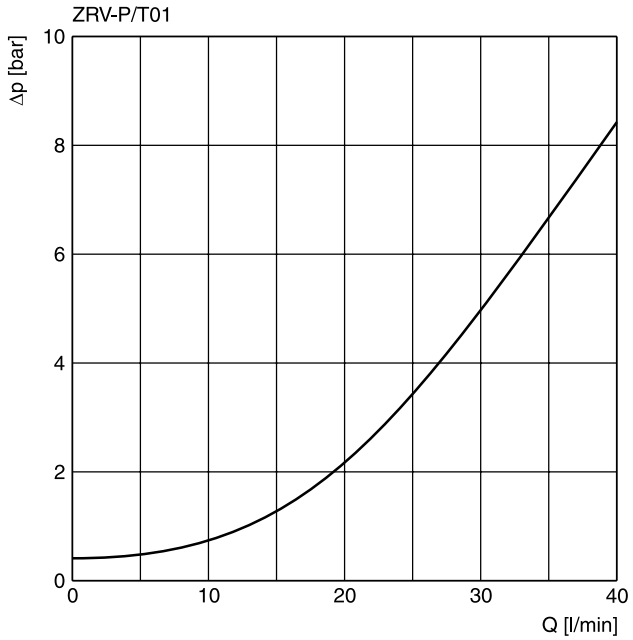

ZRV*02

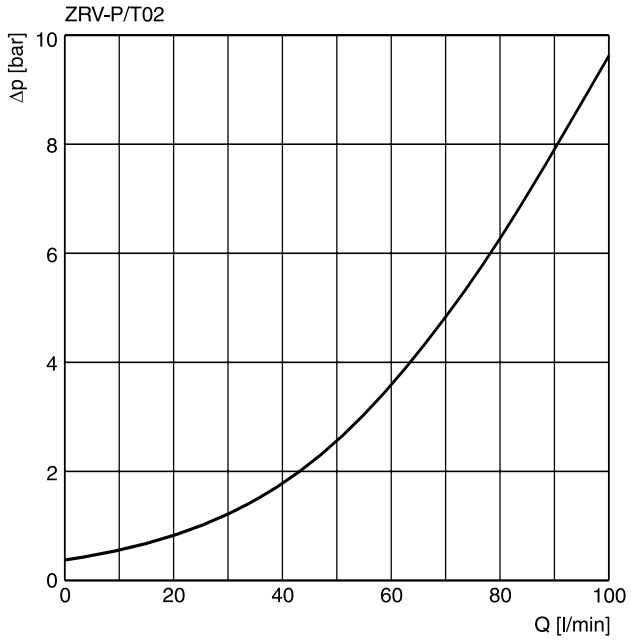

All characteristic curves measured with HLP46 at 50 °C.

ZRV01

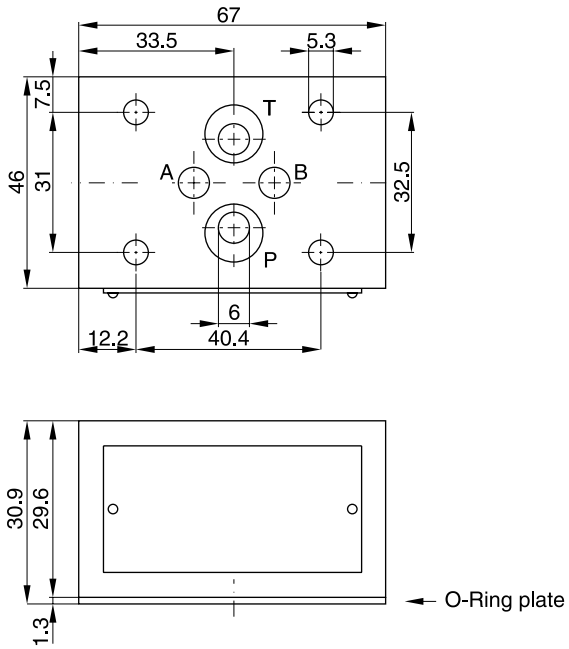

Seal kit	
Seal	**Order code**
NBR	SK-CM2-10
FPM	SK-CM2-V-10

ZRV02

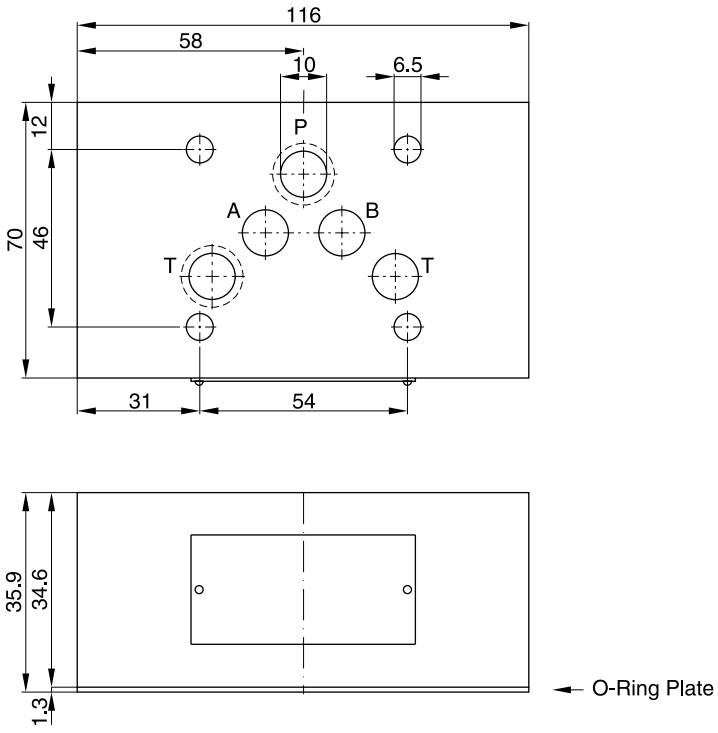

Seal kit	
Seal	**Order code**
NBR	SK-CM3-10
FPM	SK-CM3-V-50

Pilot operated check valves from the Parker Manapak series CPOM are in sandwich design for easy configuration of stack systems. Depending on the function required, one or two pilot operated check valves are arranged in the ports A and/or B. The free flow direction is always from the valve side to the manifold side.



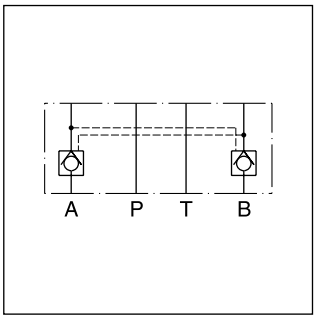

CPOM3

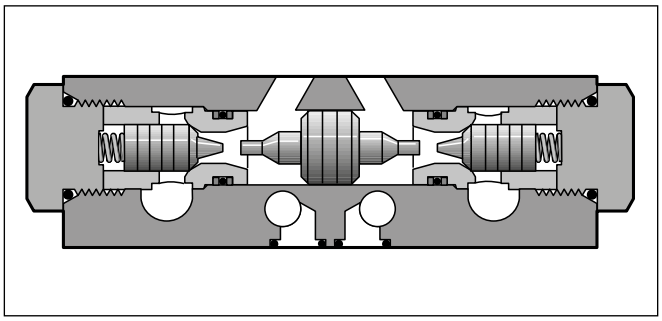

Function

The check valves open when flowing to the consumer side, where the opposing check valve is hydraulically-mechanically pilot operated simultaneously by a control spool, and thus the return flow is enabled from other consumer sides.

Features

- The valve bodies of the Parker Manapak valve series CPOM are made of steel.
- The valve poppet is precisely guided into the steel sleeve and ensures a good seal on the seat.
- When the valve poppet is open, the large cross-section allows high flow rates at low differential pressure.
- Different control ratios can be chosen with the NG06 and NG10 valves.
- Pre-opening for CPOM*HT to achieve smooth opening.

Ordering code

Without pre-opening

CPOM				V	
Hydraulically operated check valve pilot ratio 3 : 1	**Size**	**Poppet style**	**Opening pressure**	**Seal FPM**	**Design series** (not required for ordering)

Code	Size
2	**NG06**
3	**NG10**
6	NG25

Code	Pressure	Size
omit	**1.0 bar**	**NG06/10/25**
25	2.5 bar	NG06
50	5.0 bar	NG06
70	7.0 bar	NG06

Code	Connection
AA	**only A**
BB	**only B**
DD	**A and B**

With pre-opening

CPOM	4		HT	V	
Hydraulically operated check valve	**Size NG16**	**Poppet style**	**Pilot ratio 13:1**	**Seal FPM**	**Design series** (not required for ordering)

Code	Connection
AA	**only A**
BB	**only B**
DD	**A and B**

Bold letters =
Short-term availability

Technical data

General					
Series		**CPOM2**	**CPOM3**	**CPOM4**	**CPOM6**
Nominal size		**NG06**	**NG10**	**NG16**	**NG25**
Mounting interface		ISO 4401			
Ambient temperature	[°C]	-20...+60			
$MTTF_D$ value	[years]	150			
Weight	[kg]	1.8	4.0	7.65	9.5
Hydraulic					
Max. operating pressure	[bar]	350	350	350	210
Opening pressure	[bar]	1.0	0.8	2.0	0.4
Opening ratio		1 : 3	1 : 3	1 : 13	1 : 3
Fluid		Hydraulic oil according to DIN 51524			
Fluid temperature	[°C]	-20...+70			
Viscosity, permitted	[cSt] / [mm²/s]	20...400			
recommended	[cSt] / [mm²/s]	30...80			
Filtration		ISO 4406 (1999); 18/16/13			

Schematics CPOM2 / CPOM3

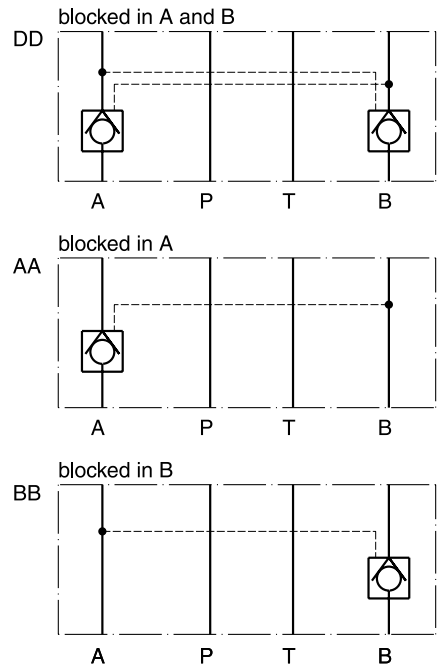

CPOM4 / CPOM6

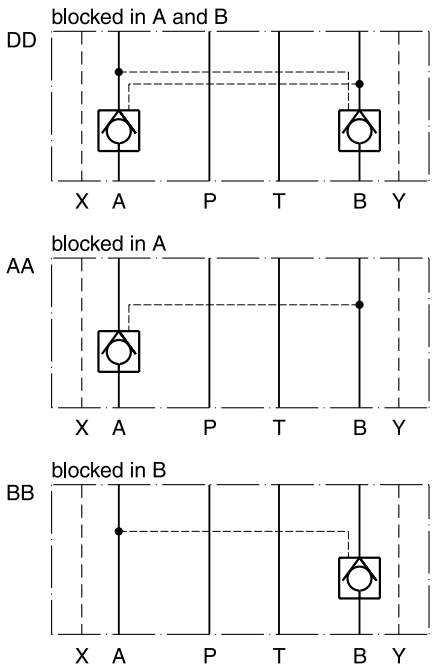

Δp/Q performance curves

CPOM2

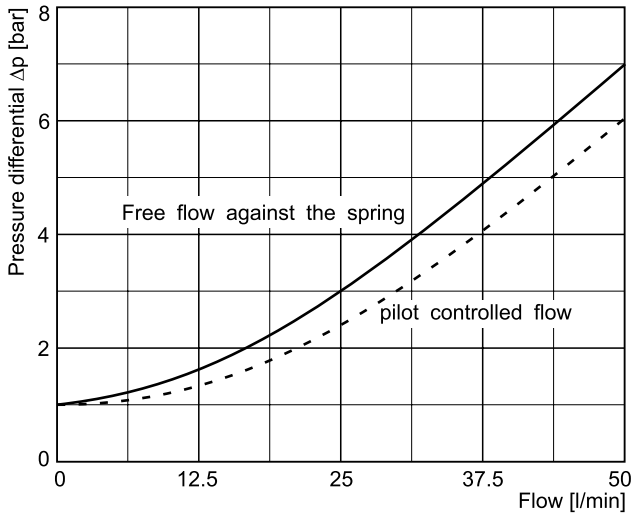

CPOM3

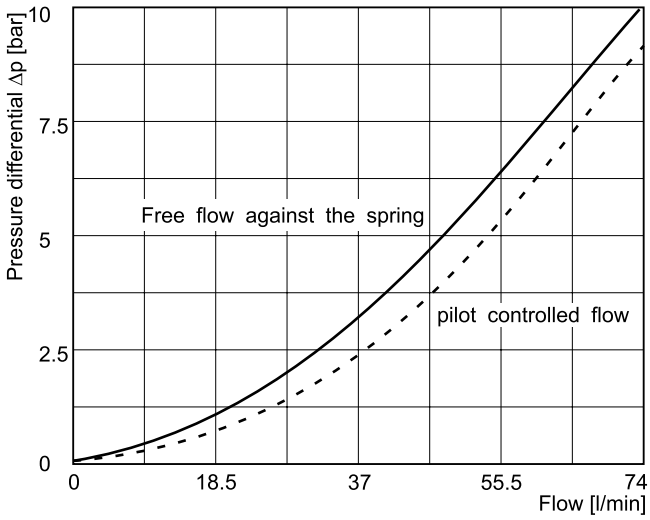

CPOM4 (type HT)

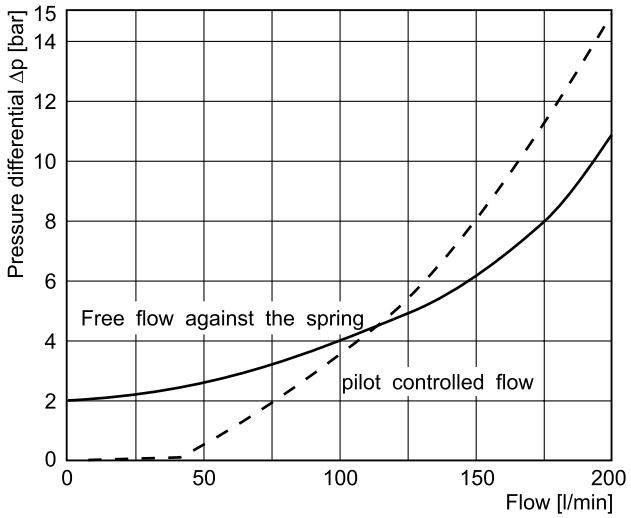

CPOM6

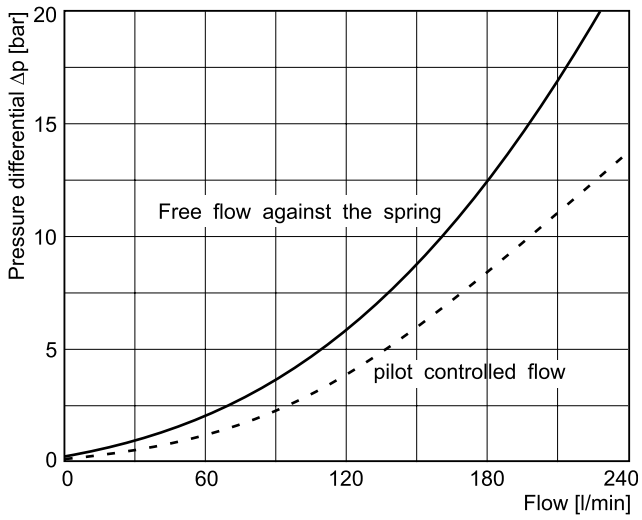

7

All characteristic curves measured with HLP46 at 50 °C.

CPOM2

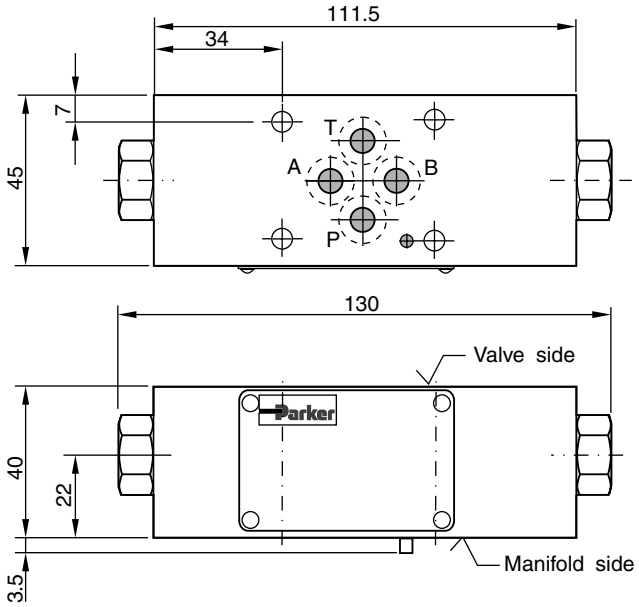

Seal kit CPOM2	
Seal	**Order code**
V	SK-CPOM2-V-11

CPOM3

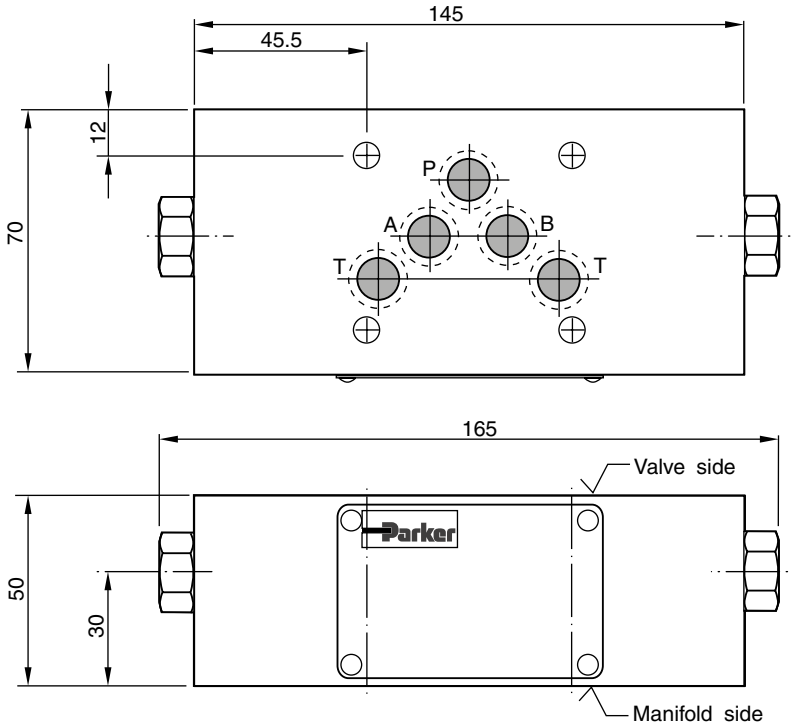

Seal kit CPOM3	
Seal	**Order code**
V	SK-CPOM3-V-11

Note:

The O-ring plate for sealing the connecting surface of the manifold side is included. The O-ring plate and the positioning pin are always mounted on the manifold side.

CPOM4

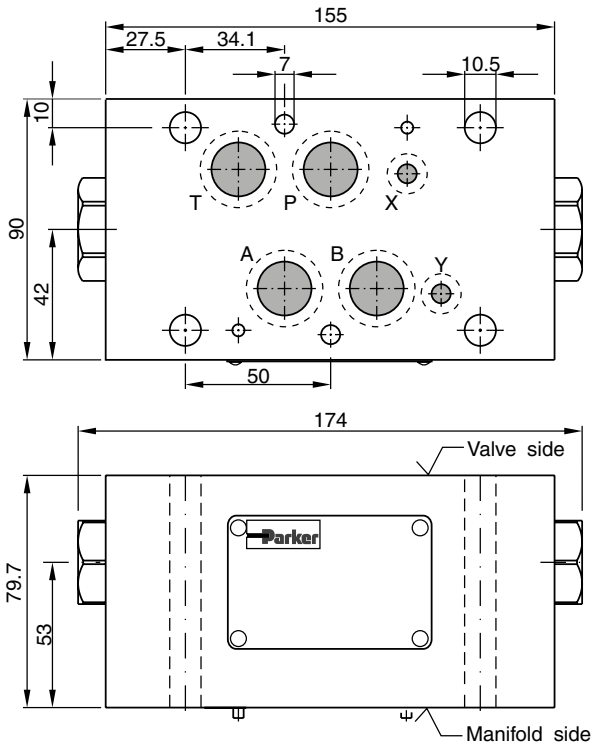

Seal kit CPOM4	
Seal	**Order code**
V	SK-CPOM4HTV

CPOM6

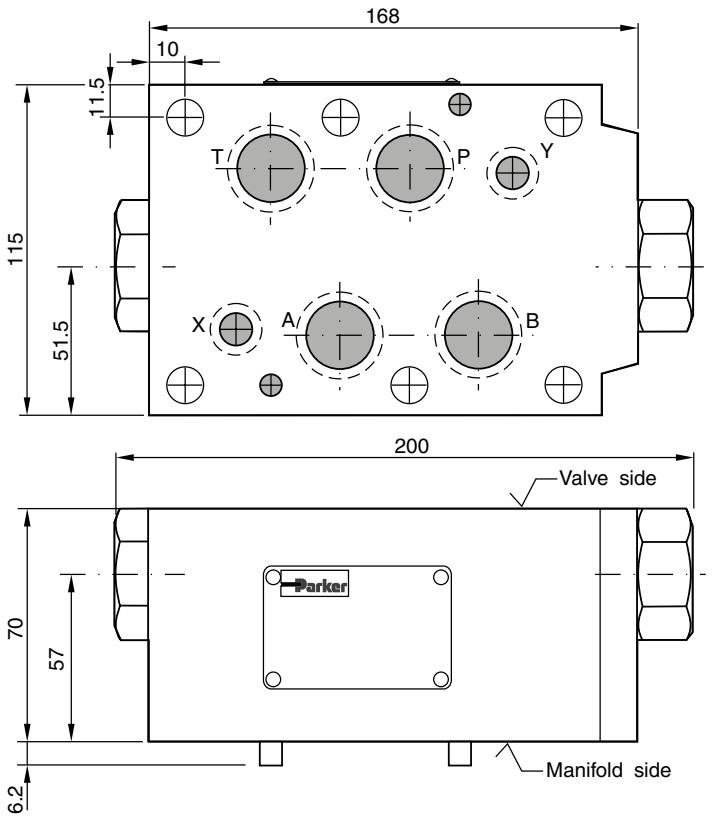

Seal kit CPOM6	
Seal	**Order code**
V	SK-CPOM6-V-20

Note:

The O-ring plate for sealing the connecting surface of the manifold side is included. The O-ring plate and the positioning pin are always mounted on the manifold side.

Pilot operated check valves series ZRE are designed for maximum flow rates and long life time.

The valves are typically used in combination with spool type directional control valves to ensure nearly leak free positioning of the actuator.

The inlet flow is free while the outlet flow is blocked. Pressure in the inlet line opens the check valve and allows free outlet flow.



ZRE-B01

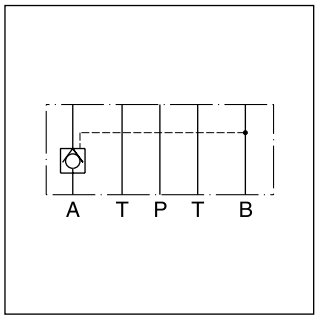

ZRE-A02

Features

- High flow capacity
- High life time
- Check function in A, B or A + B
- ZRE01 - NG06 (CETOP 03)
  ZRE02 - NG10 (CETOP 05)

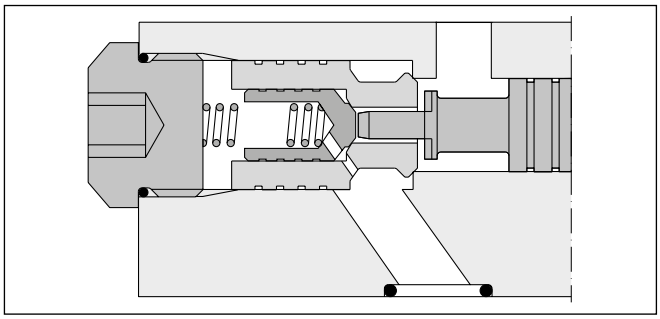

ZRE-A02

Ordering code

ZRE – □ □ – □ □

Check valve pilot operated | **Pressure control** | **Nominal size** | **Design series** | **Seal**

Code	Pressure control
A	Blocked in A
B	Blocked in B
AB	Blocked in A and B

Code	Nominal size
01	NG06
02	NG10

Code	Seal
1	NBR
5	FPM

Code	Design series
D	NG06
E	NG10

Ordering code details

ZRE*01

blocked in A and B

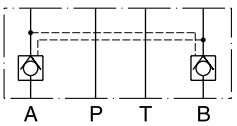

Series ZRE-AB01-D1 — Order No. 098-91020-0

blocked in A

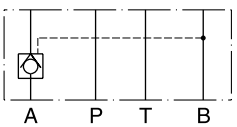

Series ZRE-A01-D1 — Order No. 098-91018-0

blocked in B

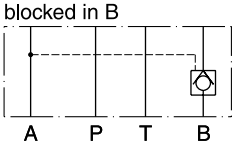

Series ZRE-B01-D1 — Order No. 098-91019-0

ZRE*02

blocked in A and B

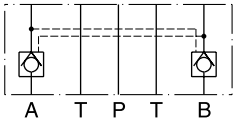

Series ZRE-AB02-E1 — Order No. 098-91300-0

blocked in A

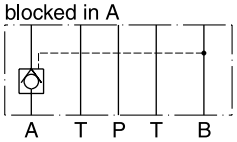

Series ZRE-A02-E1 — Order No. 098-91298-0

blocked in B

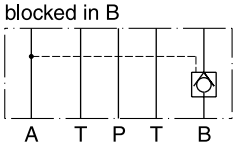

Series ZRE-B02-E1 — Order No. 098-91304-0

Technical data

General				
Size			**NG06**	**NG10**
Mounting interface			DIN 24340 A6 ISO 4401 NFPA D03	DIN 24340 A10 ISO 4401 NFPA D05
			CETOP RP 121	
Mounting position			unrestricted	
Ambient temperature		[°C]	-20...+60	
$MTTF_D$ value		[years]	150	
Weight		[kg]	1.2	3.1
Hydraulic				
Max. operating pressure		[bar]	up to 350	315
Nominal flow		[l/min]	60	120
Opening ratio (pilot cone / main cone)			1:6	1:6
Opening pressure		[bar]	1.2	2.0
Leakage			on request	
Fluid			Hydraulic oil according to DIN 51524	
Fluid temperature		[°C]	-20...+70 (NBR: -25...+70)	
Viscosity	permitted	[cSt] / [mm^2/s]	20 ... 400	
	recommended	[cSt] / [mm^2/s]	30 ... 80	
Filtration			ISO 4406 (1999); 18/16/13	

p/Q performance curves

ZRE*01

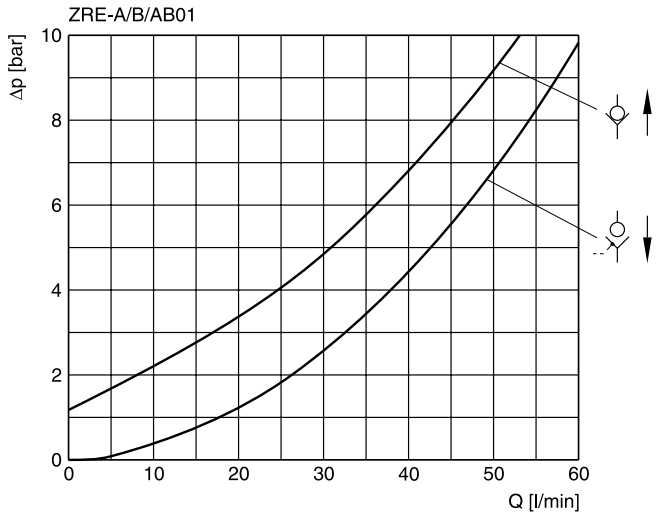

ZRE*02

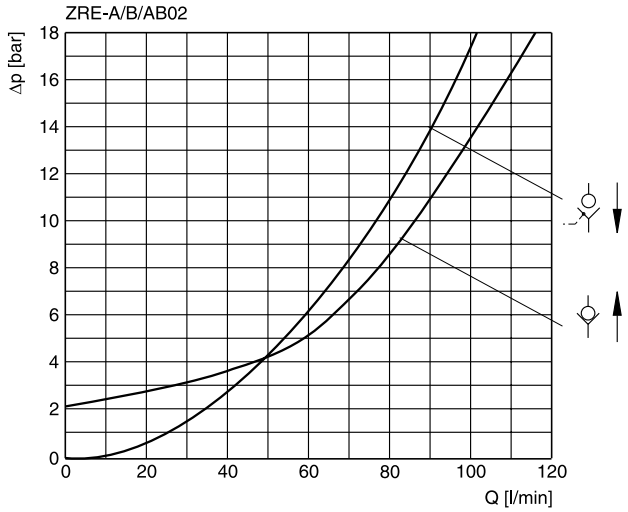

All characteristic curves measured with HLP46 at 50 °C.

7

Dimensions

ZRE*01

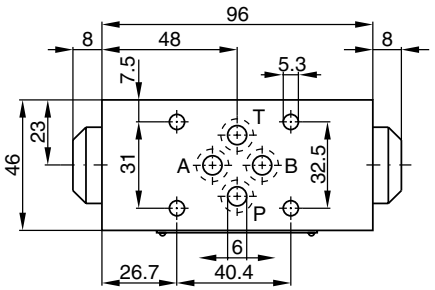

Seal kit	
Seal	**Order code**
1	098-91088-0
5	098-91089-0

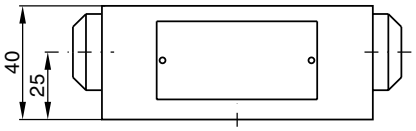

ZRE*02

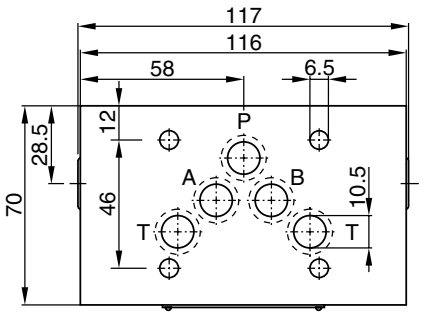

Seal kit	
Seal	**Order code**
1	098-91090-0
5	098-91091-0

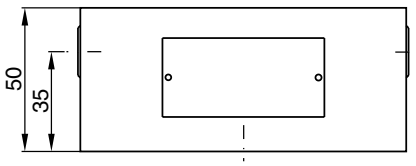

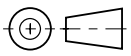

The counterbalance valve series ZNS controls the actuator movement at overrunning loads.

The return flow from the actuator is piloted and controlled by the inlet flow to the actuator, ensuring a cavitation-free lowering of the load.

The counter balance valve operates as a pressure relief valve. The setting pressure is lowered by the pressure in the inlet line. To ensure safe load holding the setting pressure should be approximately 30 % higher than the max. load pressure.



ZNS-AB01

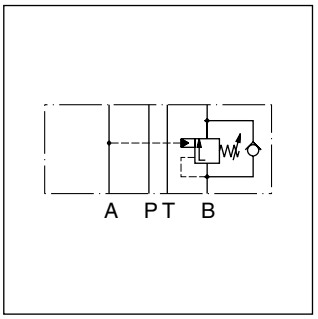

ZNS-B01

Features

- Controlled movement loads
- Load holding via leak-free poppet valve
- Secondary relief protection for the actuator
- ZNS*01 – NG06 (CETOP 03)
  ZNS*02 – NG10 (CETOP 05)

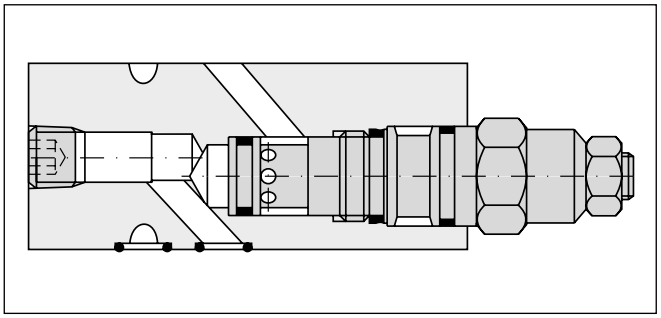

ZNS-B01

Ordering code

ZNS				S0	D	
Counterbalance valve	Pressure control	Nominal size	Pressure stages	Hexagon screw with lock nut	Design series	Seal

Code	Pressure control
A	in A
B	in B
AB	in A and B

Code	Nominal size
01	NG06
02	NG10

Code	Seal
1	NBR
5	FPM

Code	Pressure stages
2	70 - 175 bar
5 [1)]	140 - 350 bar

[1)] NG10 to 315 bar.

Ordering code details

Counterbalance in A

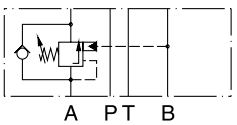

ZNS*01		ZNS*02	
Series	Order no.	Series	Order no.
ZNS-A01-2-S0-D1	098-91126-0	ZNS-A02-2-S0-D1	098-91132-0
ZNS-A01-5-S0-D1	098-91127-0	ZNS-A02-5-S0-D1	098-91133-0

Counterbalance in B

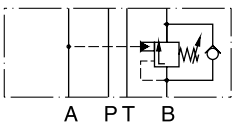

Series	Order no.	Series	Order no.
ZNS-B01-1-S0-D1	098-91128-0	ZNS-B01-1-S0-D1	098-91134-0
ZNS-B01-5-S0-D1	098-91129-0	ZNS-B01-5-S0-D1	098-91135-0

Counterbalance in A and B

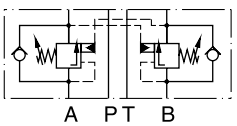

Series	Order no.	Series	Order no.
ZNS-AB01-1-S0-D1	098-91130-0	ZNS-AB02-1-S0-D1	098-91136-0
ZNS-AB01-5-S0-D1	098-91131-0	ZNS-AB02-5-S0-D1	098-91137-0
2 = 70 ... 175 bar		2 = 70 ... 175 bar	
5 = 140… 350 bar		5 = 140 …315 bar	

Technical data

General				
Size			**NG06**	**NG10**
Mounting interface			DIN 24340 A6 ISO 4401 NFPA D03	DIN 24340 A10 ISO 4401 NFPA D05
Mounting position			unrestricted	
Ambient temperature		[°C]	-20...+60	
Weight	1 cartridge	[kg]	1.3	1.6
	2 cartridges	[kg]	3.0	3.9
Hydraulic				
Max. operating pressure		[bar]	350	315
Pressure stages		[bar]	175, 350	
Pilot ratio			4.5 : 1	
Leakage			on request	
Nominal flow		[l/min]	60	120
Opening pressure		[bar]	0.3	0.3
Fluid			Hydraulic oil according to DIN 51524	
Fluid temperature		[°C]	-20...+70 (NBR: -25...+70)	
Viscosity,	permitted	[cSt] / [mm²/s]	20 ... 400	
	recommended	[cSt] / [mm²/s]	30 ... 80	
Filtration			ISO 4406 (1999); 18/16/13	

p/Q performance curves

ZNS*01

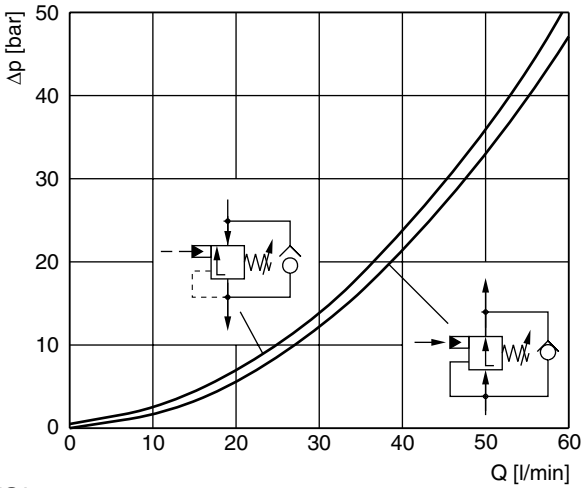

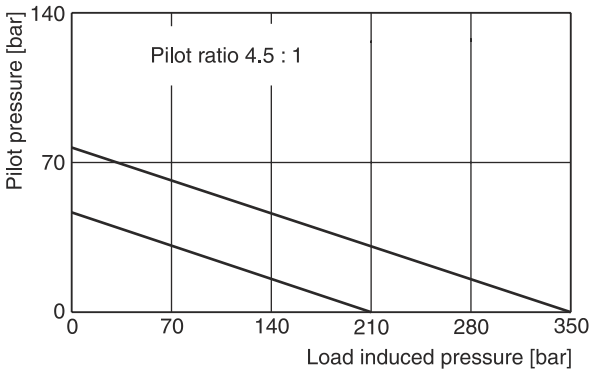

ZNS*02

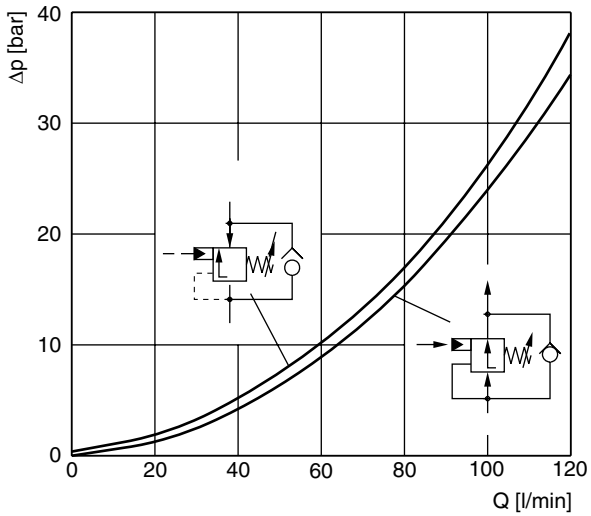

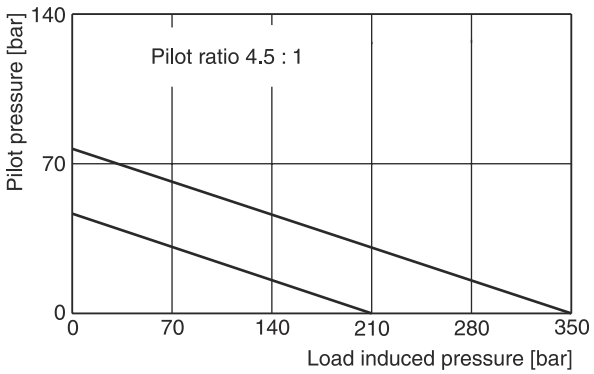

All characteristic curves measured with HLP46 at 50 °C.

ZNS*01

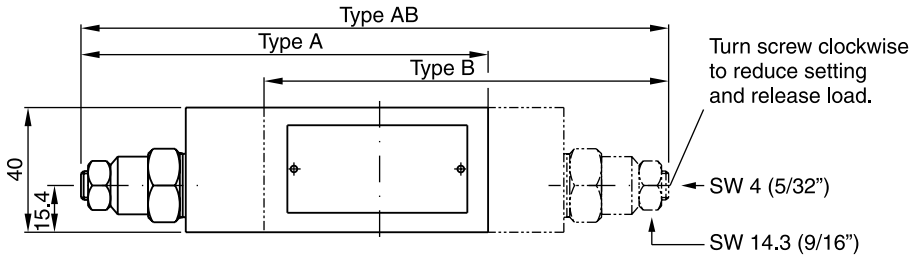

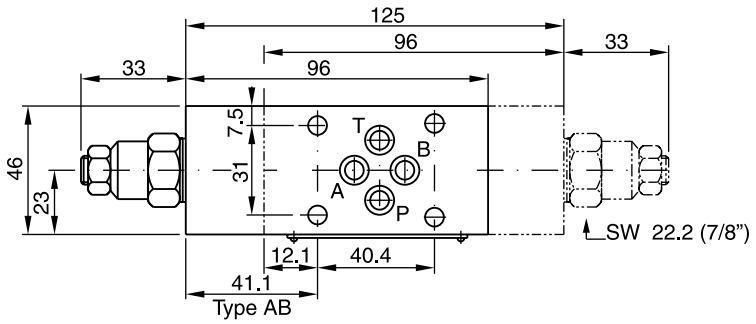

Seal kit ZNS*01	
Seal	**Order code**
NBR	098-91153-0
FPM	098-91154-0
Complete cartridge ZNS*01	
Pressure stage	**Order code**
2	517-01017-2
5	517-00448-8

ZNS*02

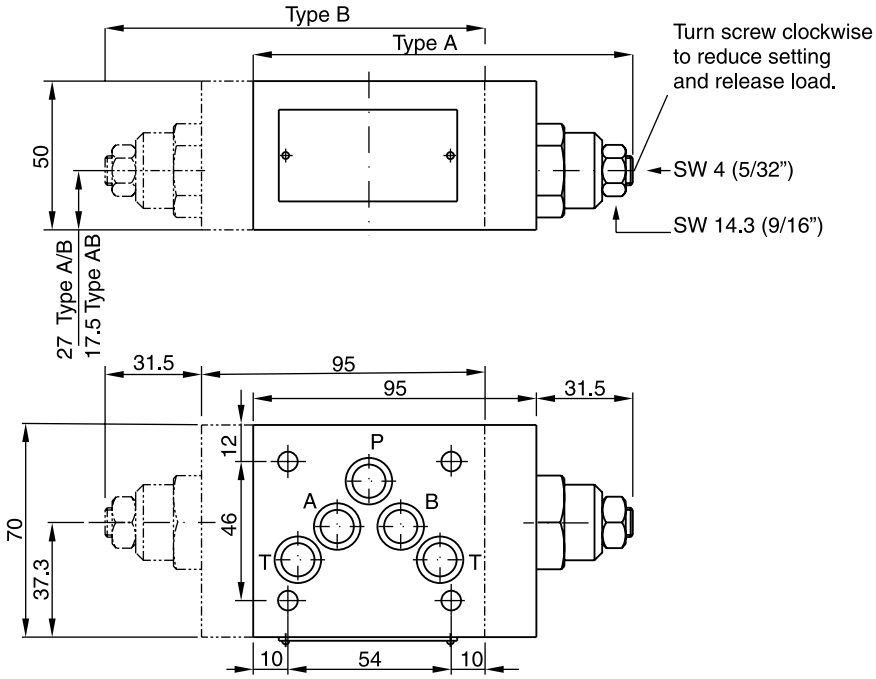

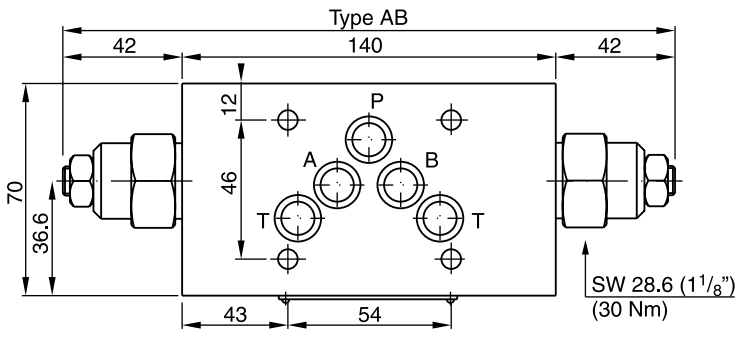

Seal kit ZNS*02	
Seal	**Order code**
NBR	098-91155-0
FPM	098-91156-0
Complete cartridge ZNS*02	
Pressure stage	**Order code**
2	517-00449-8
5	517-00450-8

NG06

Code: ISO 4401-03-02-0-94

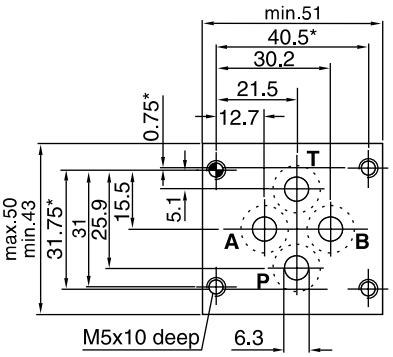

NG10

Code: ISO 4401-05-05-0-94

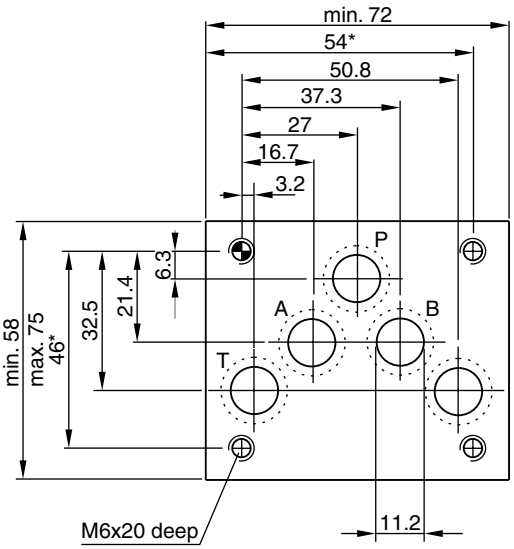

NG16

Code: ISO 4401-07-06-0-94

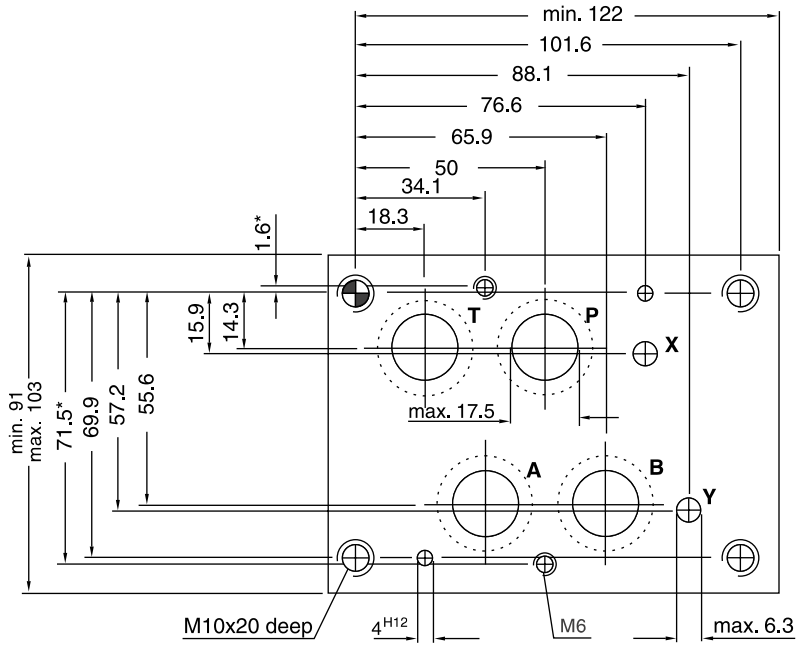

NG25

Code: ISO 4401-08-07-0-94 (Port diameter acc. to NFPA)

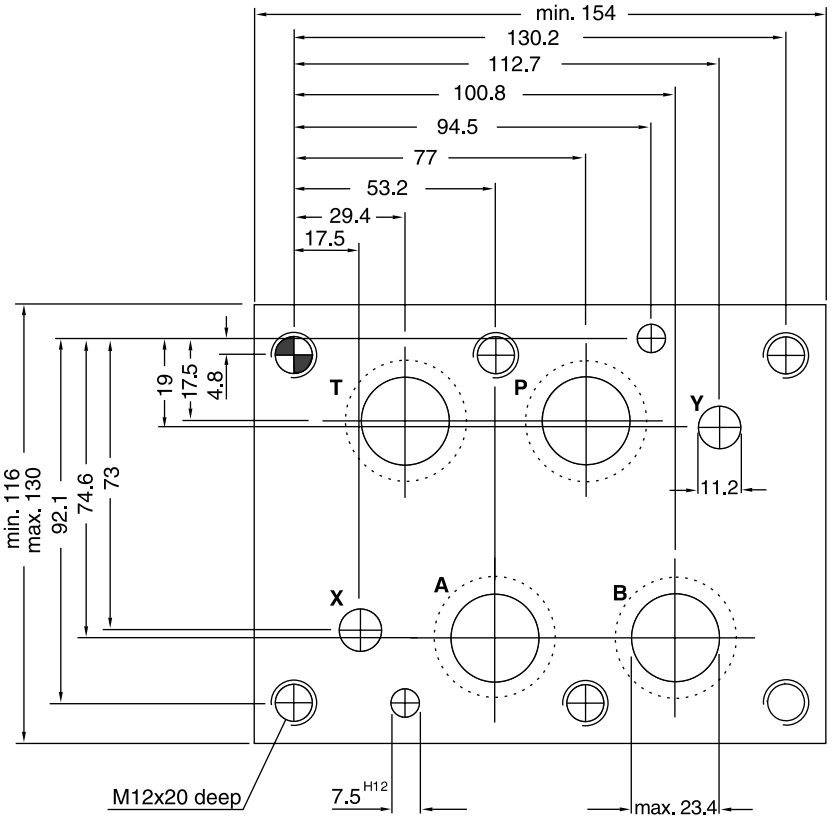

Dimensions marked with*: ± 0.1 mm.
All other dimensions: ± 0.2 mm.

Mounting

Parker sandwich valves can be installed as desired. Each has a mounting pattern, whose dimensions correspond to the following standards.

ISO 4401
DIN 24430
CETOP RP121
NFPA

Mounting screws

Cylinder head bolts as per ISO 4762-12.9, or studs as per DIN 835 10.9 with cylindrical nuts are used to mount the height stacking Manapak sandwich valves.

Bolt kits and tie rods see chapter 12, "Accessories".

Length of the mounting screws

The screw length is the sum of the engagement depth plus the stacking length. The stud length is the sum of the stacking length plus the thread depth of the nut.

Torques

The mounting screws or studs must be tightened with the prescribed tightening torque so that safety and proper seal are ensured.

See chapter 12 “Accessories“ for BK bolt kits and TK tie rod kits.

Threads length

Threads	M5	M6	M10	M12
thread length	1.5 x Ø thread			

Series	Description	Size									Page
	DIN / ISO	16	25	32	40	50	63	80	100	125	
	2-way slip-in cartridge valves										
	Introduction, hydraulic symbols, installation dimensions										8-2
CE / CP	2-way cartridge	•	•	•	•	•	•	•	•		8-4
C*A	Cover without auxilary function	•	•	•	•	•	•	•	•		8-8
C*B	Cover with stroke limiter	•	•	•	•	•	•	•	•		8-9
C*C	Cover for pilot system mounting	•	•	•	•	•	•	•	•		8-11
C*F	Cover for pressure relief function	•	•	•							8-14
C*G	Cover for pressure relief function plus pilot system mounting	•	•	•							8-15
C*H	Cover with stroke limiter and DC valve mounting	•	•	•	•	•	•	•	•		8-16
C*V	Cover with shuttle valve	•	•	•	•	•	•				8-19
C*W	Cover with shuttle valve plus pilot system mounting	•	•	•	•	•	•				8-20
	Accessories										
	Pilot valves										8-21
	Cover-, sandwich, adaptor plates										8-29
	Spare parts, seal kits										8-31
	Orifice diagram, orifice kits										8-32
	Extracting tools										8-33
	Complete valves and combination examples, pressure function										
R / RS*E	Pressure relief valves, manual adjustment	•	•	•	•	•	•				8-34
DSDU	Pilot operated pressure relief valve	•	•	•							8-40
RE*E*W	Pressure relief valves, proportional adjustment	•	•	•	•	•	•				8-43
RE*E*T	Pressure relief valves, proportional adjustment, OBE	•	•	•	•	•	•				8-47
UR*E/US*E	Pressure unloading valves	•	•	•	•	•	•				8-53
	Combination examples, pressure function	•	•	•	•	•	•				8-59
	Complete valves and combination examples, 2-way and check function										
C1DB	Direct operated check valve	•	•	•	•	•	•	•	•		8-77
SVLB	Pilot operated check valve	•	•	•	•	•					8-79
	Combination examples 2-way and check functions	•	•	•	•	•	•	•	•		8-82
	Complete valves, directional function with position control										
C10D*C		•	•	•	•	•	•	•	•		8-87
	Complete valves, active cartridges										
TDW			•	•	•	•	•	•	•	•	8-94
	Complete valves, flow function										
TDA	2-way proportional throttle valve	•	•	•	•	•	•	•	•		8-106
TEA	2-way proportional throttle valve with shut-off valve			•	•	•	•	•	•		8-110
TDC	2-way high performance proportional throttle valve		•	•	•	•					8-113
TDP	2-way servo proportional valve with VCD® technology		•	•	•	•	•	•	•	•	8-121
TEP	2-way servo proportional valve with shut-off valve		•	•	•	•	•	•	•	•	8-131
TPQ	3-way servo proportional valve with VCD® technology		•	•	•	•	•	•			8-142

Port identifications - graphics

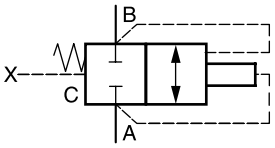

Description

Depending on valve function and design, power ports A and B can be used for inlet or outlet.

The control port C is the connection between cover and cartridge unit.

Control ports

X control oil connection, inlet

Y control oil connection, outlet

Further control ports

Z_1 control oil connection, preferred inlet

Z_2 control oil connection, preferred outlet

Control surfaces - graphics

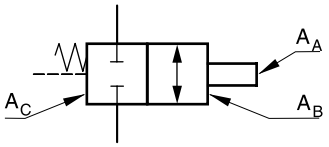

Description

A_A Area, which is subjected to the pressure at port A

A_B Area, which is subjected to the pressure at port B

A_C Area, which is subjected to the pressure at port C

Port identifications - schematics

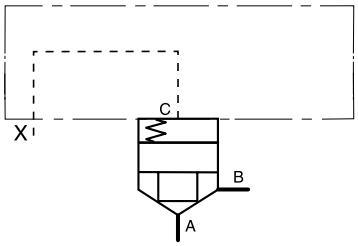

Control surfaces - schematics

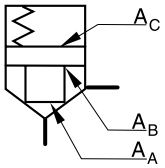

Area representation

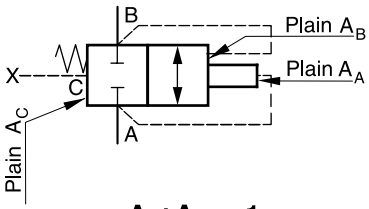

$A_A : A_C = <1$

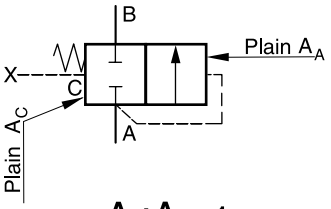

$A_A : A_C = 1$

Design representation

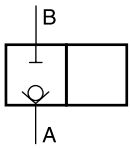

Seat design

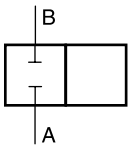

Spool design

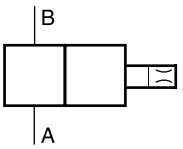

Dampening poppet

8

Code: ISO 7368-B*-*-2-A/B
NG16 to NG63

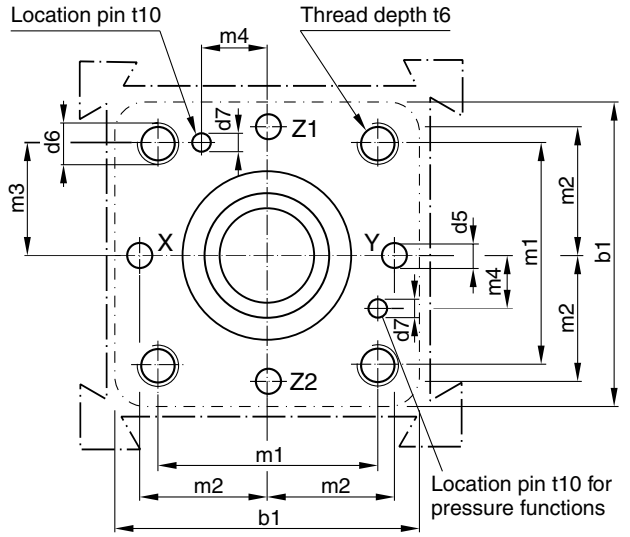

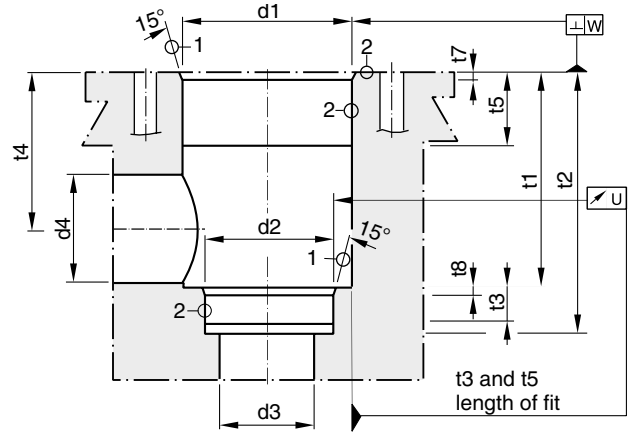

Code: ISO 7368-B*-*-2-A
NG80 to NG100

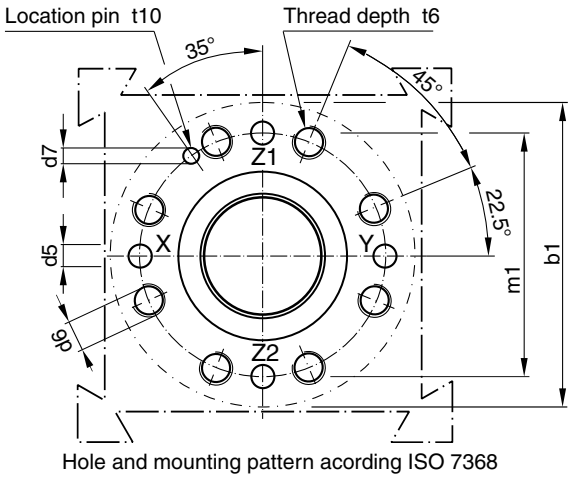

Hole and mounting pattern acording ISO 7368

Required surface finish:

$\textcircled{1} = \sqrt{R_{max}16}, \textcircled{2} = \sqrt{R_{max}8}$

Cartridge manifold block series CB see chapter 12.

8

Nom. size	b1	d1 H7	d2 H7	d3	d3 max	d4	d4 max[1)]	d5 max	d6	d7 H13	m1±0.2	m2±0.2	m3±0.2
16	65	32	25	16	18	16	25	4	M 8	4	46	25	23
25	85	45	34	25	25.5	25	32	6	M 12	6	58	33	29
32	102	60	45	32	36	32	40	8	M 16	6	70	41	35
40	125	75	55	40	43	40	50	10	M 20	6	85	50	42.5
50	140	90	68	50	56	50	63	10	M 20	8	100	58	50
63	180	120	90	63	74	63	80	12	M 30	8	125	75	62.5
80	250	145	110	80	93	80	100	16	M 24	10	200	–	–
100	300	180	135	100	115	100	125	20	M 30	10	245	–	–

Nom. size	m4±0.2	t1+0.1	t2+0.1	t3	t4	t4 max[1)]	t5	t6	t7	t8	t10	U	W
16	10.5	43	56	11	34	29.5	20	20	2	2	10	0.03	0.05
25	16	58	72	12	44	40.5	30	25	2.5	2.5	10	0.03	0.05
32	17	70	85	13	52	48.0	30	35	2.5	2.5	10	0.03	0.1
40	23	87	105	15	64	59.0	30	45	3	3	10	0.05	0.1
50	30	100	122	17	72	65.5	35	45	4	3	10	0.05	0.1
63	38	130	155	20	95	86.5	40	65	4	4	10	0.05	0.2
80	–	175	205	25	130	120	40	50	5	5	10	0.05	0.2
100	–	210	245	29	155	142	50	53	5	5	10	0.05	0.2

[1)] Only together with $d4_{max}$ and $t4_{max}$

2-way slip-in cartridge valves are hydraulically controlled seat valves that are designed for compact block installation. Slip-in cartridge, cover, and pilot system are valve elements that permit single and combined functions.

Series CE offers poppet and sleeve combinations for directional functions. Series CP offers a cartridge for pressure functions and has to be combined with corresponding covers.

Features

- Installation cavity and mounting pattern according to ISO 7368
- 5 poppet shapes
- 5 poppet springs
- Optional seal between ports B and C
- Cover with adjustable stroke limitation
- Cover with mounting pattern for pilot valve assembly
- Combinations for complex functions
- Normally open cartridge (CE*F*)



CE



C*B



C*A



C*C

Pilot control for directional functions

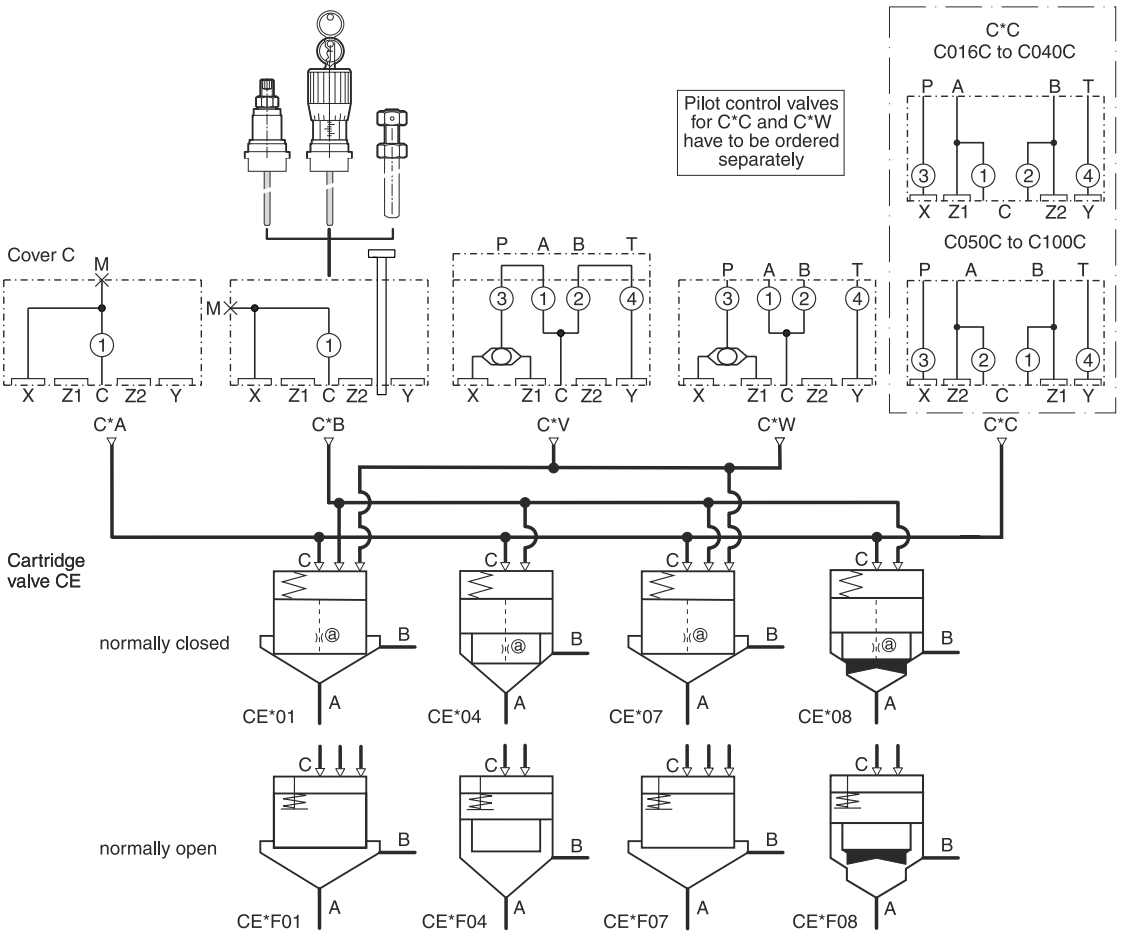

Cartridge valve for directional function normally closed

CE*_01	CE*_04	CE*_07	CE*_08
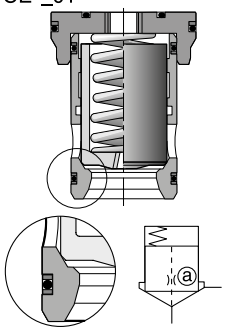	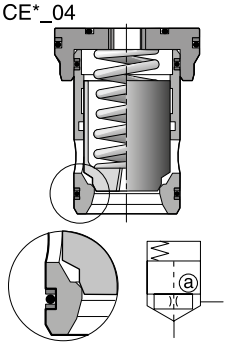	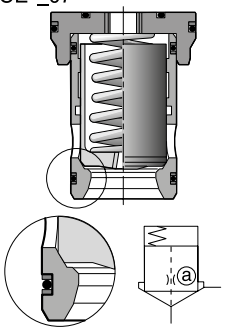	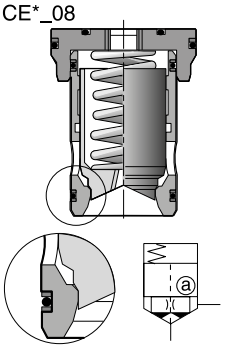
1 : 1 $A_A = A_C$	1 : 1.67 $A_A = 0.6\ A_C$ $A_B = 0.4\ A_C$	1 : 1.04 $A_A = 0.96\ A_C$	1 : 1.67 $A_A = 0.6\ A_C$ $A_B = 0.4\ A_C$ dampening poppet

Normally open

CE*F01	CE*F04	CE*F07	CE*F08
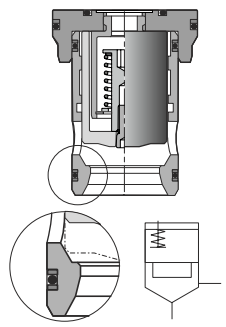	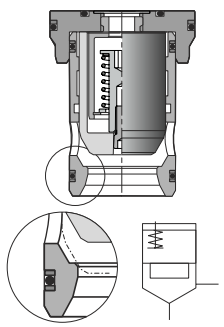	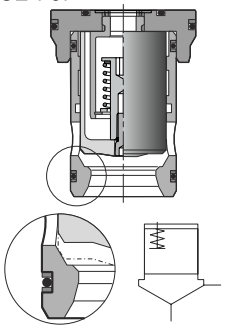	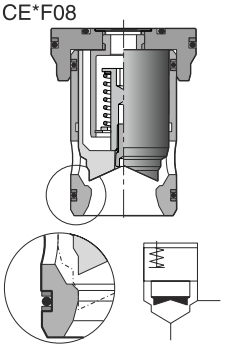
1 : 1 $A_A = A_C$	1 : 1.67 $A_A = 0.6\ A_C$ $A_B = 0.4\ A_C$	1 : 1.04 $A_A = 0.96\ A_C$	1 : 1.67 $A_A = 0.6\ A_C$ $A_B = 0.4\ A_C$ dampening poppet

Cartridge valve for pressure function

CP*_07

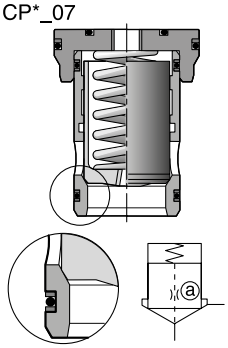

1 : 1.04
$A_A = 0.96\ A_C$
normally closed

Pilot control for pressure function

Pilot control valves for C*C and C*G have to be ordered separately

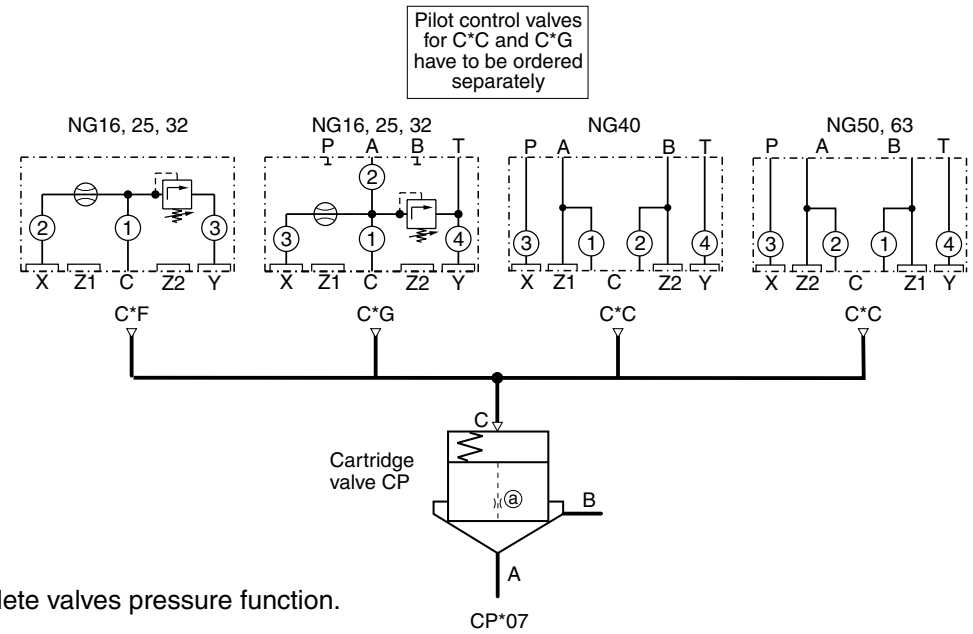

Characteristic curves see complete valves pressure function.

CE — **Cartridge** | **Nominal size** | **Design** | **Poppet area ratio** | **Spring** | **Orifice** | **Seal** | **Design series** (not required for ordering)

Code	Size
016	**NG16**
025	**NG25**
032	**NG32**
040	**NG40**
050	**NG50**
063	**NG63**
080	**NG80**
100	**NG100**

Code	Normal position	Description
C	**Closed**	**No poppet sealing**
S [1]	Closed	With poppet sealing
F [2]	Open	No poppet sealing

Code	Poppet area ratio
01	**$A_A = A_C$**
04	**$A_A = 0.6A_C$, $A_B = 0.4A_C$**
07 [3]	$A_A = 0.96A_C$
08	**$A_A = 0.6A_C$, $A_B = 0.4A_C$ with dampening**

Code	Seal
N	**NBR**
V	FPM

Code	Size	Poppet	Orifice [4]
99	all	all	without orifice, open
00	NG16-NG50	01, 04	closed bottom
	NG16-NG50	07	plug
	NG16-NG32	08	closed bottom
	NG40-NG50		plug
	NG63-NG100	all	plug

Code	Spring
L	Opening pressure 0.1 bar
N	Opening pressure 0.5 bar
S	**Opening pressure 1.6 bar**
T	Opening pressure 2.5 bar
U	Opening pressure 4.0 bar

[1] Only for spring S, T and U. Not for poppet code 01 (NG16 to NG63).
[2] Only with spring code L, only with closed bottom.
[3] Not for NG80 and NG100.
[4] Orifice size in 1/10 mm, eg. 1.2 mm orifice - code 12. Thread size 1/16 NPTF.

CP — **Cartridge** | **Nominal size** | **Design** | **07** Poppet area ratio $A_A = 0.96A_C$ | **Spring** | **Orifice** | **Seal** | **Design series** (not required for ordering)

Code	Size
016	**NG16**
025	**NG25**
032	**NG32**
040	**NG40**
050	**NG50**
063	**NG63**

Code	Normal position	Description
C	**Closed**	**No poppet sealing**
S	Closed	With poppet sealing

Code	Spring
S	**Opening pressure 1.6 bar**
T	Opening pressure 2.5 bar
U	Opening pressure 4.0 bar

Code	Seal
N	**NBR**
V	FPM

Code	Orifice [1]
00	**Plug**
09	0.9 mm for NG16
11	1.1 mm for NG25
12	1.2 mm for NG32
13	1.3 mm for NG40
14	1.4 mm for NG50
15	1.5 mm for NG63

[1] Recommended diameter.

Bold letters =
Short-term availability

For spare parts see "Accessories" in this chapter.
For orifice recommendations see "Combination Examples" in this chapter.

Technical data

General									
Design type			2-way slip-in cartridge valves according to ISO 7368						
Actuation			hydraulic						
Mounting position			unrestricted						
Ambient temperature		[C°]	-20....+60						
$MTTF_D$ value		[years]	150						
Nominal size			**NG16**	**NG25**	**NG32**	**NG40**	**NG50**	**NG63**	**NG80**	**NG100**
Weight	cartridge	[kg]	0.3	0.6	1.1	1.7	3.7	7.1	12.8	27
Hydraulic									
Operating pressure	without pilot valve	[bar]	420						
	port A, B, X, Z1, Z2	[bar]	350, 420 (depending on p_{max} of pilot valves)						
	port Y	[bar]	According to pilot system, max. 350 (depending on p_{max} of pilot valves)						
Nominal flow at Δp 5 bar	poppet 01, 04, 07	[l/min]	250	450	900	1350	1800	3600	5250	8000
	poppet 08	[l/min]	230	400	800	1250	1625	3400	5000	7500
Pilot volume requirement	at poppet 01	[cm^3]	2.0	6.5	10.2	17.4	34.5	77.4	190.1	342.6
	at poppet 04		2.0	6.5	12.2	20.3	39.4	94.6	190.1	363.4
	at poppet 07		2.0	6.5	10.2	17.4	34.5	77.4	—	—
	at poppet 08		2.0	7.4	15.3	23.2	49.2	111.8	217.3	415.3
Opening pressure	flow direction A → B	[bar]	Poppet 01 / 07		spring:	L = 0.1	N = 0.5	S = 1.6	T = 2.5	U = 4.0
			Poppet 04 / 08		spring:	L = 0.2	N = 0.9	S = 2.7	T = 4	U = 6.6
Opening pressure	flow direction B → A	[bar]	Poppet 01 / 07		not possible					
			Poppet 04 / 08		spring:	L = 0.3	N = 1.3	S = 4.0	T = 6.3	U = 10.0
Fluid			Hydraulic oil according to DIN 51524						
Fluid temperature		[C°]	-20...+70 (NBR: -25...+70)						
Viscosity,	permitted	[mm^2/s]	20...400						
	recommended	[mm^2/s]	30...80						
Filtration			ISO 4406 (1999); 18/16/13						

Performance curves (without spring and poppet seal, C-chamber unloaded)

Poppet 01, 04, 07

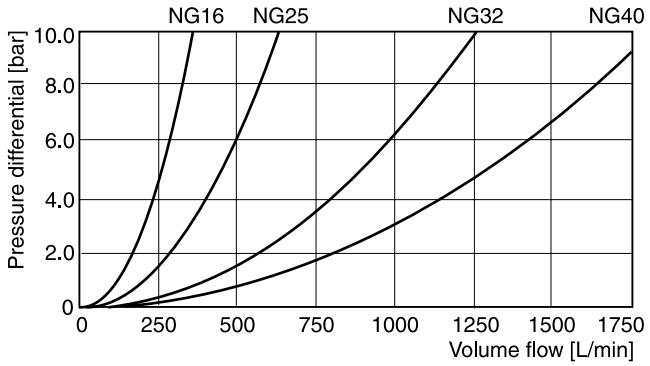

Poppet 08

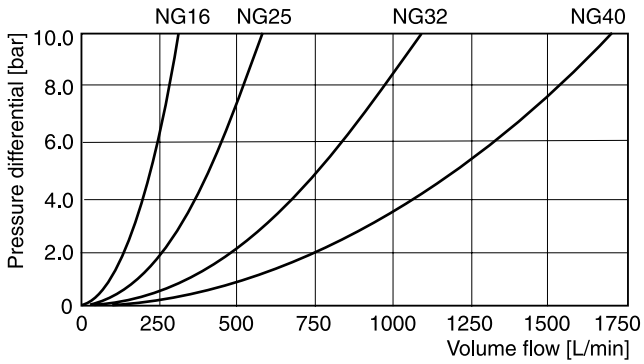

Poppet 01, 04, 07

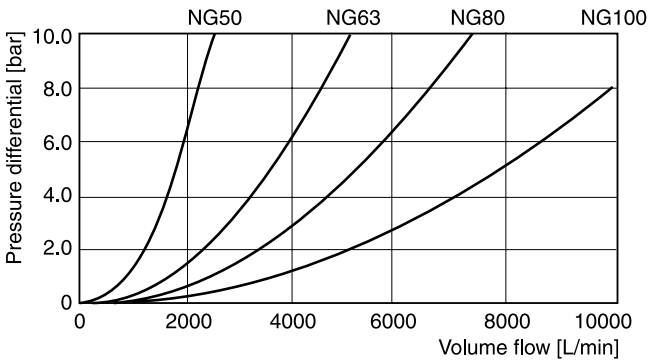

Poppet 08

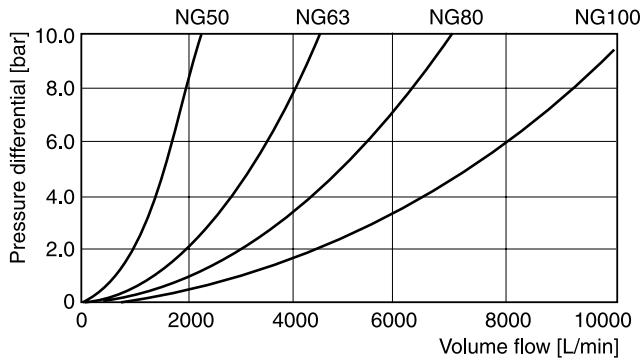

All characteristic curves measured with HLP46 at 50 °C.

CE-C UK.INDD10.04.19

C		A	A			
Cover	**Nominal size**	**Cover with X-connection and gauge port G¼"**	**Without auxilliary function**	**Orifice**	**Seal**	**Design series** (not required for ordering)

Code	Size
016	**NG16**
025	**NG25**
032	**NG32**
040	**NG40**
050	**NG50**
063	**NG63**
080	**NG80**
100	**NG100**

Code	Seal
N	**NBR**
V	FPM

Code	Orifice
99	**Without orifice, open**

Bold letters =
Short-term availability

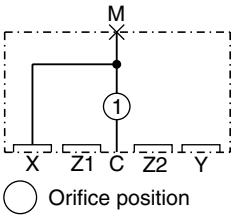

For orifice recommendations, bolt and seal kits see "Accessories" in this chapter.

Dimensions

NG16 to NG63

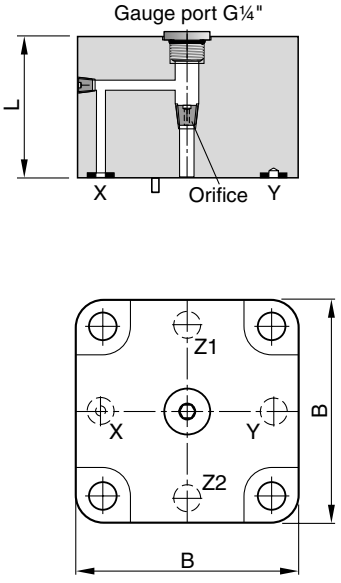

NG80 to NG100

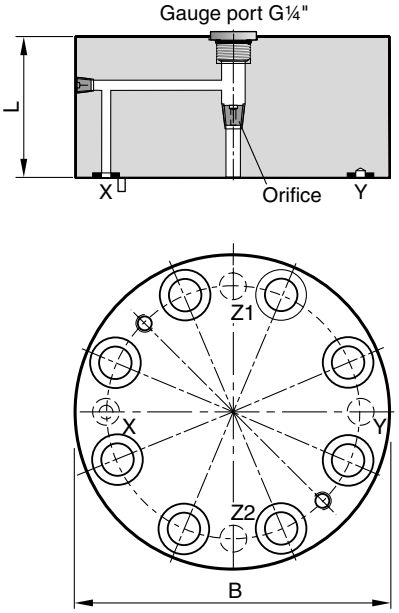

Ports Y, Z1 and Z2: O-ring recess diameter on valve body

Size	B	L	Orifice thread	Weight [kg]
NG16	65	36	1/16 NPT	0.9
NG25	85	45	1/16 NPT	1.9
NG32	102	50	1/16 NPT	2.9
NG40	125	60	1/8 NPT	5.3
NG50	140	70	1/8 NPT	8.5
NG63	180	85	1/8 NPT	15.5
NG80	Ø 250	105	1/8 NPT	34
NG100	Ø 300	120	1/8 NPT	58

C		B	N			
Cover	**Nominal size**	**Cover with X-connection and stroke limiter**	**Adjustment screw/ spindle**	**Orifice**	**Seal**	**Design series** (not required for ordering)

Code	Size
016	**NG16**
025	**NG25**
032	**NG32**
040	**NG40**
050	**NG50**
063	**NG63**
080	**NG80**
100	**NG100**

Code	Seal
N	**NBR**
V	FPM

Code	Orifice
99	**Without orifice, open**

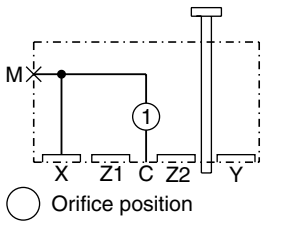

For orifice recommendations, bolt and seal kits see "Accessories" in this chapter.

Bold letters =
Short-term availability

Dimensions NG16 - NG25

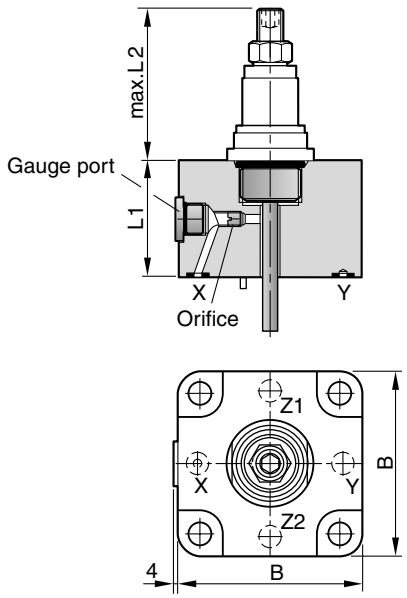

Ports Y, Z1 and Z2: O-ring recess diameter on valve body

Size	B	L1	L2 max.	Gauge port	Orifice thread	Weight [kg]
NG16	65	36	72	G⅛"	M6	0.9
NG25	85	45	72	G¼"	M6	1.9

Dimensions NG32 - NG50

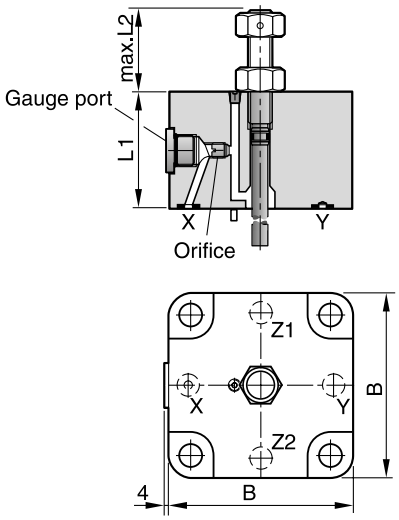

Ports Y, Z1 and Z2: O-ring recess diameter on valve body

Dimensions NG63

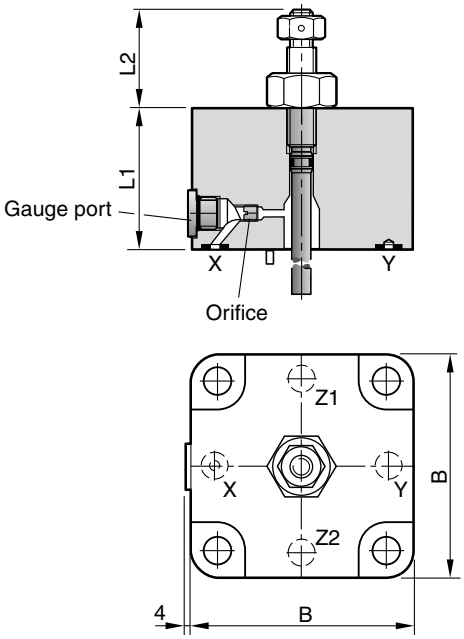

Dimensions NG80-100

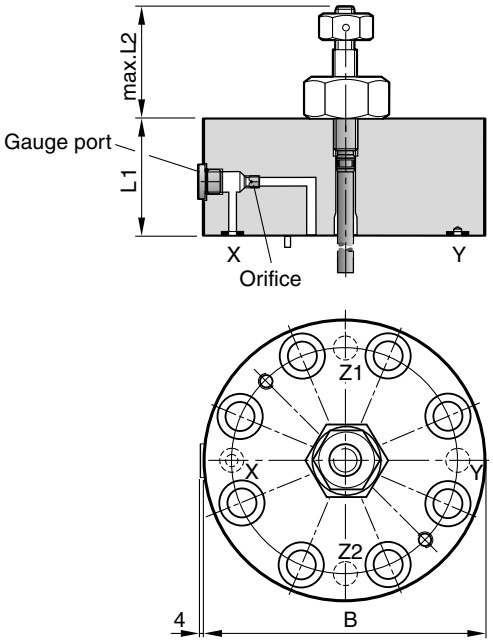

Ports Y, Z1 and Z2: O-ring recess diameter on valve body

Size	B	L1	L2 max.	Gauge port	Orifice thread	Weight [kg]
NG32	102	50	48	G¼"	1/16 NPT	2.91
NG40	125	60	50	G¼"	1/16 NPT	5.39
NG50	140	70	50	G¼"	1/16 NPT	8.41
NG63	180	85	65	G¼"	1/8 NPT	15.1
NG80	Ø 250	105	95	G¼"	1/8 NPT	34.0
NG100	Ø 300	120	120	G¼"	1/8 NPT	60.0

CE-C UK.INDD10.04.19

C		C	A						
				1	2	3	4		
Cover	**Nominal size**	**Cover for pilot system mounting**	**Without auxilliary function**	**Orifice / choke**				**Seal**	**Design series** (not required for ordering)

Code	Size
016	**NG16**
025	**NG25**
032	**NG32**
040	**NG40**
050	**NG50**
063	**NG63**
080	**NG80**
100	**NG100**

Code	Seal
N	**NBR**
V	FPM

Code	Orifice
99	**Without orifice, open**
00	**Plug**

NG16 to NG40

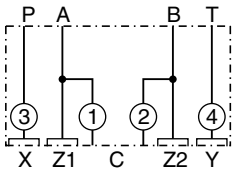

NG50 to NG100

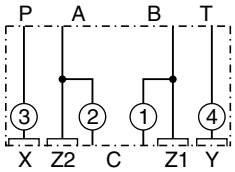

Orifice position

Attention:

For NG50 and larger:
If pilot system NG06 should be used, mount adapter plate PADA 1007/A-B/B-A or PADA 1007/A-A/B-B (NG10 to NG06) see "Accessories" in this chapter.

For orifice recommendations, bolt and seal kits see "Accessories" in this chapter.

Bold letters =
Short-term availability

8

Dimensions NG16

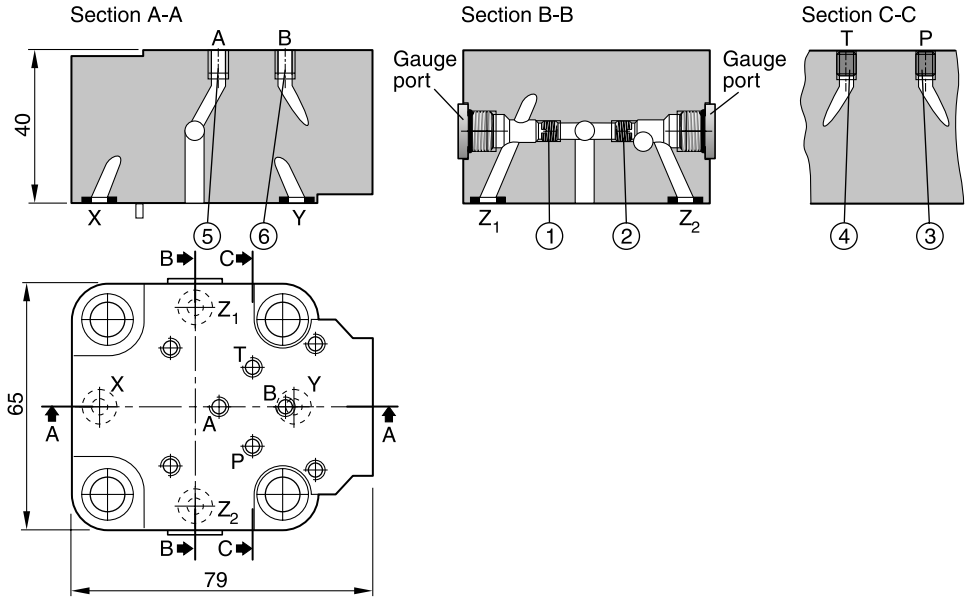

Dimensions NG25 to NG40

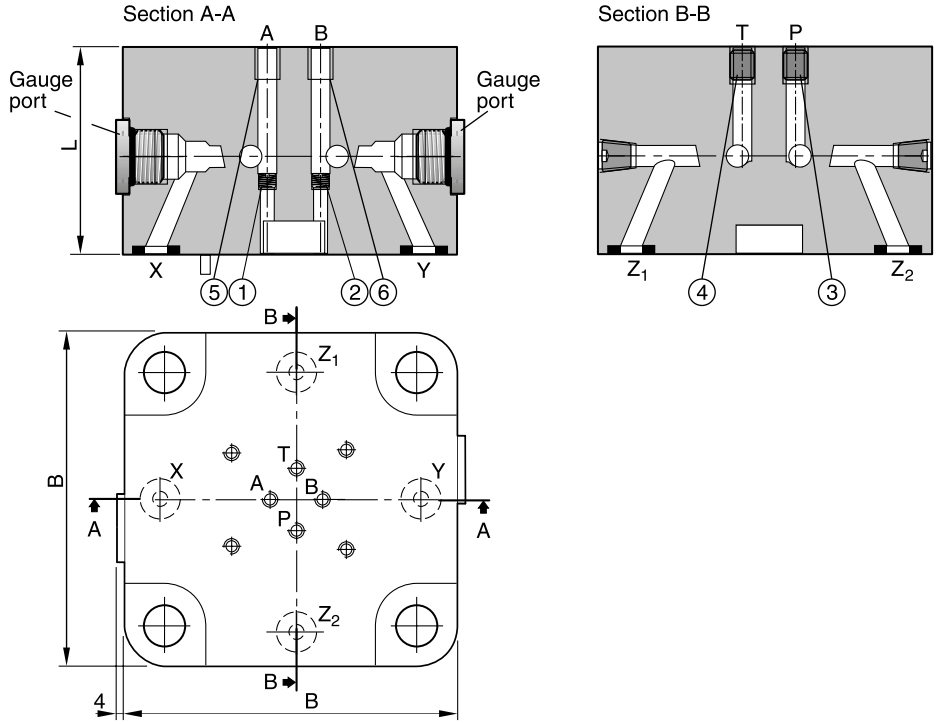

Dimensions NG50 to NG63

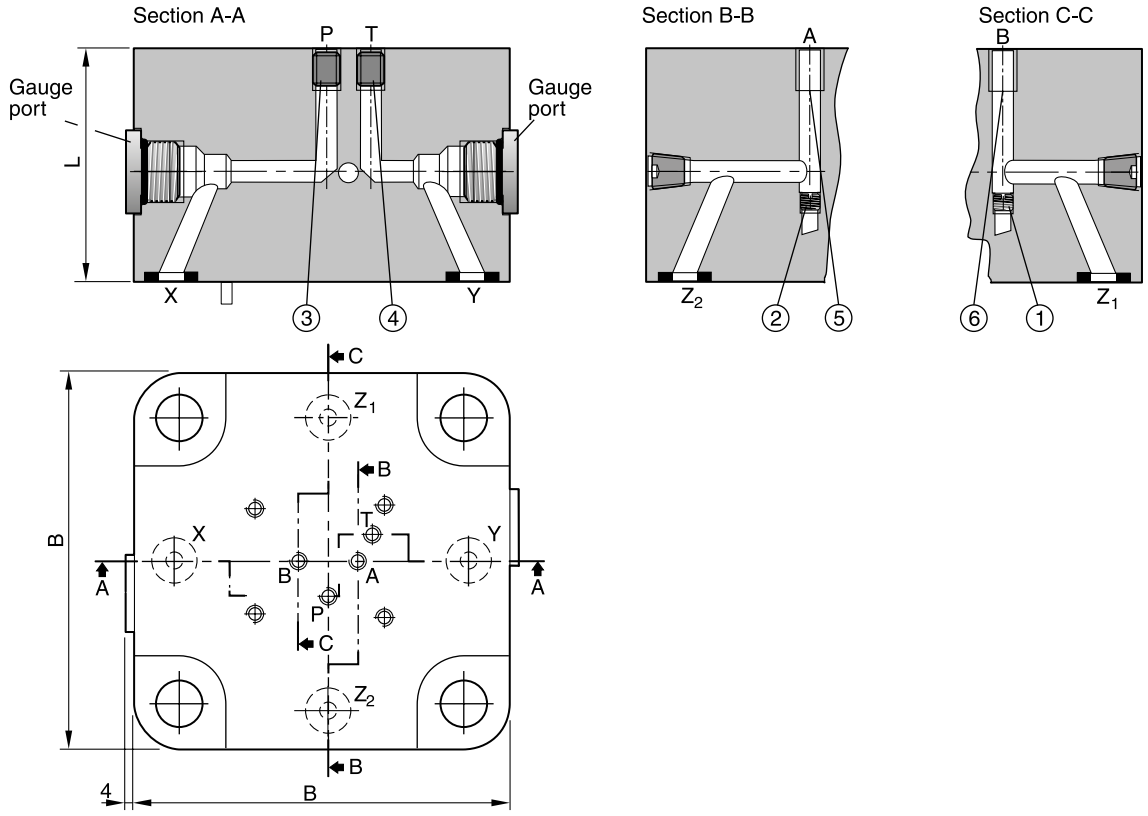

Dimensions NG80 to NG100

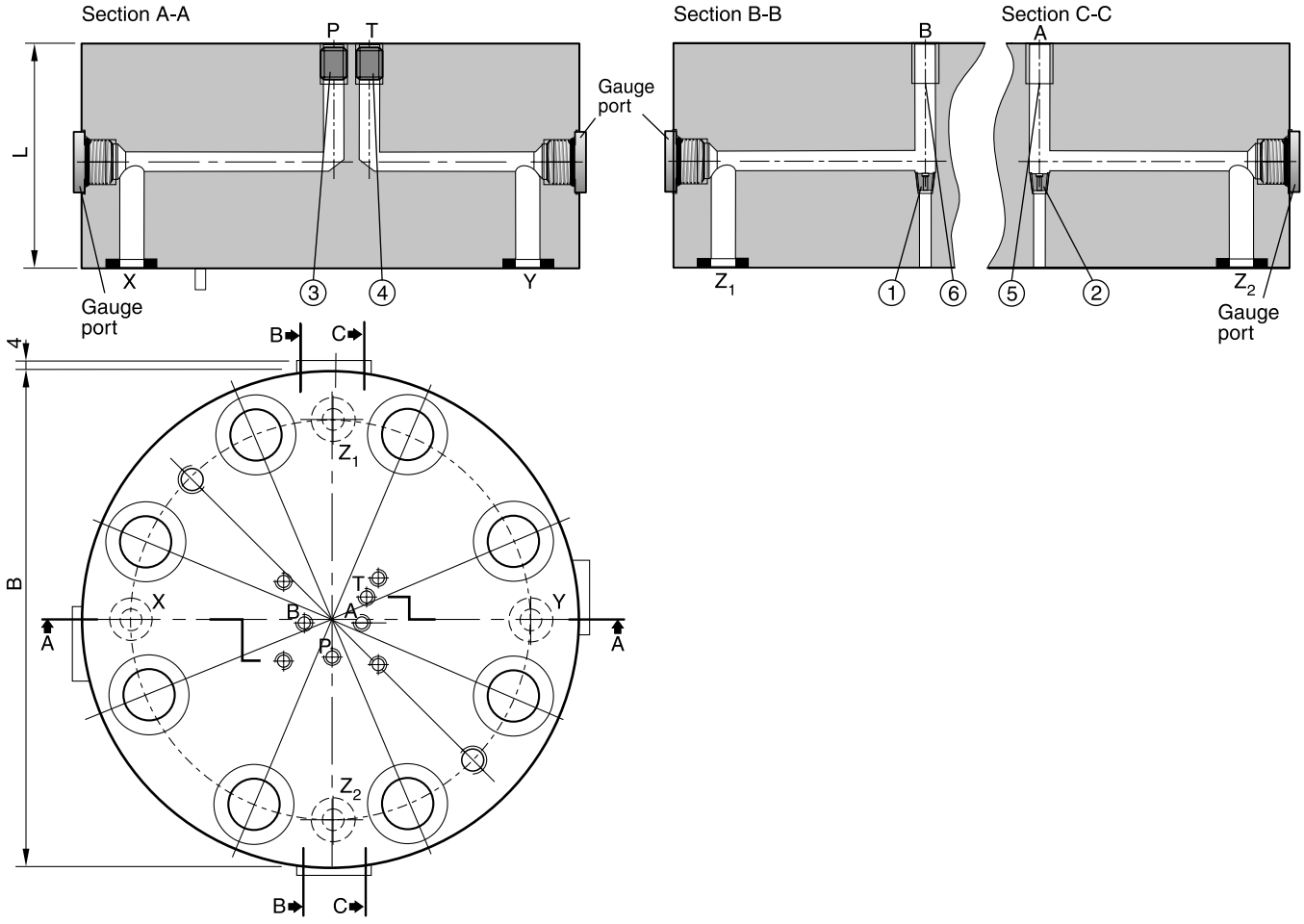

Size	B	L	Gauge port	Weight [kg]	Orifice thread					
					①	②	③	④	⑤	⑥
NG16	79 [1)]	40	G⅛"	1.0	M5	M5	M5	M5	M5	M5
NG25	85	45	G¼"	1.9	M5	M5	M6	M6	M6	M6
NG32	102	50	G¼"	2.9	M5	M5	M6	M6	M6	M6
NG40	125	60	G¼"	5.3	M5	M5	M6	M6	M6	M6
NG50	140	70	G¼"	8.5	M6	M6	M8	M8	M8	M8
NG63	180	85	G¼"	15.3	M6	M6	M8	M8	M8	M8
NG80	Ø 250	105	G¼"	34	1/16 NPT	1/16 NPT	1/8 NPT	1/8 NPT	1/8 NPT	1/8 NPT
NG100	Ø 300	120	G¼"	60	1/16 NPT	1/16 NPT	1/8 NPT	1/8 NPT	1/8 NPT	1/8 NPT

[1)] Width 65 mm.

CE-C UK.INDD10.04.19

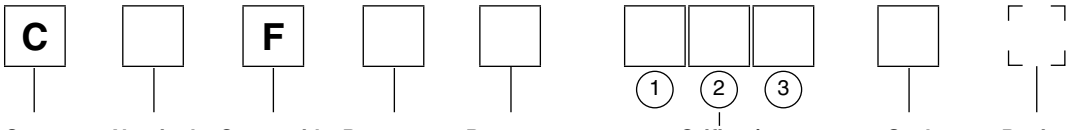

Cover | **Nominal size** | **Cover with pressure relief valve** | **Pressure range** | **Pressure adjustment** | **Orifice / choke** | **Seal** | **Design series** (not required for ordering)

Code	Size
016	**NG16**
025	**NG25**
032	**NG32**

Code	Seal
N	**NBR**
V	FPM

Code	Pressure range [bar]
07	**75**
10	**105**
17	**175**
21	**210**
25	**250**
35	**350**

Code	Orifice
99	**Without orifice, open**

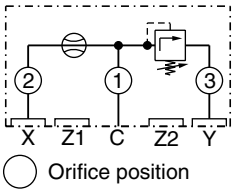

Orifice position

Code	Adjustment
S	**Hand knob (standard)**
A	Acorn nut with lead seal
L	Cylinder lock

Bold letters =
Short-term availability

For orifice recommendations, bolt and seal kits see "Accessories" in this chapter.

8

Dimensions

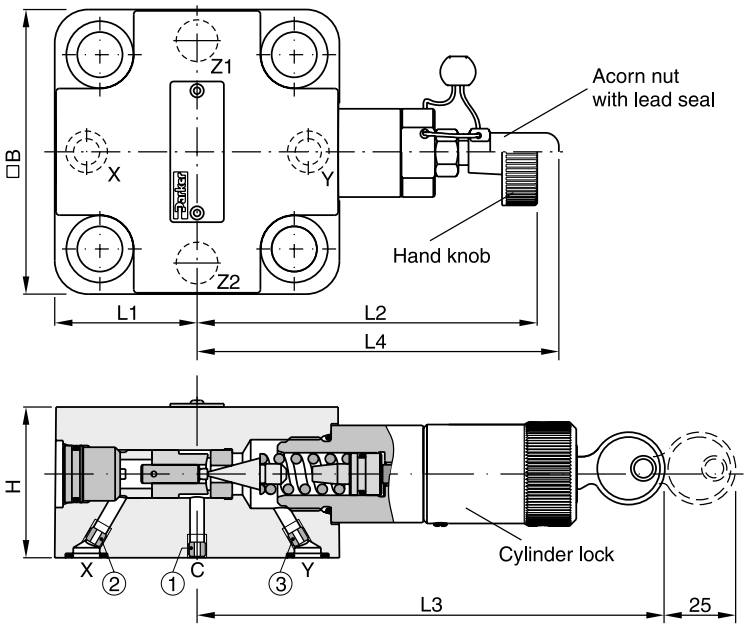

Ports Z1 and Z2: O-ring recess diameter on valve body

Size	B	H	L1	L2 max.	L3	L4	Orifice thread		
							①	②	③
NG16	65 [1)]	40	32.5	114	125.5	117	M5	M4	M5
NG25	85	45	42.5	102	114	105	M5	M5	M5
NG32	102	50	51	95	106	97.5	M6	M6	M6

[1)] Width 79 mm.

CE-C UK.INDD10.04.19

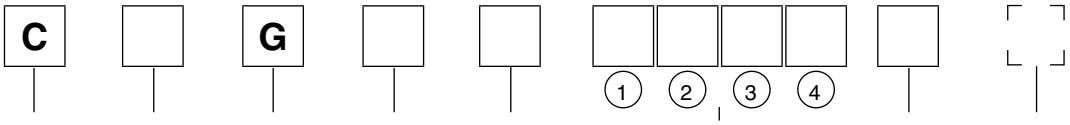

Cover | **Nominal size** | **Cover with pressure relief valve and pilot system mounting** | **Pressure range** | **Pressure adjustment** | **Orifice / choke** | **Seal** | **Design series** (not required for ordering)

Code	Size
016	**NG16**
025	**NG25**
032	**NG32**

Code	Seal
N	**NBR**
V	FPM

Code	Pressure range [bar]
07	**75**
10	**105**
17	**175**
21	**210**
25	**250**
35	**350**

Code	Orifice
99	**Without orifice, open**

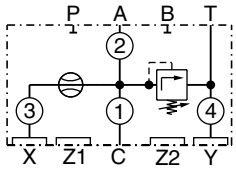

Orifice position

Code	Adjustment
S	**Hand knob (standard)**
A	Acorn nut with lead seal
L	Cylinder lock

Bold letters =
Short-term availability

For orifice recommendations, bolt and seal kits see "Accessories" in this chapter.

Dimensions

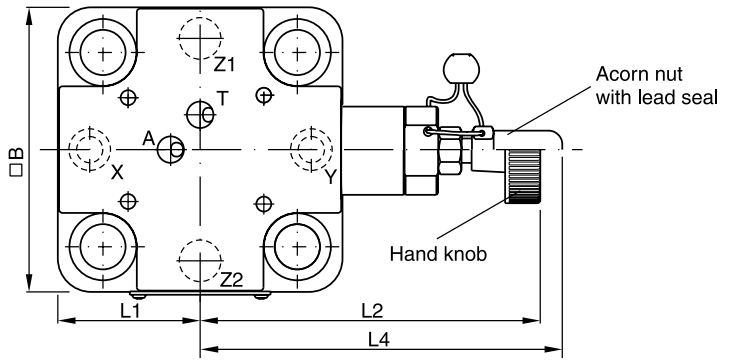

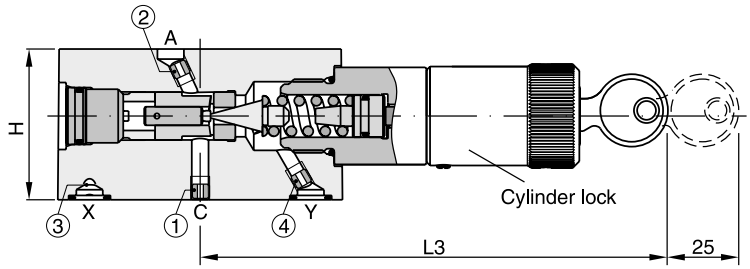

Ports Z1 and Z2: O-ring recess diameter on valve body

Size	B	H	L1	L2 max.	L3	L4	Orifice thread			
							①	②	③	④
NG16	65 [1]	40	32.5	114	125.5	117	M5	M5	M4	M5
NG25	85	45	42.5	102	114	105	M5	M5	M5	M5
NG32	102	50	51	95	106	97.5	M6	M6	M6	M6

[1] Width 79 mm.

CE-C UK.INDD10.04.19

Ordering code

C		H	N					N	
				1	2	3	4		
Cover	**Nominal size**	**Stroke limiter and DC valve mounting pattern**	**Screws with lock nut**	**Orifice / choke**				**Seal NBR**	**Design series** (not required for ordering)

Code	Size
016	**NG16**
025	**NG25**
032	**NG32**
040	**NG40**
050	**NG50**
063	**NG63**
080	**NG80**
100	**NG100**

Code	Orifice
99	**Without orifice, open**
00	**Plug**

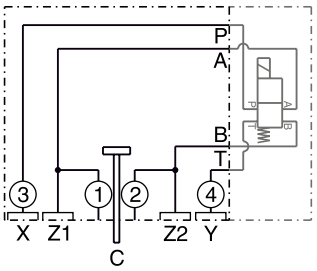

◯ Orifice position

Attention:

For NG63, 80 and 100:
If pilot system NG06 should be used, mount adapter plate PADA 1007/A-B/B-A or PADA 1007/A-A/B-B (NG10 to NG06), see "Accessories" in this chapter.

For orifice recommendations, bolt and seal kits see "Accessories" in this chapter.

Bold letters =
Short-term availability

8

Dimensions NG16

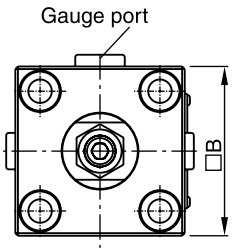

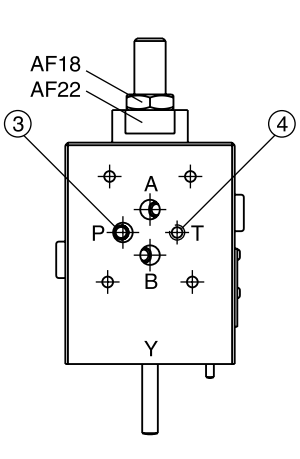

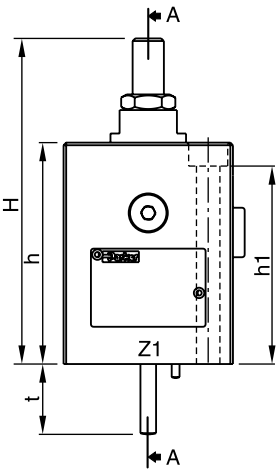

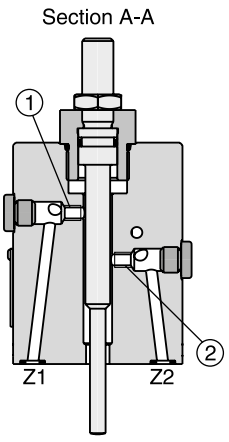

Dimensions NG25 to NG63

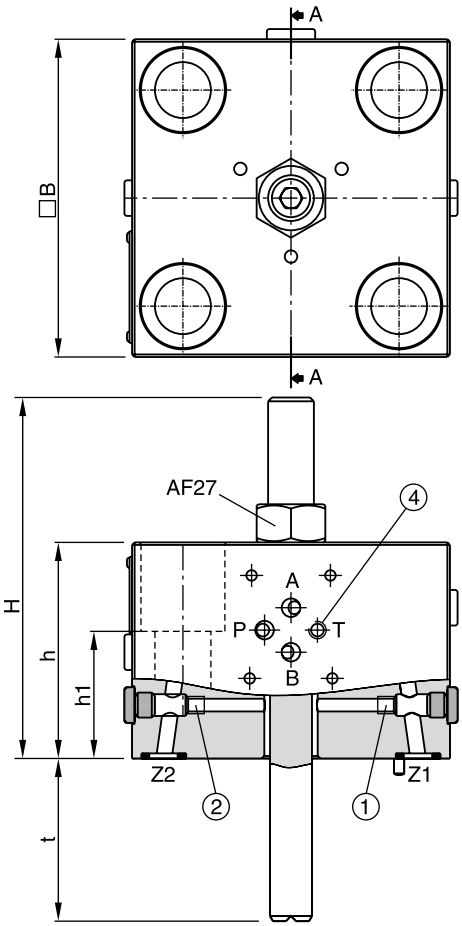

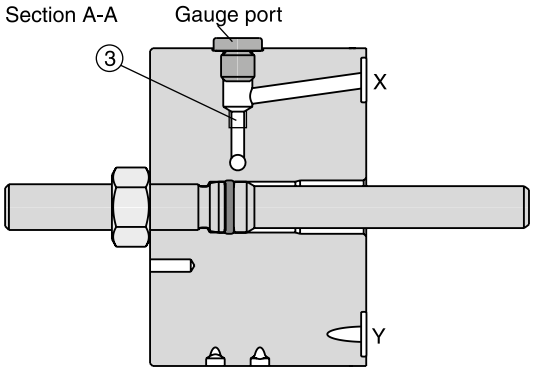

8

Dimensions NG80 to NG100

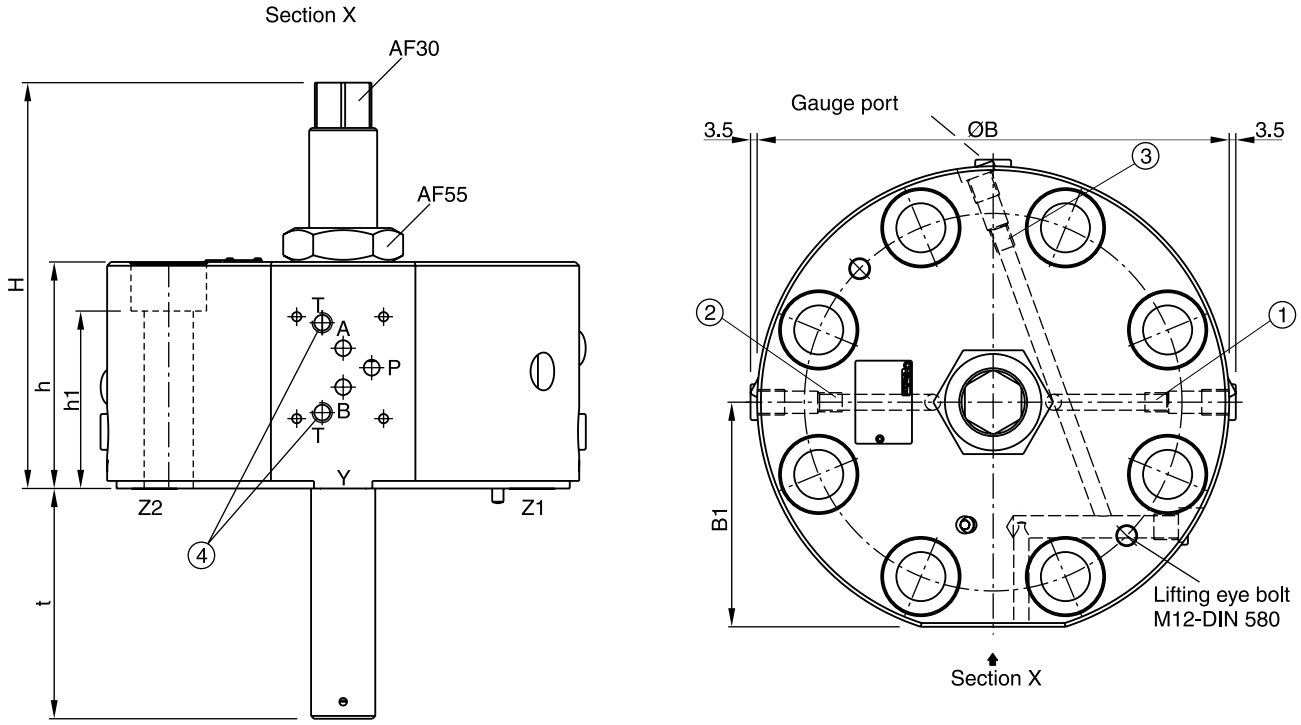

Size	B	B1	H	h	h1	t	Gauge port	Orifice thread			
								①	②	③	④
NG16	65	–	125	85	76	27	G1/4	M5	M5	M5	M5
NG25	85	–	114	85	70	36.5	G1/4	M6	M6	M6	M6
NG32	102	–	132.5	85	56	47.5	G1/4	M6	M6	M6	M6
NG40	125	–	142	85	50	64	G1/4	M6	M6	M6	M6
NG50	140	–	147.5	85	60	72.5	G1/4	M8	M8	M8	M8
NG63	180	–	161	110	75	90	G1/4	M8	M8	M8	M8
NG80	Ø 250	119	215	120	94	122	G1/4	1/8 NPT	1/8 NPT	1/8 NPT	1/8 NPT
NG100	Ø 300	144	240	120	85	145	G1/4	1/8 NPT	1/8 NPT	1/8 NPT	1/8 NPT

Ordering code

C		V	A						
				①	②	③	④		
Cover	**Nominal size**	**Cover with shuttle valve**	**w/o additional option**	**Orifice / choke**				**Seal**	**Design series** (not required for ordering)

Code	Size
016	**NG16**
025	**NG25**
032	**NG32**
040	**NG40**
050	**NG50**
063	**NG63**

Bold letters =
Short-term availability

Code	Seal
N	**NBR**
V	FPM

Code	Orifice
99	**Without orifice, open**

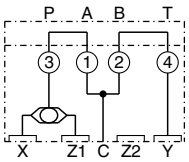

Orifice position

For orifice recommendations, bolt and seal kits see "Accessories" in this chapter.

Dimensions

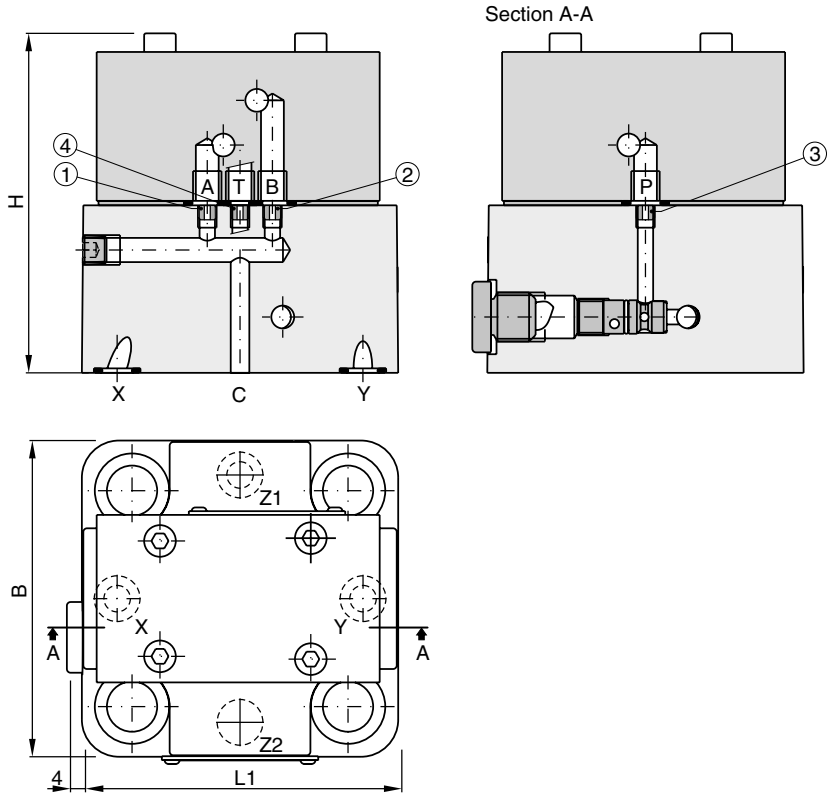

Port Z2: O-ring recess diameter on valve body

Size	B	H	L1	Orifice thread			
				①	②	③	④
NG16	65	86.5	85	M5	M5	M5	M5
NG25	85	91.5	85	M5	M5	M5	M5
NG32	102	96.5	102	M5	M5	M5	M5
NG40	125	106.5	125	M6	M6	M6	M6
NG50	140	126.5	140	M8	M8	M8	M8
NG63	180	141	180	M8	M8	M8	M8

CE-C UK.INDD10.04.19

C		W	A	① ② ③ ④		
Cover	**Nominal size**	**Cover with shuttle valve and pilot system mounting**	**w/o additional option**	**Orifice / choke**	**Seal**	**Design series** (not required for ordering)

Code	Size
016	**NG16**
025	**NG25**
032	**NG32**
040	**NG40**
050	**NG50**
063	**NG63**

Bold letters =
Short-term availability

Code	Seal
N	**NBR**
V	FPM

Code	Orifice
99	**Without orifice, open**

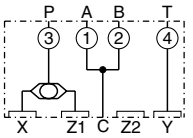

◯ Orifice position

For orifice recommendations, bolt and seal kits see "Accessories" in this chapter.

Dimensions

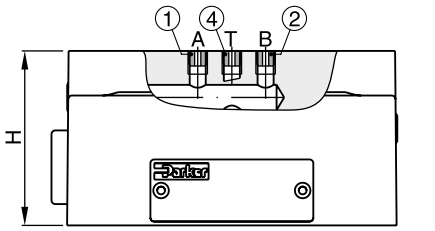

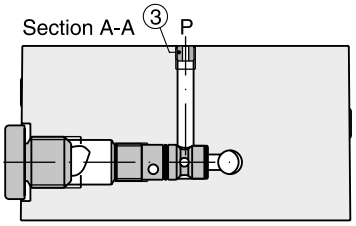

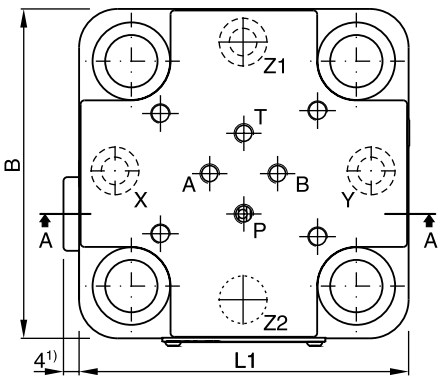

1) 2.5 mm at NG16

For NG50, NG63

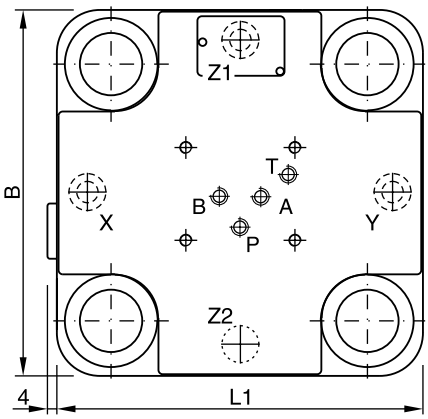

Port Z2: O-ring recess diameter on valve body

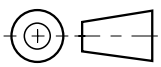

Size	B	H	L1	Orifice thread			
				①	②	③	④
NG16	65	40	77.5	M5	M5	M5	M5
NG25	85	45	85	M5	M5	M5	M5
NG32	102	50	102	M5	M5	M5	M5
NG40	125	60	125	M6	M6	M6	M6
NG50	140	70	140	M8	M8	M8	M8
NG63	180	85	180	M8	M8	M8	M8

Pilot valve with pressure relief function R06M, sub-plate mounting NG06, see combination examples.
$MTTF_D$ value 150 years, flow rate maximum 5 l/min.



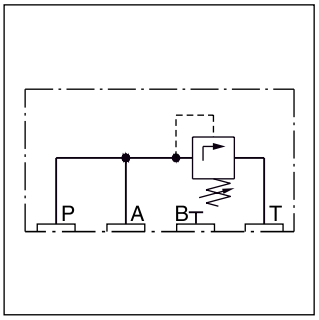

Ordering code

R06M | ☐ | ☐ | **4** | ☐ | ⬚

Pressure range | **Pressure adjustment** | **Pilot oil** | **Seal** | **Design series** (not required for ordering)

Code	Pressure range [bar]
10	**105**
17	**175**
21	**210**
25	**250**
35	**350**

Code	Seal
N	**NBR**
V	FPM

Code	Adjustment
S	**Hand knob (standard)**
A	Acorn nut with lead seal
L	Cylinder lock

Bold letters =
Short-term availability

8

Dimensions

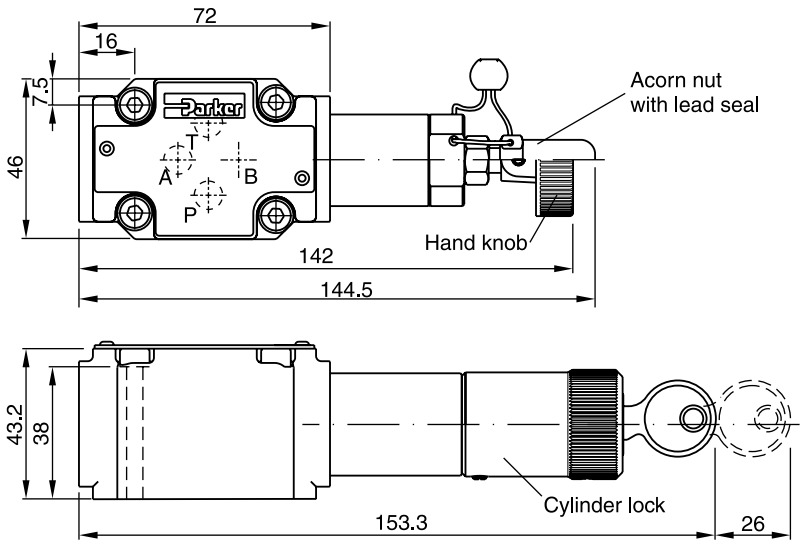

Pilot valve with pressure relief function RS06M, sandwich plate mounting NG06, see combination examples. $MTTF_D$ value 150 years, flow rate maximum 5 l/min.



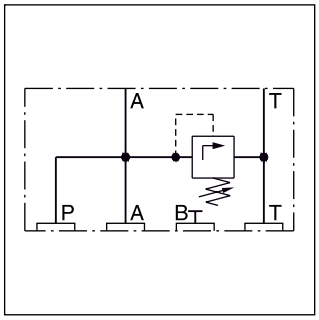

Ordering code

RS06M | ☐ | ☐ | **4** | ☐ | ⌜ ⌝

Pressure range | **Pressure adjustment** | **Pilot oil** | **Seal** | **Design series** (not required for ordering)

Code	Pressure range [bar]
10	**105**
17	**175**
21	**210**
25	**250**
35	**350**

Code	Seal
N	**NBR**
V	FPM

Code	Adjustment
S	**Hand knob (standard)**
A	Acorn nut with lead seal
L	Cylinder lock

Bold letters =
Short-term availability

8

Dimensions

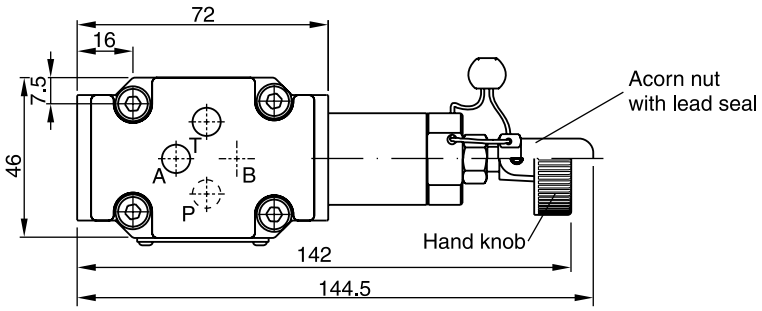

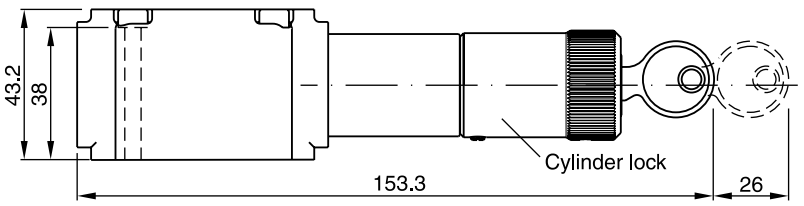

Pilot valve with proportional relief function RPDM2*,
sandwich mounting NG06.
$MTTF_D$ value 150 years, flow rate maximum 5 l/min.

*For technical details see series RE06M*W.



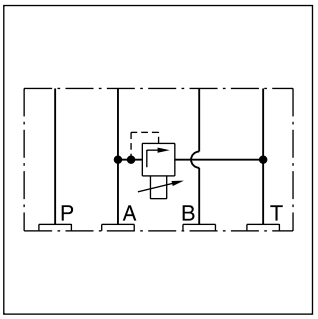

RPDM2AT

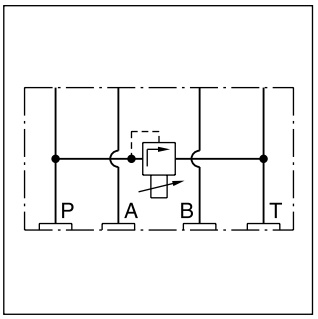

RPDM2PT

Ordering code

RPDM	2				V	
	Pressure adjustment	**Pressure relief**	**Pressure range**	**Solenoid voltage**	**Seal FPM**	**Design series** (not required for ordering)

Code	Adjustment
AT	A to T
PT	P to T

Code	Solenoid voltage
K	**12 V, 2.5 A**
X	16 V, 1.3 A

Code	Pressure range [bar]
10	105
17	175
25	250
35	350

Bold letters =
Short-term availability

Dimensions

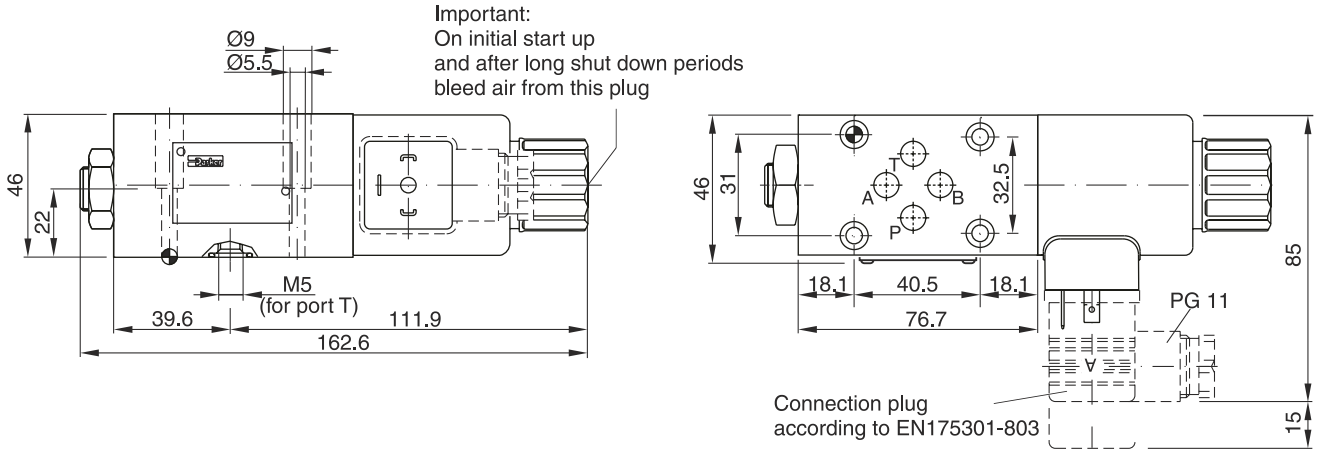

access08.INDD 10.04.19

Sandwich valve with pressure relief function ZUDB, sandwich plate mounting NG06, see combination examples. $MTTF_D$ value 150 years, flow rate maximum 5 l/min.



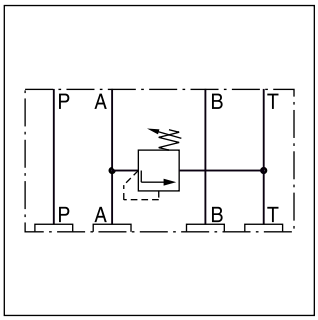

ZUDB1AT*

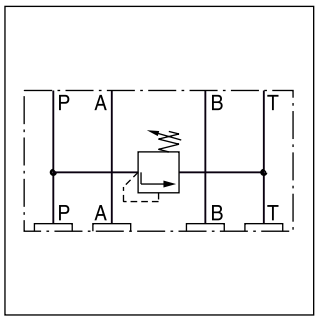

ZUDB1PT*

Ordering code

□ – **ZUDB1** □ □ **Z07** □

	Seal	Pressure relief	Pressure adjustment		Pressure range

Code	Seal
omit	**NBR**
V	FPM

Code	Pressure relief
AT	**A to T**
PT	**P to T**

Code	Pressure range [bar]
B	**70**
E	**175**
G	**250**
K	**350**

Code	Adjustment
2	**Hexagon screw with lock nut**
61	Cylinder lock

Bold letters =
Short-term availability

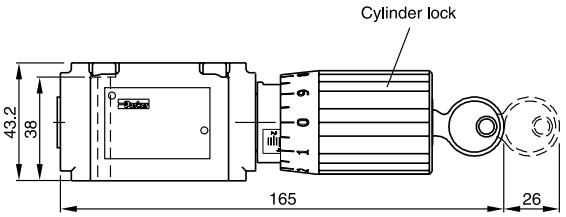

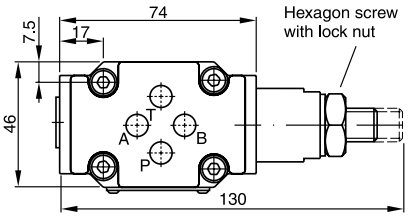

Pilot valve with preload function DSB*P*, subplate mounting NG06, see combination examples.
$MTTF_D$ value 150 years, flow rate maximum 5 l/min.



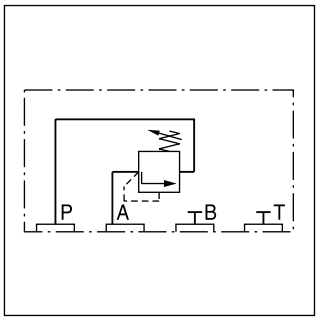

□ – **DSBA100** □ **P07** □

Seal | **Pressure adjustment** | **Pressure range**

Code	Seal
omit	**NBR**
V	FPM

Code	Adjustment
2	**Hexagon screw with lock nut**
61	Cylinder lock

Code	Pressure range [bar]
B	**70**
E	**175**
G	**250**
K	**350**

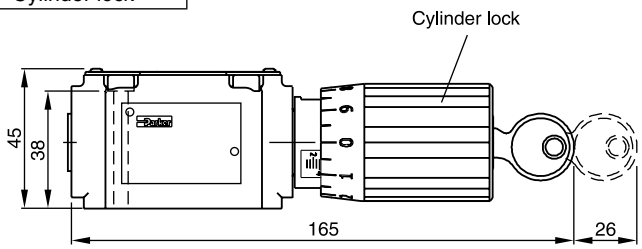

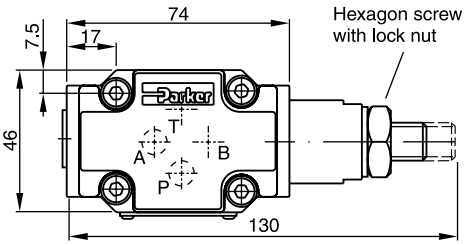

Pilot valve with preload function DSB*Z*, sandwich plate mounting NG06, see combination examples.
$MTTF_D$ value 150 years, flow rate maximum 5 l/min.



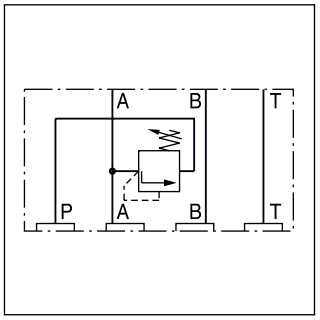

□ – **DSBA100** □ **Z07** □

Seal | **Pressure adjustment** | **Pressure range**

Code	Seal
omit	**NBR**
V	FPM

Code	Adjustment
2	**Hexagon screw with lock nut**
61	Cylinder lock

Code	Pressure range [bar]
B	**70**
E	**175**
G	**250**
K	**350**

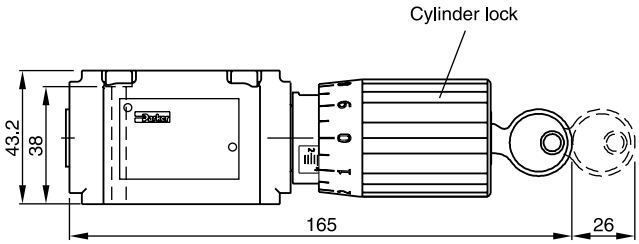

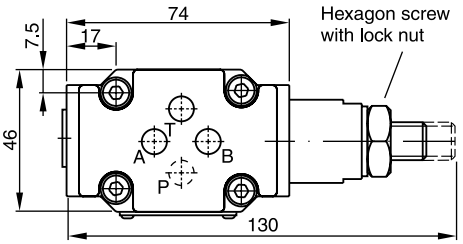

Bold letters =
Short-term availability

Pilot valve with unloading function UR06M, subplate mounting NG06, see combination examples. $MTTF_D$ value 150 years, flow rate maximum 5 l/min.



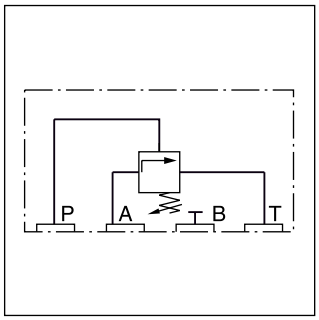

UR | **06** | **M** | | | **4** | |

Pressure range | Adjustment | Pilot oil drain internal | Seal

Code	Pressure range [bar]
07	70
17	175
25	250
35	350

Code	Seal
N	NBR
V	FPM

Code	Adjustment
S	Hand knob (standard)
A	Acorn nut with lead seal
L	Cylinder lock

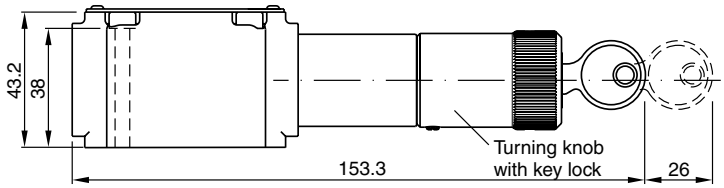

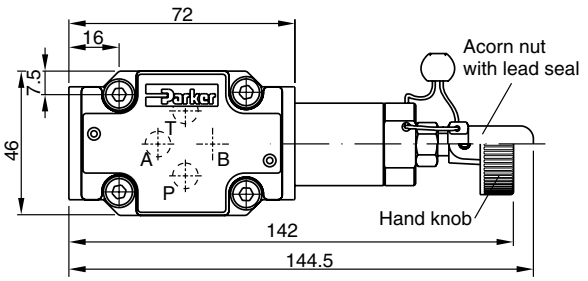

8

Pilot valve with unloading function US06M, sandwich plate NG06, see combination examples. $MTTF_D$ value 150 years, flow rate maximum 5 l/min.



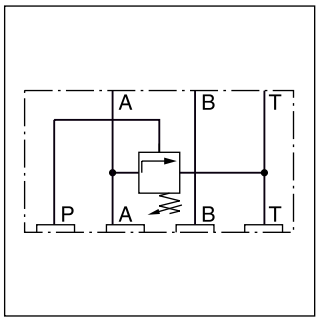

US | **06** | **M** | | | **4** | |

Pressure range | Adjustment | Pilot oil drain internal | Seal

Code	Pressure range [bar]
07	70
17	175
25	250
35	350

Code	Seal
N	NBR
V	FPM

Code	Adjustment
S	Hand knob (standard)
A	Acorn nut with lead seal
L	Cylinder lock

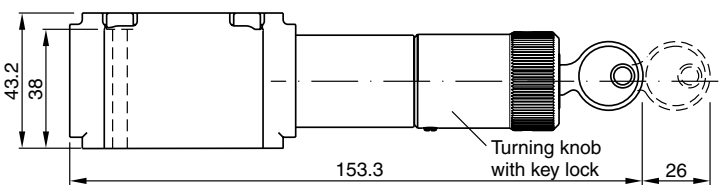

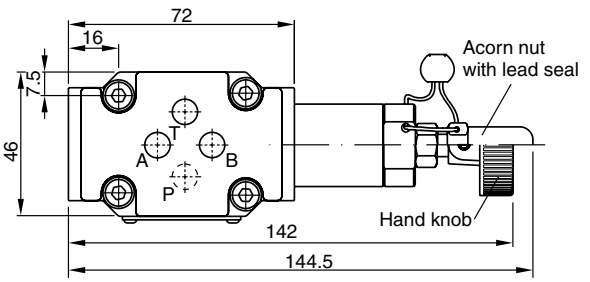

Pilot valve for pressure sequence function S06M, subplate mounting NG06, see combination examples.

$MTTF_D$ value 150 years, flow rate maximum 5 l/min.



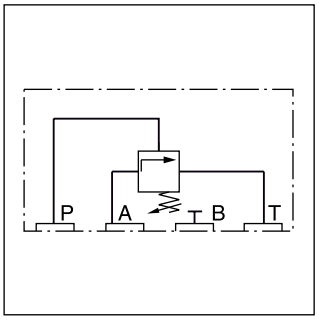

Ordering code

S06M			4		
	Pressure range	Pressure adjustment	Pilot oil inlet internal/ outlet internal	Seal	Design series (not required for ordering)

Code	Pressure range [bar]
07	**70**
17	**175**
25	**250**
35	**350**

Code	Seal
N	**NBR**
V	FPM

Code	Adjustment
S	**Hand knob (standard)**
A	Acorn nut with lead seal
L	Cylinder lock

Bold letters =
Short-term availability

Dimensions

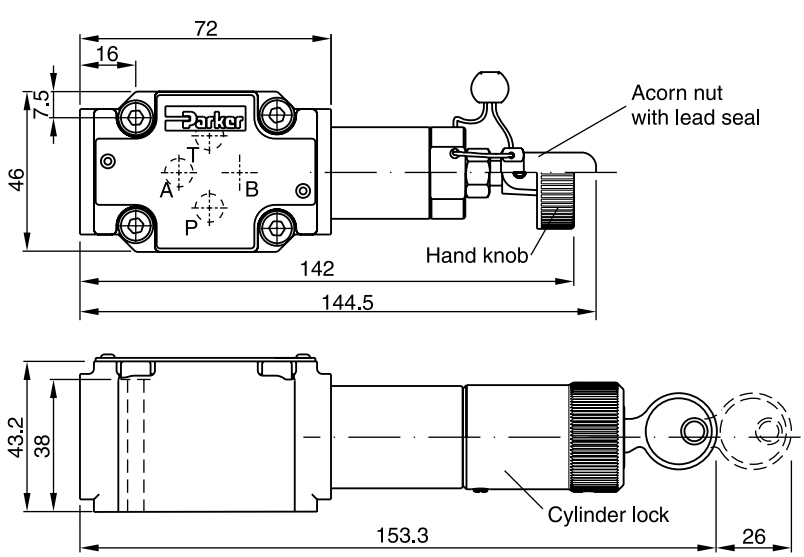

Check valve, hydraulically pilot operated NG06
with pilot control, for subplate mounting.

$MTTF_D$ value 75 years, flow rate maximum 5 l/min.

Ordering code

SVLA1006P07



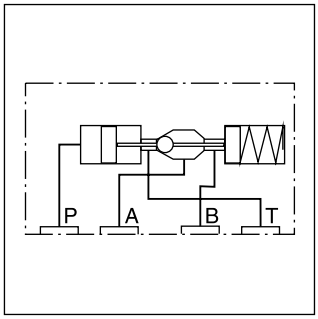

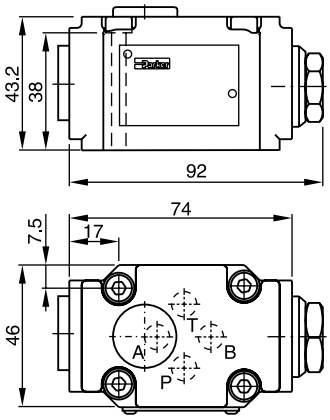

Shuttle valve - sandwich plate mounting NG06

$MTTF_D$ value 150 years, flow rate maximum 5 l/min.

Ordering code

ZSRA1PP0Z07



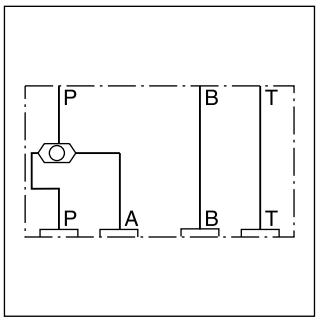

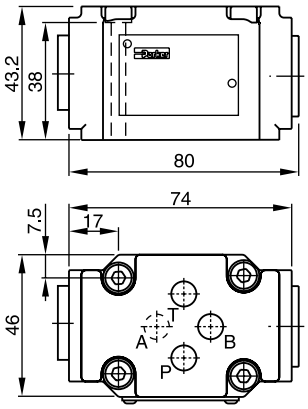

Shuttle valve - sandwich plate mounting NG06

$MTTF_D$ value 150 years, flow rate maximum 5 l/min.

Ordering code

ZSRB1AA0Z07



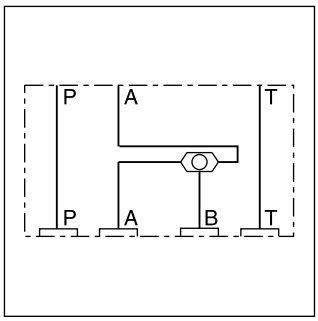

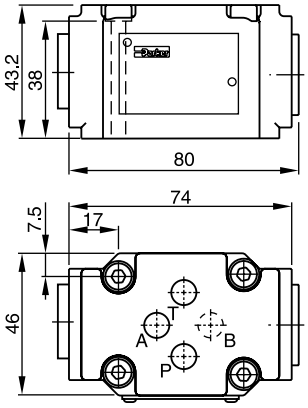

Symbol	Type	Size	Hight
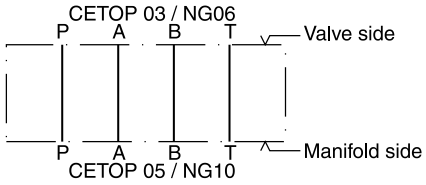	**PADA 1007-AA-BB**	NG10-NG06	25
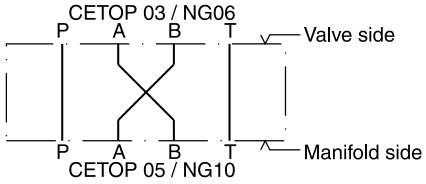	**PADA 1007/A-B/B-A**	NG10-NG06	25
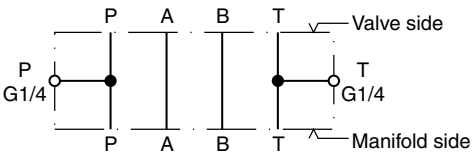	H06-1044	NG06	30
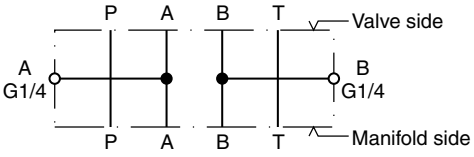	**H06-1039**	NG06	30
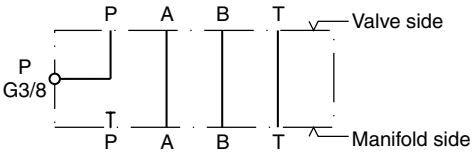	**H06-504**	NG06	30
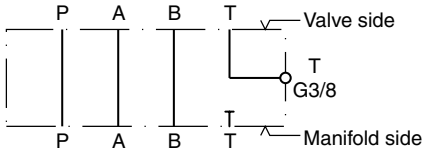	**H06-711**	NG06	30
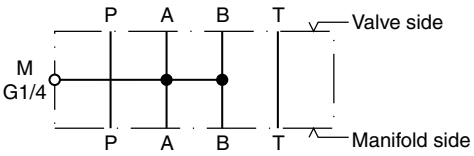	H06-1274	NG06	30
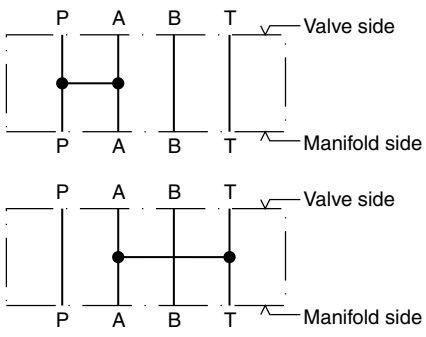	**H06-1040**	NG06	30

Bold letters =
Short-term availability

Attention: Details for cover-, sandwich- and adaptor plates see chapter 12.

Symbol	Type	Size	Hight
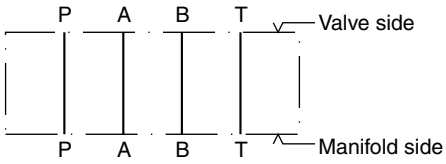	**H06DO-1291**	NG06	10
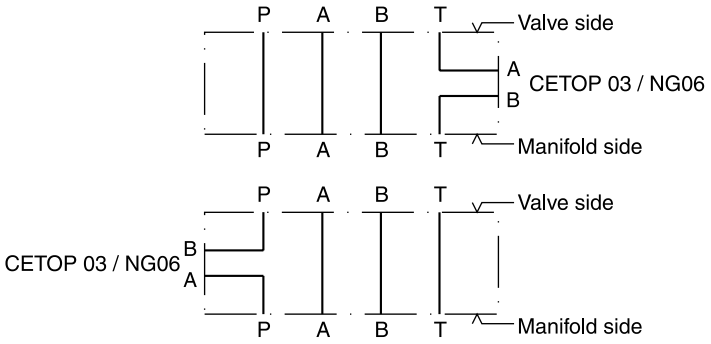	H06DU-814	NG06	71.3
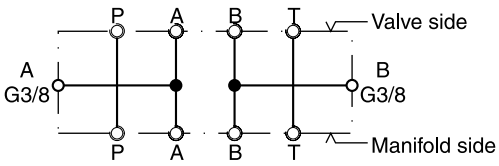 All ports can be equipped with orifices or plugs (1/16NPT)	CS06040N	NG06	40.3
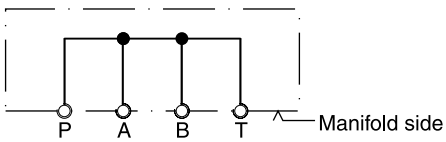 All ports can be equipped with orifices or plugs (1/16NPT)	CS06082N	NG06	40.3
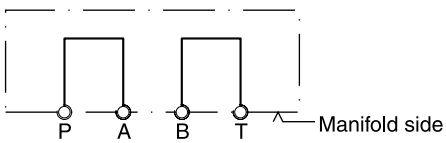 All ports can be equipped with orifices or plugs (1/16NPT)	CS06080N	NG06	40.3
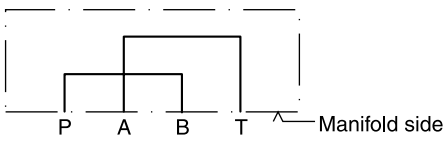	**D51DC071D**	NG06	26.3
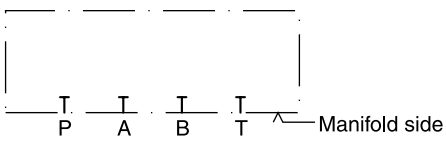	**D51VP071C** **D51VP101D**	NG06 NG10	26.3 26.9

Attention:
Details for cover-, sandwich- and adaptor plates see chapter 12.

Bold letters =
Short-term availability

Poppets, sleeves, spacer rings

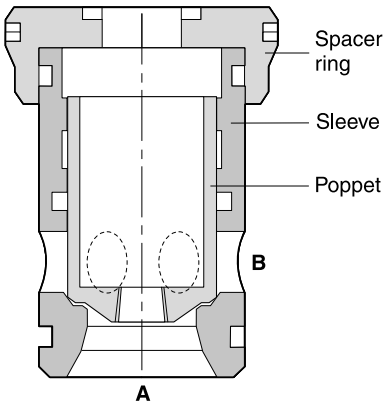

Size	16	25	32	40	50	63	80	100
Poppet 01	RK-45036369	RK-45036379	RK-45036392	RK-45036409	RK-45036421	RK-45036437	RK-35036449	RK-35036467
Poppet 04	RK-45036370	RK-45036380	RK-45036395	RK-45036406	RK-45036422	RK-45036436	RK-35036460	RK-35036468
Poppet 07	RK-35037531	RK-45036964	RK-45036965	RK-45036966	RK-45036967	RK-45036968	—	—
Poppet 08	RK-45036368	RK-45036381	RK-45036391	RK-45036408	RK-45036424	RK-45036438	RK-35036459	RK-35036469
CE-sleeve	RK-35038871	RK-35038872	RK-35038873	RK-35036403	RK-35036417	RK-25036432	RK-25036452	RK-25036470
CP-sleeve	RK-35039384	RK-35039385	RK-35039386	RK-35039387	RK-35039388	RK-35039389	—	—
Spacer ring	RK-35036364	RK-35036375	RK-45036393	RK-35036402	RK-35036416	RK-35036435	RK-25036453	RK-25036471

Springs, seals, fitting bolts

Size / Spring [1]	16	25	32	40	50	63	80	100
Type L; 0.1 bar	FK-CE016-L	FK-CE025-L	FK-CE032-L	FK-CE040-L	FK-CE050-L	FK-CE063-L	FK-CE080-L	FK-CE100-L
Type N; 0.5 bar	FK-CE016-N	FK-CE025-N	FK-CE032-N	FK-CE040-N	FK-CE050-N	FK-CE063-N	FK-CE080-N	FK-CE100-N
Type S; 1.6 bar	FK-CE016-S	FK-CE025-S	FK-CE032-S	FK-CE040-S	FK-CE050-S	FK-CE063-S	FK-CE080-S	FK-CE100-S
Type T; 2.5 bar	FK-CE016-T	FK-CE025-T	FK-CE032-T	FK-CE040-T	FK-CE050-T	FK-CE063-T	FK-CE080-T	FK-CE100-T
Type U; 4.0 bar	FK-CE016-U	FK-CE025-U	FK-CE032-U	FK-CE040-U	FK-CE050-U	FK-CE063-U	FK-CE080-U	FK-CE100-U
Seal kits FPM NBR	SK-CBE160V SK-CBE160	SK-CBE250V SK-CBE250	SK-CBE320V SK-CBE320	SK-CBE400V SK-CBE400	SK-CBE500V SK-CBE500	SK-CBE630V SK-CBE630	SK-CBE800V SK-CBE800	SK-CBE1000V SK-CBE1000
Bolt kits (ISO 4762-12.9)	BK414 4x M8x40	BK391 4x M12x50	BK415 4x M16x55	BK416 4x M20x70	BK417 4x M20x75	BK418 4x M30x100	BK419 8x M24x120	BK509 8x M30x130
Recommended torque [Nm]	31.8	108	264	517	517	1775	890	1775

Ordering code example:
FK-CE016-U ⇒ 10 pcs., spring for NG16, type U

[1] 1 spring kit contains 10 springs.

Diagram to choose the orifice Ø

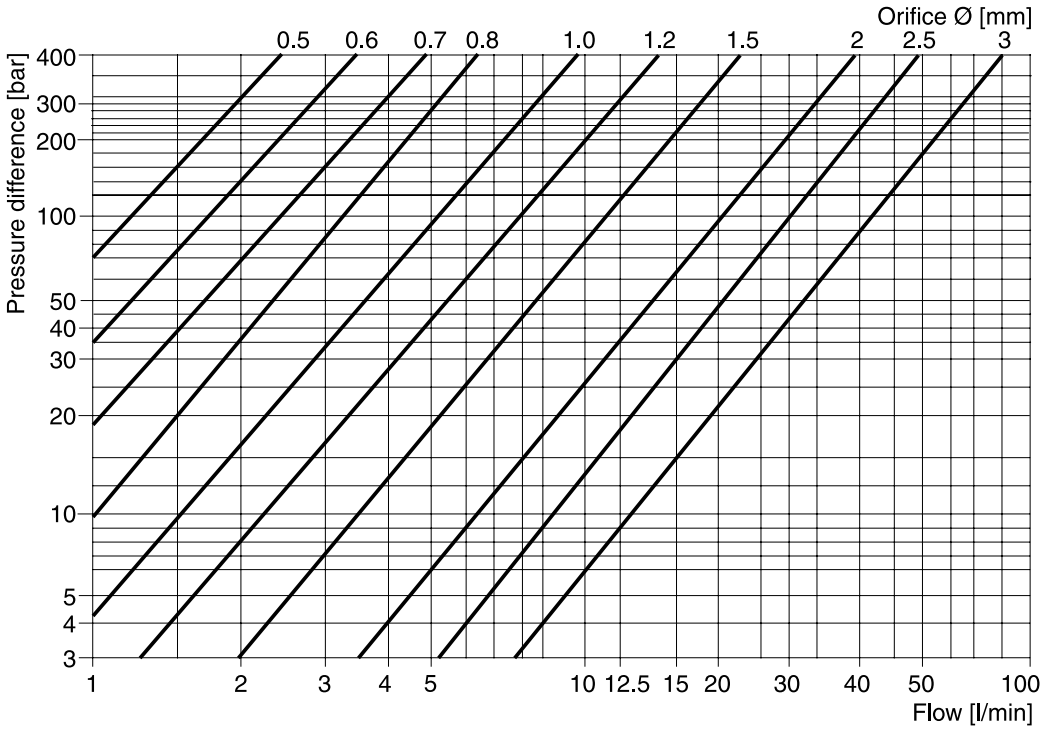

Values measured at a viscosity of 40 cST and a temperature of 50 °C.

Orifices

There are different orifices available to realize different opening / closing velocities.
The control volume of each nominal valve size can be found at the CE series.

Orifice kits, sorted by thread with different diameters

Orifice kit	Orifice kit, sorted by thread with different diameters, consisting of 2 pieces of each marked diameter												
Ø	0.0	0.8	0.9	1.0	1.1	1.2	1.3	1.5	1.8	2.0	2.2	2.5	3.0
DK-M4	•	•	•	•	•	•	•	•	–	•	–	–	–
DK-M5	•	•	•	•	•	•	•	•	–	•	–	–	–
DK-M6	•	•	•	•	•	•	•	•	–	•	–	–	–
DK-M8	•	–	–	•	–	•	–	•	•	•	•	•	–
DK-M10x1	•	–	–	•	–	•	–	•	•	•	–	•	•
DK-1/16NPT	•	•	•	•	•	•	•	•	–	•	–	–	–
DK-1/8NPT	•	–	–	•	–	•	–	•	•	•	–	•	•

Orifice kits, thread with one defined diameter 20 pcs per box

Orifice kits of one size:
Ordering Code Examples

DK-M4-08 ⇒ 20 pcs, orifice size 0.8 mm

DK-M5-10 ⇒ 20 pcs, orifice size 1.0 mm

DK-M8-12 ⇒ 20 pcs, orifice size 1.2 mm

Orifice gauge: Order no. DK-05-30

Removal CE016 to CE063

The extracting tools consist of tee bar, slide hammer, support handle, and expanding collet (fig. 1).

At first the spacer ring is removed. Next, spring and poppet are withdrawn. Finally, the expanding collet is inserted into the sleeve and braced by means of the tee bar. Using the slide hammer, collet and sleeve are extracted from the cavity.



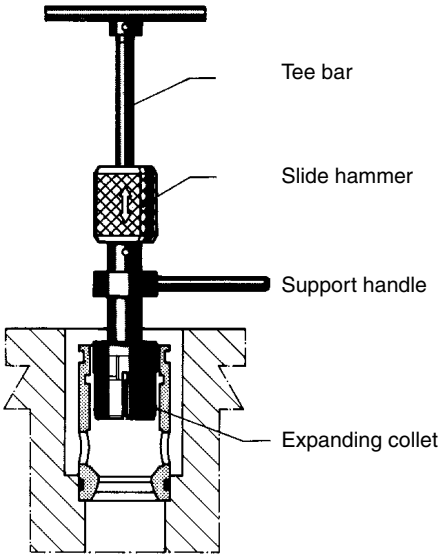

Figure 1

Ordering code

Valve size	Order no.:
CE016 *	090 4600 09779
CE025 *	090 4600 09780
CE032 *	090 4600 09781
CE040 *	090 4600 09782
CE050 *	090 4600 09783
CE063 *	090 4600 09784
CE016 to CE063 *	090 4600 09785

Removal CE080 to CE100

The extracting tools consist of spacer ring puller (fig. 4), puller (fig. 3), and puller thrust plate. At first the spacer ring is removed. Next the puller is inserted into the sleeve and aligned by the puller thrust plate. Tightening the nut then extracts the sleeve from the cavity.

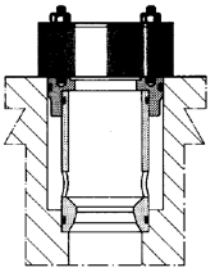

Figure 2

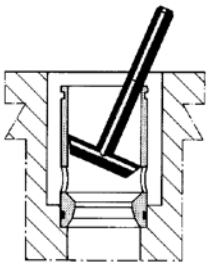

Figure 3

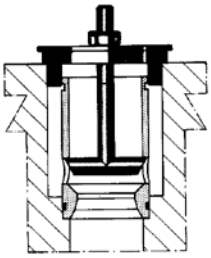

Figure 4

Ordering Code

Valve size	Order no.:
CE080	090 4600 10628
CE100	090 4600 10629

* CE/CP respectively

The pressure relief valve series R consists of a manual adjustment pilot stage and a cartridge main stage.

The pressure relief valve series RS consists of a manual adjusted pilot stage with a directional valve for an electrically controlled vent function and a cartridge main part.

The R/RS*E model codes embrace the pilot valves, covers and cartridges that are also offered as separate items. See combination examples for details.

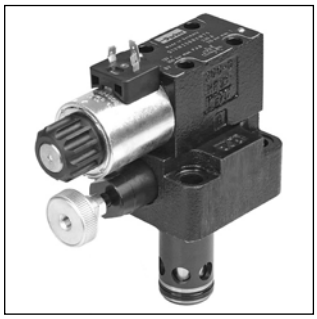

RS*E

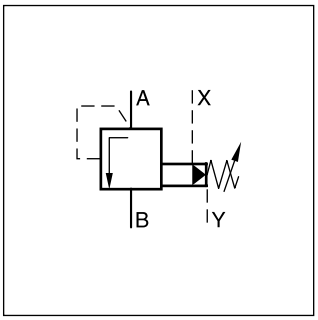

R*E

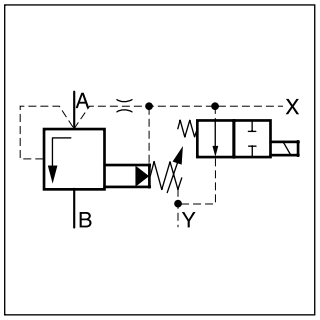

RS*E (simplified symbol)

Features

- Pilot operated with manual adjustment
- Cavity and mounting pattern according to ISO 7368
- 6 pressure stages
- 2 switching types (series RS*E)
- 3 adjustment modes
  - Hand knob
  - Acorn nut with lead seal
  - Cylinder lock
- 6 sizes, NG16 to NG63

Note

Port X only usable for remote control.

R25E

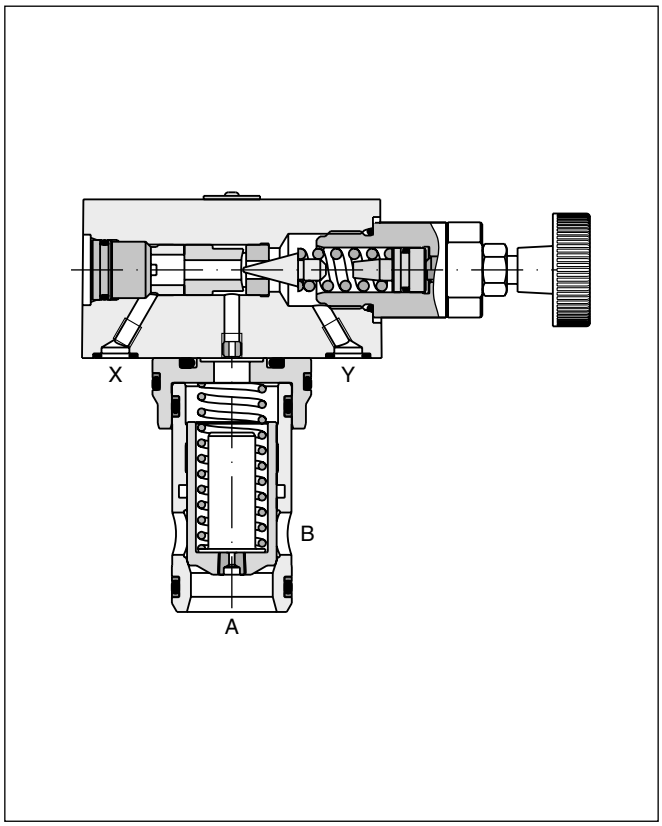

RS25E

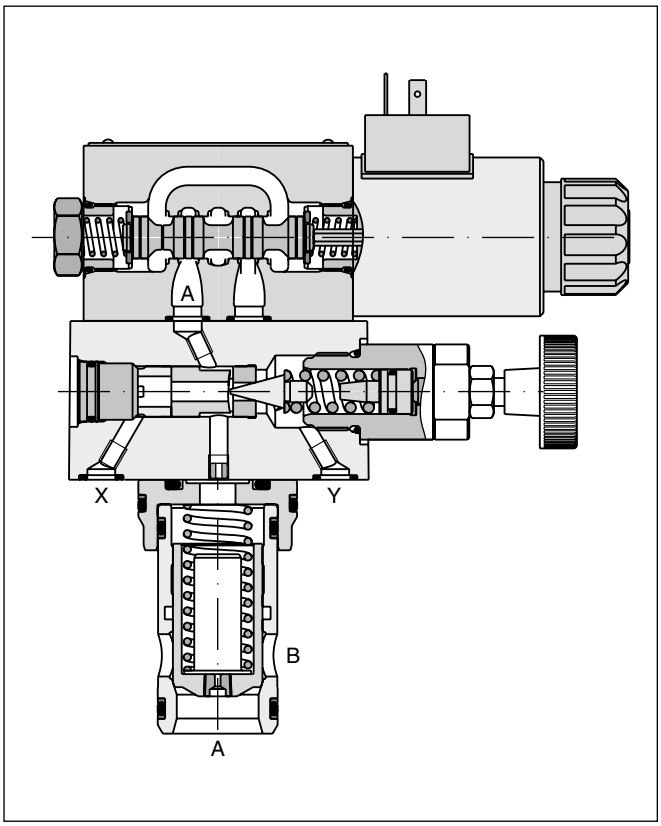

8

R*E

R		E			1	S			
Pressure relief valve	**Nominal size**	**Slip-in mounting ISO 7368**	**Pressure stages**	**Adjust-ment**	**Pilot oil** (pilot internal, drain external)	**Poppet spring**	**Seal**	**Design series** (not required for ordering)	**Spool type**

Code	Nominal size
16	NG16
25	NG25
32	NG32
40	NG40
50	NG50
63	NG63

Code	Pressure stages
07	up to 70 bar
10	up to 105 bar
17	up to 175 bar
21	up to 210 bar
25	up to 250 bar
35	up to 350 bar

Code	Spool type
omit	Standard
S07	with poppet seals

Code	Seal
N	NBR
V	FPM

Code	Adjustment
S	Hand knob (standard)
A	Acorn nut with lead seal
L	Cylinder lock

RS*E

RS		E			1	S				W			
Pressure relief valve with elec. un-loading	**Nominal size**	**Slip-in mounting ISO 7368**	**Pressure stages**	**Adjust-ment**	**Pilot oil** (pilot int., drain ext.)	**Poppet spring**	**Seal**	**Switching type**	**Solenoid**	**Without plug**	**Options**	**Design series** (not required for ordering)	**Spool type**

Code	Nominal size
16	NG16
25	NG25
32	NG32
40	NG40
50	NG50
63	NG63

Code	Pressure stages
07	up to 70 bar
10	up to 105 bar
17	up to 175 bar
21	up to 210 bar
25	up to 250 bar
35	up to 350 bar

Code	Spool type
omit	Standard
S07	with poppet seals

Code	Options
omit	Standard
S	with slow unloading

Code	Solenoid
K	12 V
J	24 V
U [1)]	98 V
G [1)]	205 V

Code	Adjustment
S	Hand knob (standard)
A	Acorn nut with lead seal
L	Cylinder lock

Code	Seal
N	NBR
V	FPM

Code	Switching type
1	Solenoid not activated, unpress. circulation
9	Solenoid activated, unpress. circulation

[1)] To be used in combination with rectifier plugs at 120 VAC / 230 VAC power supply.

R*E

General							
Nominal size		**NG16**	**NG25**	**NG32**	**NG40**	**NG50**	**NG63**
Interface		Slip-in mounting acc. ISO 7368					
Mounting position		as desired, horizontal mounting preferred					
Ambient temperature	[°C]	-20...+60					
$MTTF_D$ value	[years]	75					
Weight	[kg]	2.2	3.5	4.9	8.0	13.7	22.8
Hydraulic							
Max. operating pressure	[bar]	Ports A and X up to 350, Ports B and Y 30					
Pressure stages	[bar]	75, 105, 175, 210, 250, 350					
Nominal flow	[l/min]	220	500	950	1400	2300	4000
Fluid		Hydraulic oil according to DIN 51524					
Fluid temperature	[°C]	-20...+70 (NBR: -25...+70)					
Viscosity, permitted	[cSt] / [mm²/s]	20...400					
recommended	[cSt] / [mm²/s]	30...80					
Filtration		ISO 4406 (1999); 18/16/13					

RS*E

General							
Nominal size		**NG16**	**NG25**	**NG32**	**NG40**	**NG50**	**NG63**
Interface		Slip-in mounting acc. ISO 7368					
Mounting position		as desired, horizontal mounting preferred					
Ambient temperature	[°C]	-20...+60					
$MTTF_D$ value	[years]	75					
Weight	[kg]	2.7	5.2	6.4	9.5	15.2	24.3
Hydraulic							
Max. operating pressure	[bar]	Ports A and X 350, ports B and Y 30					
Pressure stages	[bar]	75, 105, 175, 210, 250, 350					
Nominal flow	[l/min]	220	500	950	1400	2300	4000
Fluid		Hydraulic oil according to DIN 51524					
Fluid temperature	[°C]	-20...+70 (NBR: -25...+70)					
Viscosity, permitted	[cSt] / [mm²/s]	20...400					
recommended	[cSt] / [mm²/s]	30...80					
Filtration		ISO 4406 (1999); 18/16/13					
Electrical (solenoid)							
Duty ratio		100 % ED; CAUTION: coil temperature up to 150 °C possible					
Protection class		IP65 in accordance with EN 60529 (with correctly mounted plug-in connector)					
	Code	K		J		U	G
Supply voltage	[V]	12 V =		24 V =		98 V =	205 V =
Tolerance supply voltage	[%]	±10		±10		±10	±10
Current consumption	[A]	2.72		1.29		0.33	0.13
Power consumption	[W]	32.7		31		31.9	28.2
Solenoid connection		Connector as per EN175301-803, solenoid identification as per ISO 9461					
Wiring min.	[mm²]	3 x 1.5 recommended					
Wiring length max.	[m]	50 recommended					

p/Q performance curve [1)]

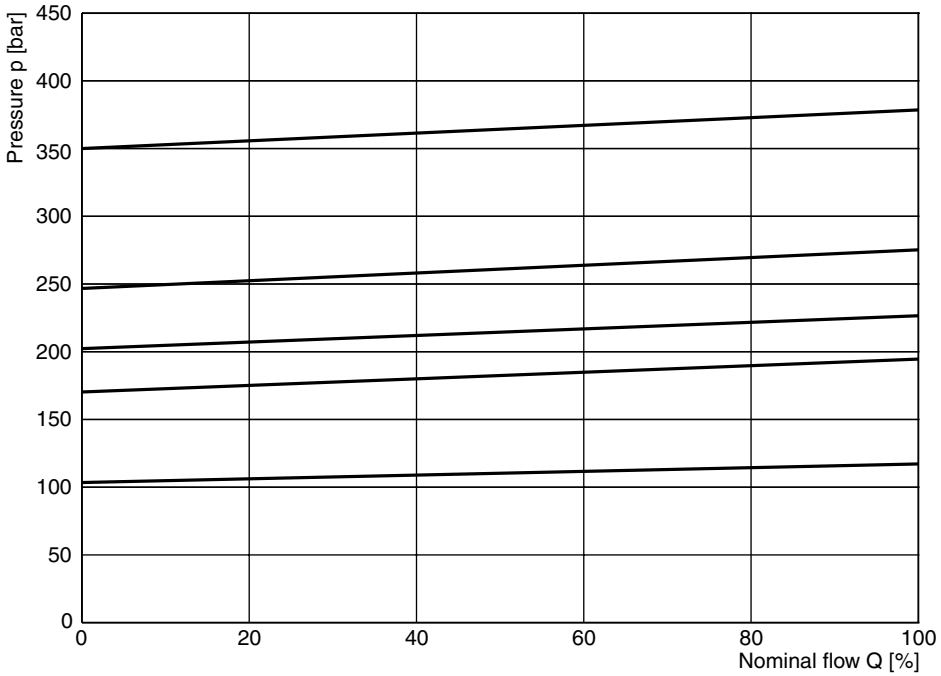

All characteristic curves measured with HLP46 at 50 °C.

8

[1)] The performance curves are measured with external drain. For internal drain the tank pressure has to be added to curve.

Dimensions R*E

NG16 - NG32

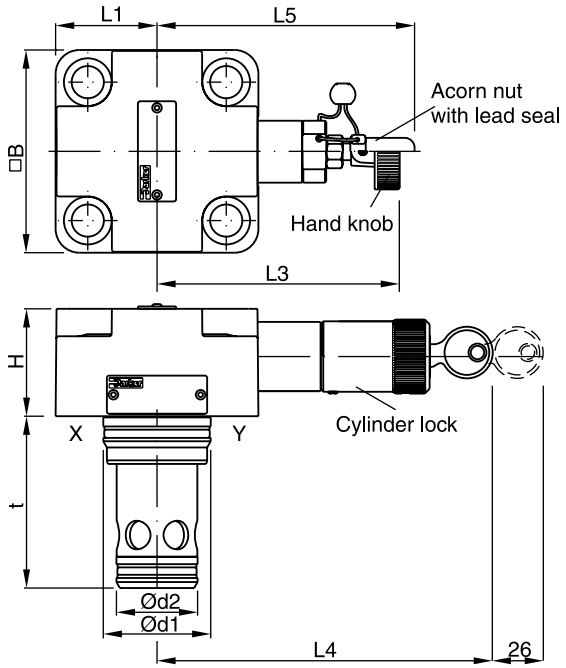

NG40 - NG63 [1)]

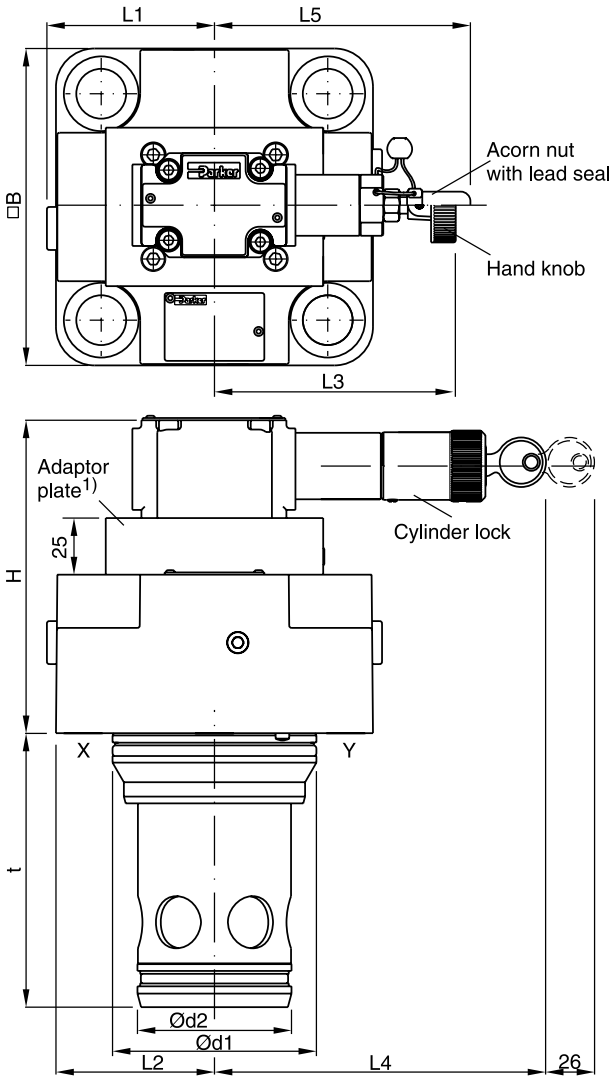

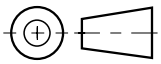

Size	H	B	L1	L2	L3	L4	L5	d1	d2	t
NG16	40	65 [2)]	32.5	–	114	125.5	117	32	25	56
NG25	47	85	42.5	–	102	114	105	45	34	71
NG32	50	102	51	–	95	106	97.5	60	45	85
NG40	106	125	62.5	66.5	106	144	110.5	75	55	105
NG50	141	140	70	74	106	144	110.5	90	68	121
NG63	155	180	90	94	106	144	110.5	120	90	155

NG	Kit	ISO 4762-12.9	[Nm]	Kit NBR	Kit FPM
16	BK414	4 x M8x40	31.8	SK-R16EN	SK-R16EV
25	BK391	4 x M12x50	108	SK-R25EN	SK-R25EV
32	BK415	4 x M16x55	264	SK-R32EN	SK-R32EV
40	BK416	4 x M20x70	517	SK-R40EN	SK-R40EV
50	BK417	4 x M20x75	517	SK-R50EN	SK-R50EV
63	BK418	4 x M30x100	1775	SK-R63EN	SK-R63EV

[1)] NG40 without adaptor plate.
[2)] Width 79 mm.

Dimensions RS*E

NG16 - NG32

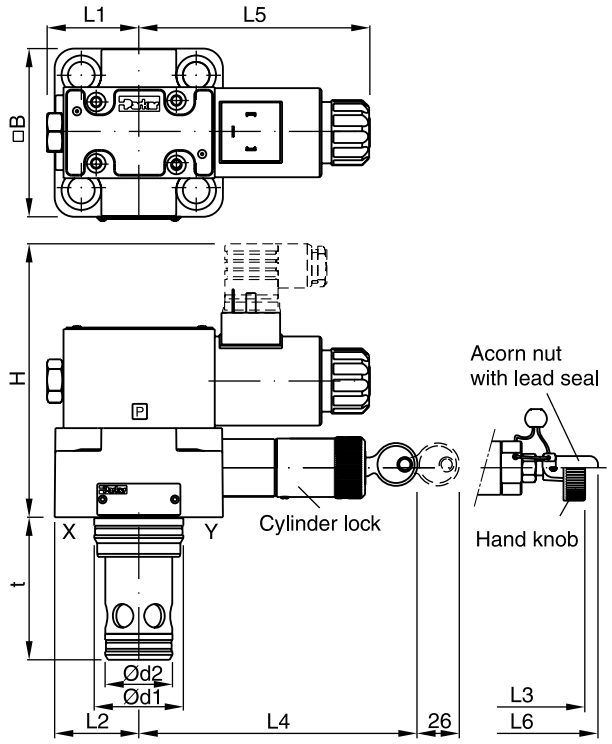

NG40 - NG63 [1)]

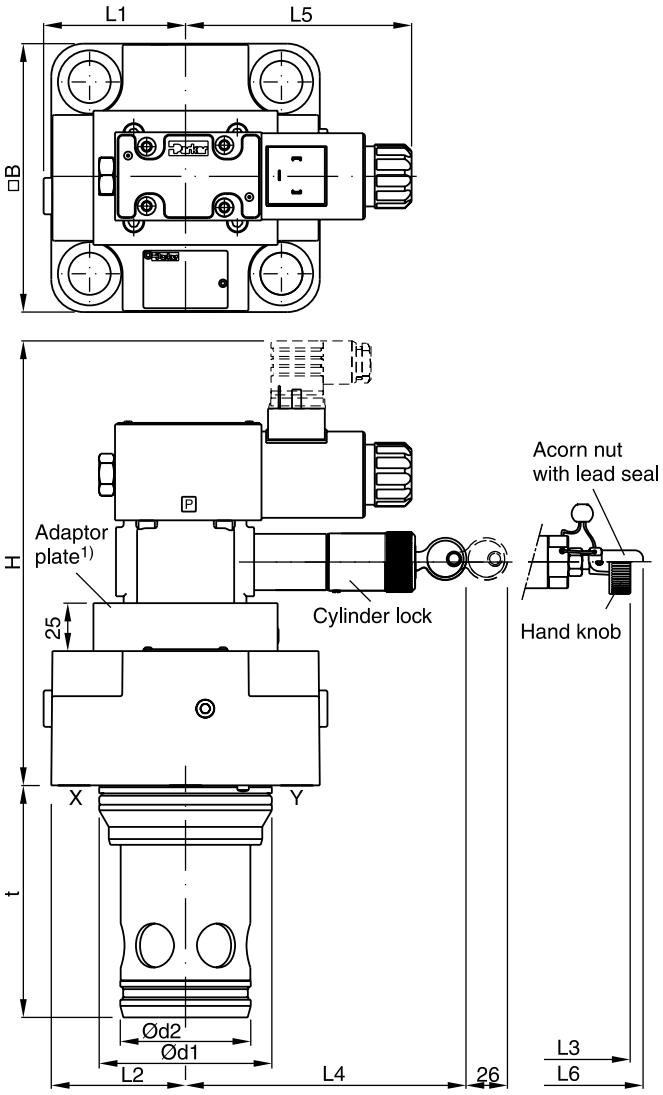

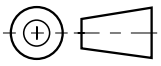

Size	H	B	L1	L2	L3	L4	L5	L6	d1	d2	t
NG16	133	65 [2)]	32.5	–	114	125.5	117	117	32	25	56
NG25	137	85	42.5	–	102	114	117	105	45	34	71
NG32	143	102	51	–	95	106	117	97.5	60	45	85
NG40	196	125	62.5	66.5	106	144	117	110.5	75	55	105
NG50	231	140	70	74	106	144	117	110.5	90	68	121
NG63	246	180	90	94	106	144	117	110.5	120	90	155

NG	Kit	ISO 4762-12.9	[Nm]	Kit NBR	Kit FPM
16	BK414	4 x M8x40	31.8	SK-RS16EN	SK-RS16EV
25	BK391	4 x M12x50	108	SK-RS25EN	SK-RS25EV
32	BK415	4 x M16x55	264	SK-RS32EN	SK-RS32EV
40	BK416	4 x M20x70	517	SK-RS40EN	SK-RS40EV
50	BK417	4 x M20x75	517	SK-RS50EN	SK-RS50EV
63	BK418	4 x M30x100	1775	SK-RS63EN	SK-RS63EV

[1)] NG40 without adaptor plate.
[2)] Width 79 mm.

The pilot operated pressure relief valves series DSDU limit the system pressure by opening the pressure port to tank. They are mostly used for accumulator pressure relief. The valve is set and sealed by the German technical monitoring association TÜV. The valve delivery includes a copy of the TÜV certificate of conformity.

Features

- TÜV certificate
- CE certification (module G) according to directive 2014/68/EU
- Installation cavity and mounting pattern according to ISO 7368
- 3 sizes, NG16 to NG32
- Remote control via port X



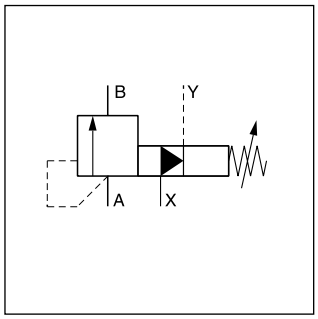

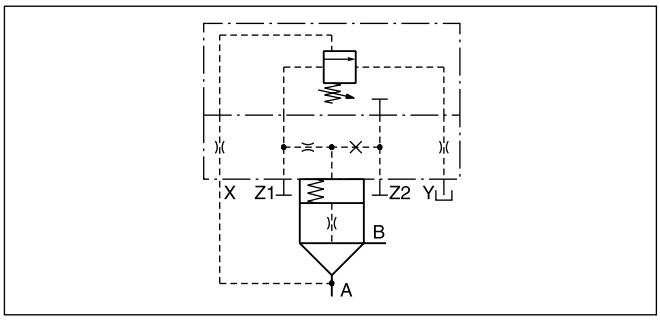

Detailed symbol

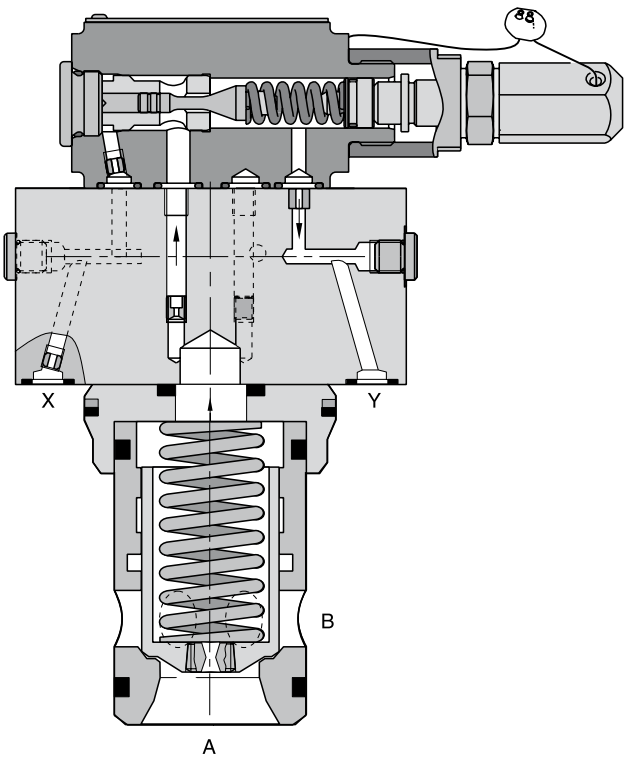

Ordering code

	DSDU			TÜV	
Seals	Pressure relief valve	Type code	Pressure stage		Desired opening pressure in bar (please specify)

Code	Seals
omit	NBR
V	FPM

Type Code			Pressure stage	Opening pressure ranges [bar]
1078 E16	1078 E25	1078 E32		
Q_{max} [l/min] depending on opening pressure				
150	215	500	B	50 - 75
165 190	235 280	550 640	E	76 - 125 126 - 175
215 230	310 355	750 800	G	176 - 200 201 - 250
255 280	390 400	900 950	K	251 - 300 301 - 350

Ordering examples

DSDU 1078 E32E - 120 bar matches Q_{max} 550 l/min, opening pressure 120 bar

DSDU 1078 E32E - 150 bar matches Q_{max} 640 l/min, opening pressure 150 bar

Technical data

General				
Size		**NG16**	**NG25**	**NG32**
Interface		Slip-in mounting according to ISO 7368		
Mounting position		as desired, horizontal mounting preferred		
Ambient temperature	[°C]	-20...+60		
$MTTF_D$ value	[years]	150		
Weight	[kg]	2.2	3.5	4.9
Hydraulic				
Max. operating pressure	[bar]	Ports A and X 350, B and Y depressurized		
Pilot oil		External / external		
Adjustment pressure	[bar]	See ordering code		
Nominal flow	[l/min]	See ordering code		
Fluid		Hydraulic oil according to DIN 51524		
Fluid temperature	[°C]	-10...+70		
Viscosity, permitted	[cSt] / [mm²/s]	20...400		
recommended	[cSt] / [mm²/s]	30...80		
Filtration		ISO 4406; 18/16/13		

p/Q curve

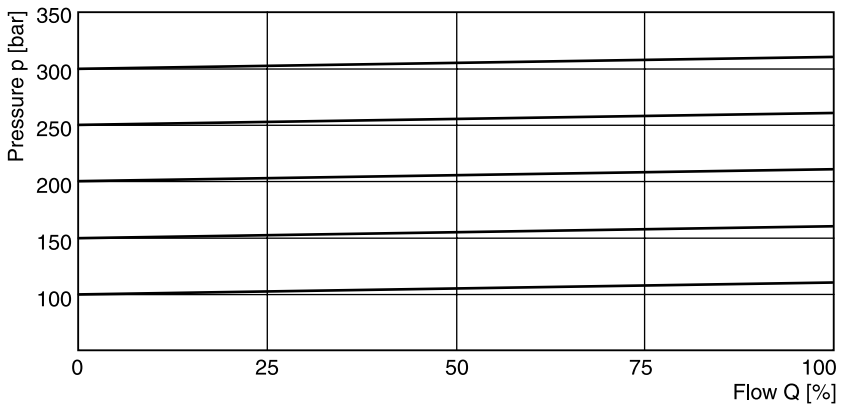

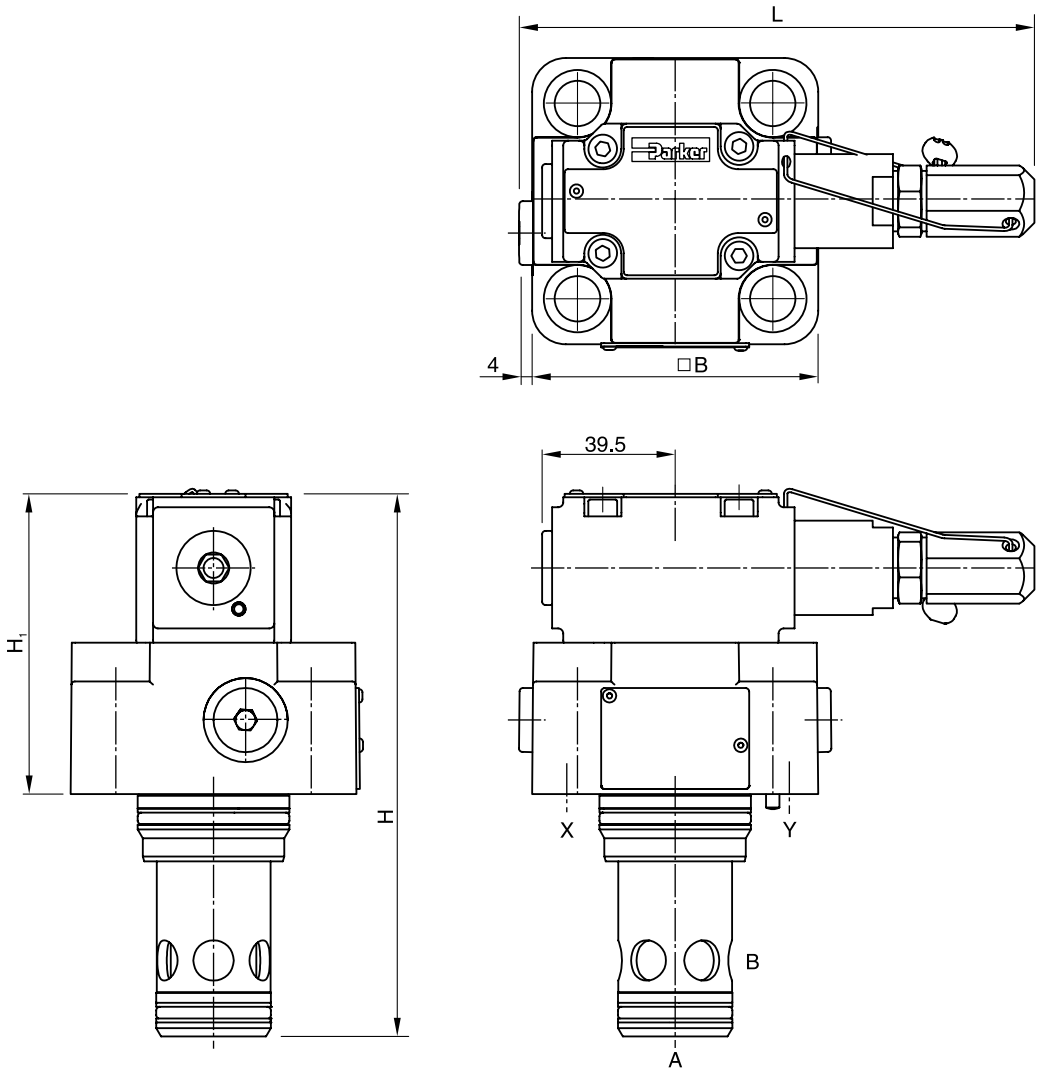

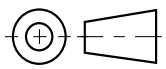

NG	H	H_1	B	L
16	141	85	79 *	162
25	162	90	85	156
32	182	97	102	162

NG	Kit	ISO 4762-12.9	[Nm]	Kit NBR	Kit FPM
16	BK414	4 x M8x40	31.8	SK-DSDU10-E16	SK-DSDU10-E16V
25	BK391	4 x M12x50	108	SK-DSDU10-E25	SK-DSDU10-E25V
32	BK415	4 x M16x55	264	SK-DSDU10-E32	SK-DSDU10-E32V

* Width 65 mm.

The proportional pressure relief valve series RE*E*W consists of a proportional pilot stage and a slip-in cartridge main stage. A mechanical maximum pressure stage is optionally available. For sizes NG25, NG32 and NG40 a screw-in cartridge is used, for sizes NG50 and NG63 an additional sandwich unit.

The RE*W model code embraces the pilot valves, covers and cartridges that are also offered as separate items. See combination examples for details.

In combination with the digital power amplifier PC-D00A-400 the valve parameters can be saved, changed and duplicated.



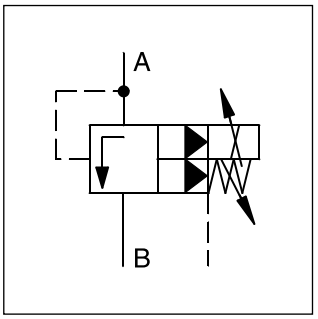

Features

- Pilot operated with proportional solenoid
- Continuous adjustment by proportional solenoid
- Optional mechanical max. pressure stage
- Cavity and mounting pattern according to ISO 7368
- 4 pressure stages
- 6 sizes, NG16 to NG63

Note

Port X only usable for remote control.

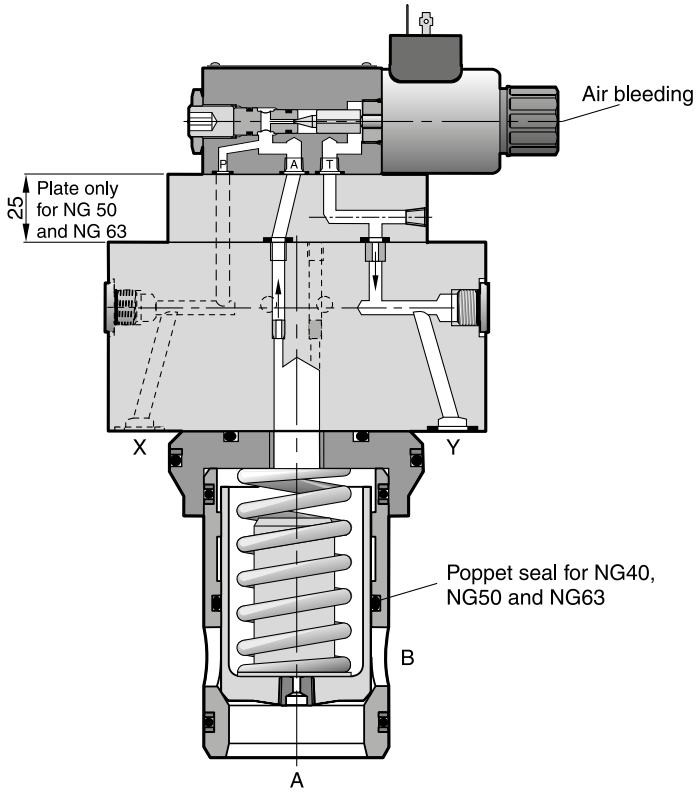

8

Ordering code

RE		E		W	1	S		1		W			
Prop. pressure relief valve	**Nominal size**	**Slip-in mounting ISO 7368**	**Pressure stages**	**Off-board electronics**	**Pilot oil** (pilot int., drain ext.)	**Poppet spring**	**Seal**	**Normally open**	**Solenoid**	**Without plug**	**Options**	**Design series**	**Spool type**

Code	Nominal size
16	NG16
25	NG25
32	NG32
40 [1)]	NG40
50 [1)]	NG50
63 [1)]	NG63

Code	Pressure stages
10	up to 105 bar
17	up to 175 bar
25	up to 250 bar
35	up to 350 bar

Code	Spool type
omit	Standard
S07	with poppet seals

Code	Options
omit	Standard
M	Mech. max. adjustment

Code	Solenoid
K	12 V, 2.1 A
X	16 V, 1.3 A

Code	Seal
N	NBR
V	FPM

[1)] With poppet seal.

8

Technical data

General							
Nominal size		**NG16**	**NG25**	**NG32**	**NG40**	**NG50**	**NG63**
Interface		Slip-in mounting acc. ISO 7368					
Mounting position		as desired, horizontal mounting preferred					
Ambient temperature	[°C]	-20...+60					
$MTTF_D$ value	[years]	75					
Weight	[kg]	2.7	5.2	6.4	9.5	15.2	24.3
Hydraulic							
Max. operating pressure	[bar]	Ports A and X 350, ports B and Y 30					
Pressure stages	[bar]	105, 175, 250, 350					
Nominal flow	[l/min]	220	500	950	1400	2300	4000
Fluid		Hydraulic oil according to DIN 51524					
Fluid temperature	[°C]	-20...+70 (NBR: -25...+70)					
Viscosity, permitted	[cSt] / [mm²/s]	20...400					
recommended	[cSt] / [mm²/s]	30...80					
Filtration		ISO 4406 (1999); 18/16/13					
Electrical (proportional solenoid)							
Duty ratio		100 % ED; CAUTION: coil temperature up to 150 °C possible					
Protection class		IP65 in accordance with EN 60529 (with correctly mounted plug-in connector)					
Code		K			X		
Supply voltage	[V]	12 V =			16 V =		
Max. current	[A]	2.1			1.3		
Coil resistance at 20 °C	[Ohm]	4.28			12		
Solenoid connection		Connector as per EN 175301-803					
Power amplifier, recommended		PCD00A-400					

Signal/pressure curve

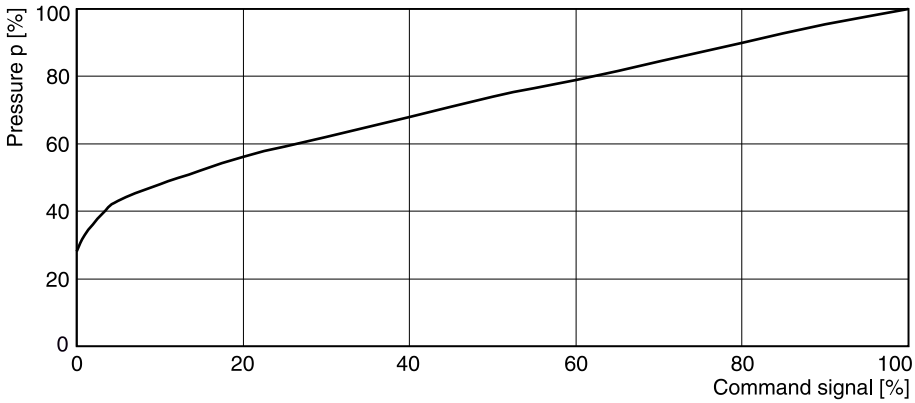

p/Q performance curve

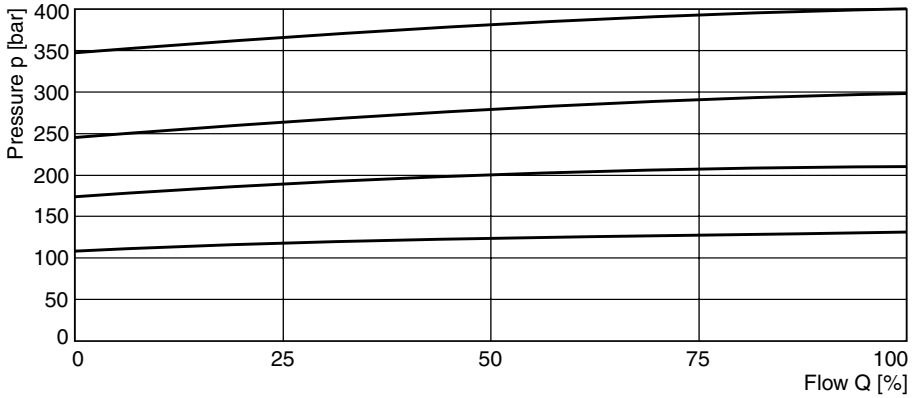

All characteristic curves measured with HLP46 at 50 °C.

The performance curves are measured with external drain. For internal drain the tank pressure has to be added to curve.

8

NG16 - NG32

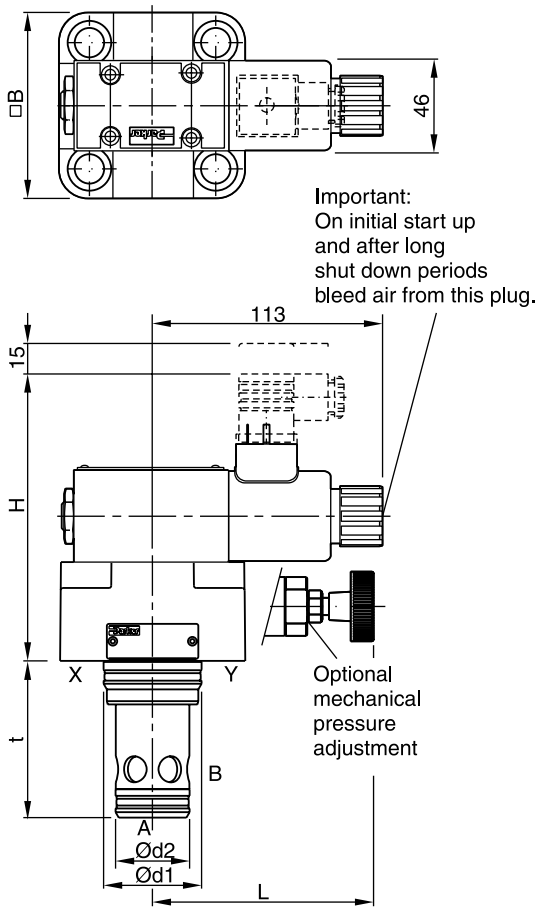

NG40 - NG63 *)

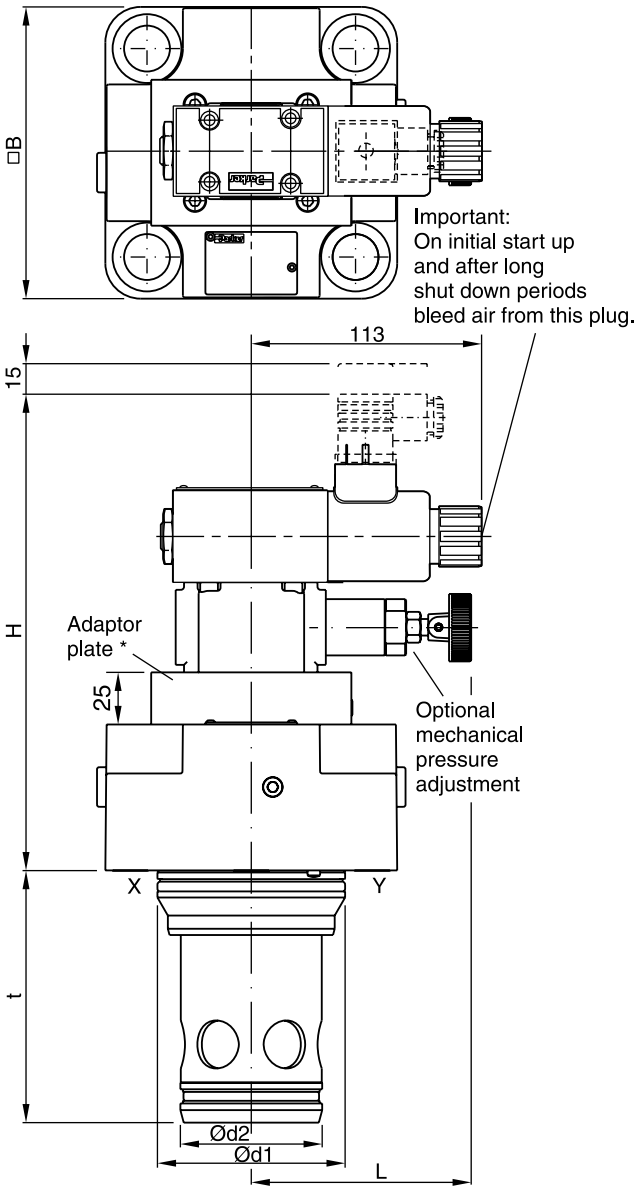

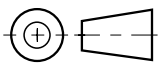

NG	H	B	d_1	d_2	t	L
16	135	79 [1]	32	25	56	114
25	140	85	45	34	72	102
32	145	102	60	45	85	95
40	137 (180.2) [2]	125	75	55	105	106
50	172 (215.2) [2]	140	90	68	122	106
63	187 (230.2) [2]	180	120	90	155	106

NG	Kit	ISO 4762-12.9	[Nm]	Kit NBR	Kit FPM
16	BK414	4 x M8x40	31.8	SK-RE16EN	SK-RE16EV
25	BK391	4 x M12x50	108	SK-RE25EN	SK-RE25EV
32	BK415	4 x M16x55	264	SK-RE32EN	SK-RE32EV
40	BK416	4 x M20x70	517	SK-RE40EN	SK-RE40EV
50	BK417	4 x M20x75	517	SK-RE50EN	SK-RE50EV
63	BK418	4 x M30x100	1775	SK-RE63EN	SK-RE63EV

* NG40 without adaptor plate.
[1] Width 65 mm.
[2] With mechanical pressure adjustment.

RE_E_W UK.INDD 10.04.19

The proportional pressure relief valves series RE*E*T with onboard electronics and a slip-in cartridge main stage is electronically based on the functionality of the digital amplifier PCD00.

The digital onboard electronics is situated in a robust metal housing and can be used in rough environments.

The nominal values of the valves are factory set. Additionally the ProPxD software permits the editing of all parameters. The software is also used for the digital electronic modules. The cable for connection to a serial RS232C interface is available as accessory.

The valves are optionally available with a mechanical maximum pressure adjustment.

The RE*E*T model code embraces the pilot valves, covers and cartridges that are also offered as separate items.



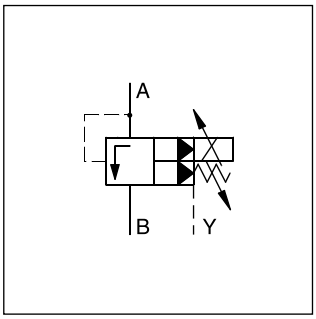

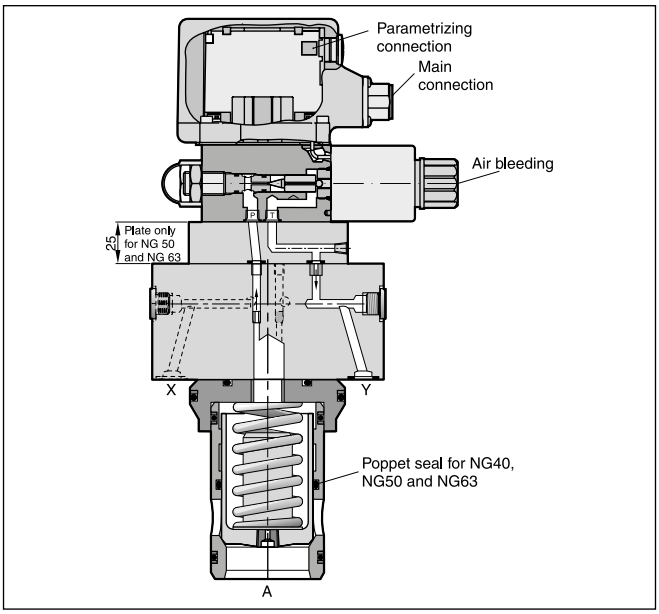

Features

- Pilot operated pressure relief valve
- Onboard electronics
- Optional mechanical max. pressure stage
- Factory setting
- Ramp time adjustment
- Linearized characteristics
- 4 pressure stages
- Cavity and mounting pattern according to ISO 7368
- 6 sizes, NG16 to NG63

Note

Port X only usable for remote control.

Ordering code

RE		E		T	1	S		1		0			
Prop. pressure relief valve with elec. unloading	**Nominal size**	**Slip-in mounting ISO 7368**	**Pressure stages**	**Onboard electronics**	**Pilot oil** (pilot int., drain ext.)	**Poppet spring**	**Seal**	**Normally open**	**Command signal**	**Electr. attach-ments**	**Options**	**Design series** (not required for ordering)	**Spool type**

Code	Nominal size
16	NG16
25	NG25
32	NG32
40 [1)]	NG40
50 [1)]	NG50
63 [1)]	NG63

Code	Pressure stages
10	up to 105 bar
17	up to 175 bar
25	up to 250 bar
35	up to 350 bar

Code	Spool type
omit	Standard
S07 [2)]	with poppet seals

Code	Options
omit	Standard
M	Mechanical max. adjustment

Code	Command signal
F	Voltage input 0...+10 V with ref. output +10 V
R	Current input 4...20 mA

Code	Seal
N	NBR
V	FPM

[1)] With poppet seal.
[2)] Not for NG16.

Please order plugs separately, item no. 5004072
Parametrizing cable OBE -> RS-232: item no. 40982923

General								
Nominal size			**NG16**	**NG25**	**NG32**	**NG40**	**NG50**	**NG63**
Interface			Slip-in mounting acc. ISO 7368					
Mounting position			as desired, horizontal mounting preferred					
Ambient temperature		[°C]	-20...+60					
$MTTF_D$ value [1]		[years]	75					
Weight		[kg]	2.7	5.2	6.4	9.5	15.2	24.3
Vibration strength		[g]	10 sinus 5...2000 Hz acc. to IEC 68-2-6 10 (RMS) noise 20...2000 Hz acc. to IEC 68-2-36 15 shock acc. to IEC 68-2-27					
Hydraulic								
Max. operating pressure		[bar]	Ports A and X 350, ports B and Y 30					
Pressure stages		[bar]	105, 175, 250, 350					
Nominal flow		[l/min]	220	500	950	1400	2300	4000
Fluid			Hydraulic oil according to DIN 51524					
Fluid temperature		[°C]	-20...+70 (NBR: -25...+70)					
Viscosity,	permitted	[cSt] / [mm²/s]	20...400					
	recommended	[cSt] / [mm²/s]	30...80					
Filtration			ISO 4406; 18/16/13					
Electrical								
Duty ratio ED		[%]	100					
Protection class			IP65 in accordance with EN 60529 (with correctly mounted plug-in connector)					
Supply voltage		VDC	18...30, ripple < 5 % eff., surge free					
Current consumption max.		[A]	2.0					
Pre-fusing		[A]	2.5 medium lag					
Potentiometer supply		[V]	+10 / ±5 % max. 10 mA					
Command signal	Code F voltage	[V]	0...+10, ripple < 0.01 % eff., surge free, Ri = 100 kOhm					
	Code R current	[mA]	4...20, ripple < 0.01 % eff., surge free, Ri = <250 Ohm < 3.6 mA = enable off, > 3.8 mA = enable on (acc. NAMUR NE43)					
Differential input voltage max.		[V]	30 for terminal D and E against PE (terminal G)					
		[V]	11 for terminal D and E against 0V (terminal B)					
Adjustment ranges	Min current	[%]	0...50					
	Max current	[%]	50...100					
	Ramp	[s]	0...32.5					
Interface			RS 232C, parametrizing connection 5-pole					
EMC			EN 61000-6-2, EN 61000-6-4					
Central connection			6 + PE acc. EN 175201-804					
Cable specification		[mm²]	7 x 1.0 overall braid shield					
Cable length max.		[m]	50					

8

[1] If valves with onboard electronics are used in safety-related parts of control systems, in case the safety function is requested, the valve electronics voltage supply is to be switched off by a suitable switching element with sufficient reliability.

Command pressure curve RE*E*T

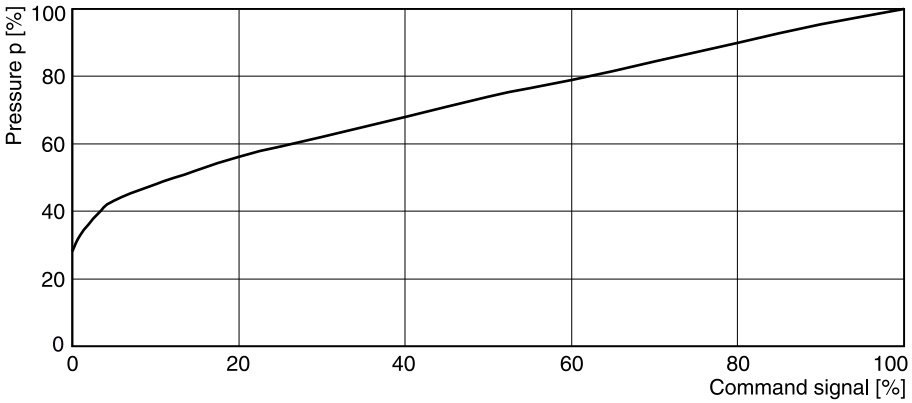

p/Q performance curve RE*E*T

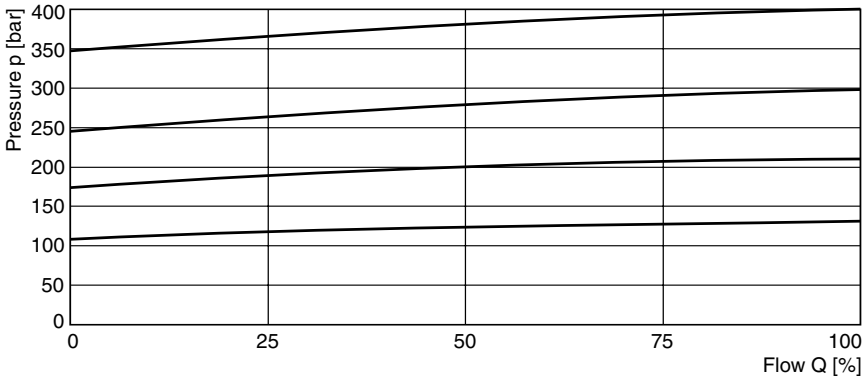

All characteristic curves measured with HLP46 at 50 °C.

The performance curves are measured with external drain. For internal drain the tank pressure has to be added to curve.

8

Block diagram

Code F
6 + PE acc. EN 175201-804

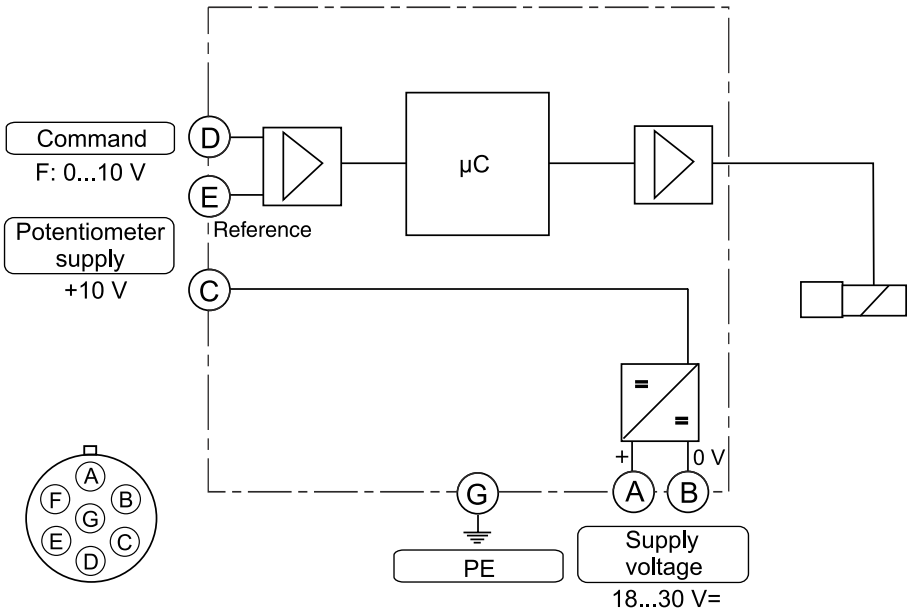

Code R
6 + PE acc. EN 175201-804

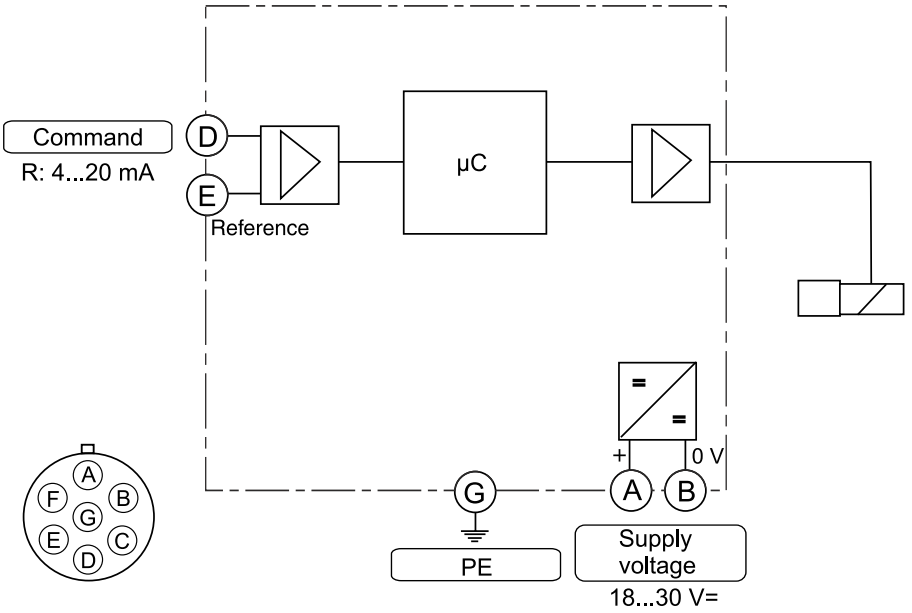

Female connector (EMC conform)

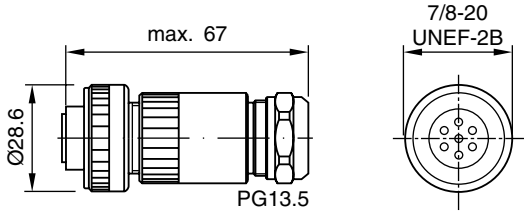

Please order plugs separately,
ID no. 5004072

ProPxD interface program

The ProPxD software permits comfortable parameter setting for the module electronics. Via the clearly arranged entry mask the parameters can be noticed and modified. Storage of complete parameter sets is possible as well as printout or record as a text file for further documentation. Stored parameter sets may be loaded anytime and transmitted to other valves. Inside the electronics a non-volatile memory stores the data with the option for recalling or modification.

The PC software can be downloaded free of charge at www.parker.com/isde – see page “Support“ or directly at www.parker.com/propxd.

Features

- Comfortable editing of all parameters
- Depiction and documentation of parameter sets
- Storage and loading of optimized parameter adjustments
- Executable with all actual Windows® operating systems from Windows® XP upwards
- Plain communication between PC and electronics via serial interface RS232C

The parametrizing cable may be ordered under item no. 40982923.

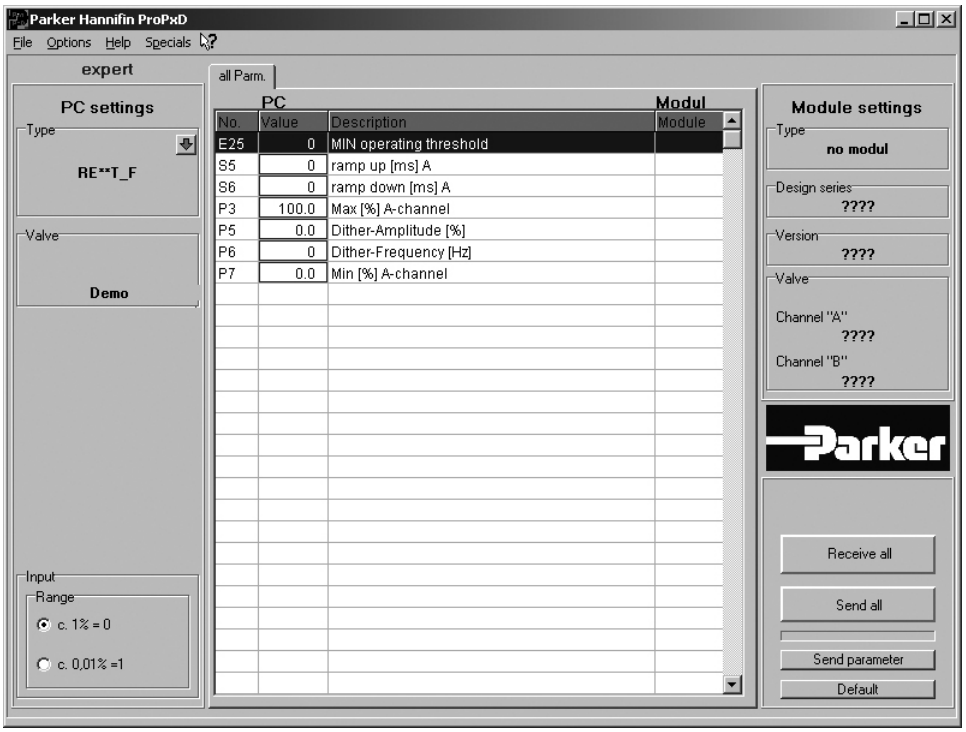

8

NG16 - NG32

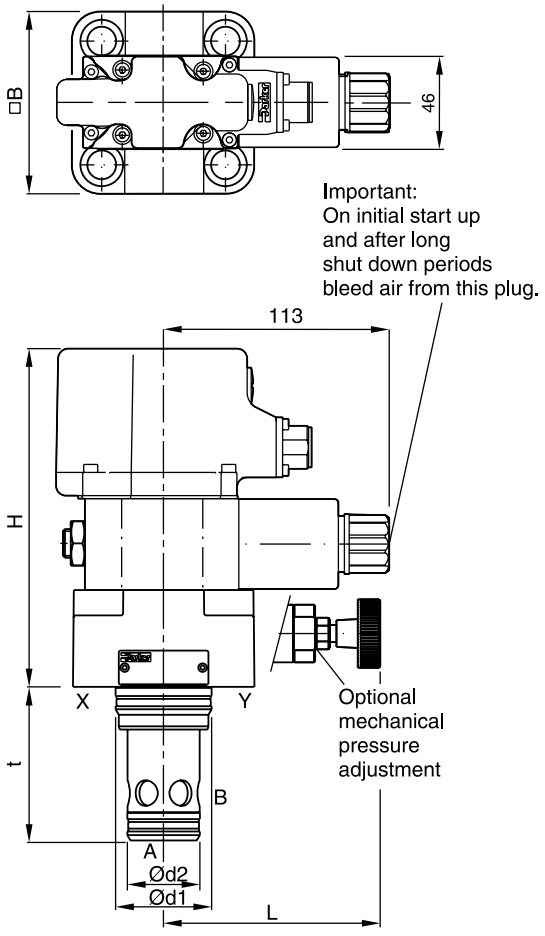

NG40 - NG63 *

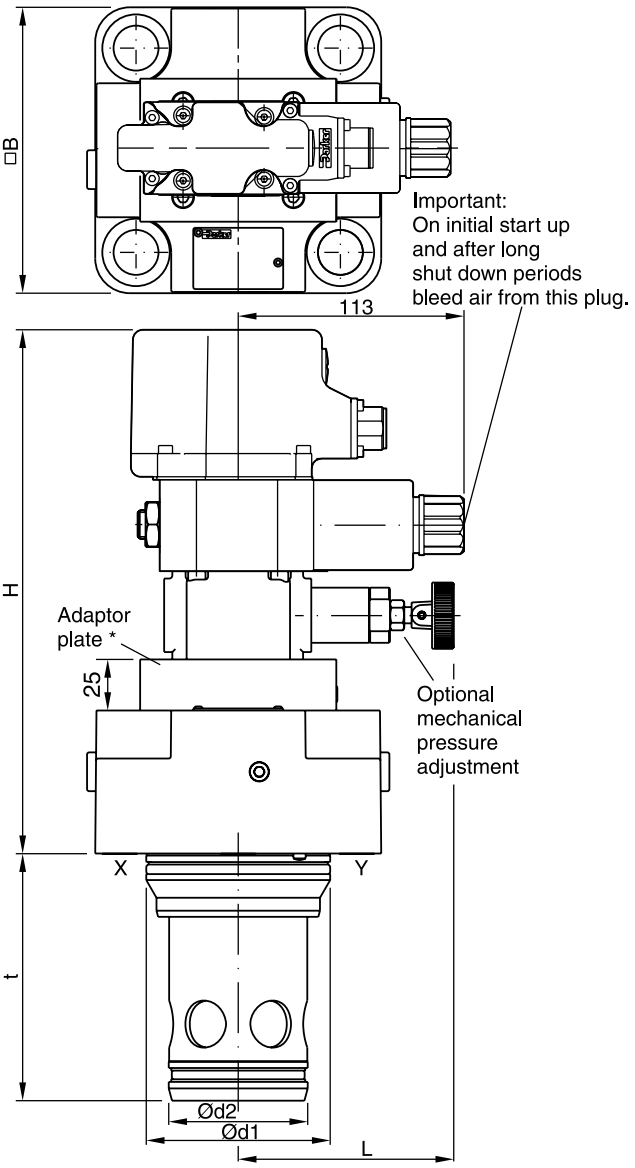

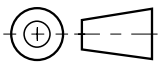

NG	H	B	d_1	d_2	t	L
16	179	79 [1]	32	25	56	114
25	124	85	45	34	72	102
32	129	102	60	45	85	95
40	139 (182.2) [2]	125	75	55	105	106
50	174 (217.2) [2]	140	90	68	122	106
63	189 (232.2) [2]	180	120	90	155	106

NG	Kit	ISO 4762-12.9	[Nm]	Kit NBR	Kit FPM
16	BK414	4 x M8x40	31.8	SK-RE16EN	SK-RE16EV
25	BK391	4 x M12x50	108	SK-RE25EN	SK-RE25EV
32	BK415	4 x M16x55	264	SK-RE32EN	SK-RE32EV
40	BK416	4 x M20x70	517	SK-RE40EN	SK-RE40EV
50	BK417	4 x M20x75	517	SK-RE50EN	SK-RE50EV
63	BK418	4 x M30x100	1775	SK-RE63EN	SK-RE63EV

* NG40 without adaptor plate.
[1] Width 65 mm.
[2] With mechanical pressure adjustment.

RE_E_T UK.INDD 10.04.19

Unloading valves series UR*E consist of a mechanical pilot stage and a slip-in cartridge main stage. These valves are used to unload a circuit at low pressure. The mechanically adjustable pressure signal to unload the main stage has to be applied to port X. The nominal pressure differential between opening and closing is 15 %.

In addition the series US*E is vented by electrical operation. The UR*E/US*E model codes embrace the pilot valves, covers and cartridges that are also offered as separate items. See combination examples for details.



US25E

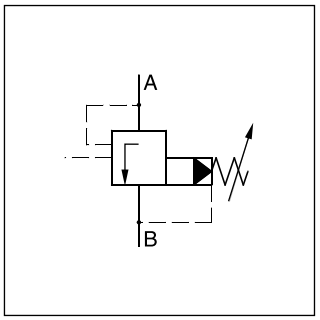

UR*E

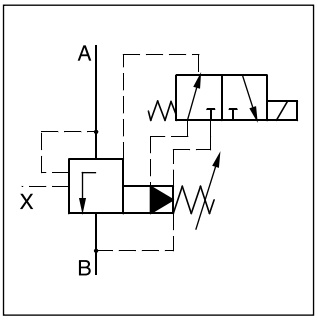

US*E

Features

- Pilot operated unloading valve
- Cavity and mounting pattern according to ISO 7368
- 4 pressure stages
- 2 switching types (series US*E)
- 3 adjustment modes
  - Hand knob
  - Acorn nut with lead seal
  - Cylinder lock
- 6 sizes NG16 to NG63

Note

Port X only usable for remote vent function

UR*E

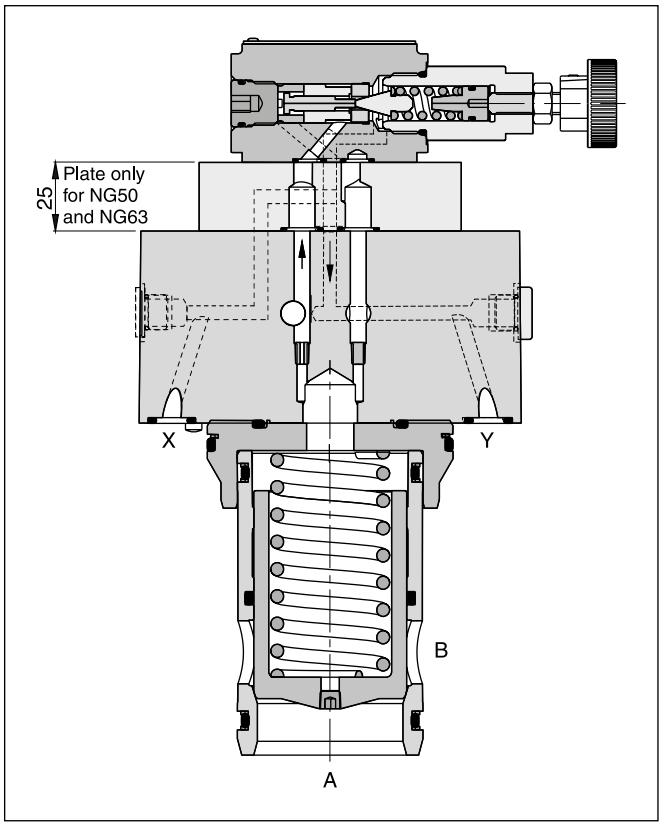

US*E

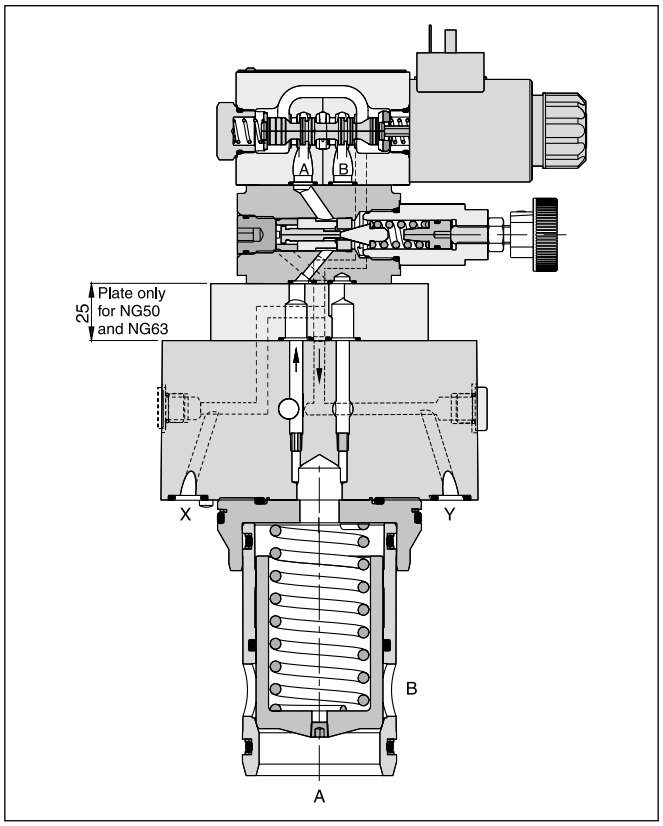

8

UR*E

UR		E			1	S		
Unloading valve	**Nominal size**	**Slip-in mounting ISO 7368**	**Pressure stages**	**Adjust-ment**	**Pilot oil** (pilot internal, drain external)	**Poppet spring**	**Seal**	**Design series** (not required for ordering)

Code	Nominal size
16	NG16
25	NG25
32	NG32
40	NG40
50	NG50
63	NG63

Code	Seal
N	NBR
V	FPM

Code	Adjustment
S	Hand knob (standard)
A	Acorn nut with lead seal
L	Cylinder lock

Code	Pressure stages
07	up to 70 bar
17	up to 175 bar
25	up to 250 bar
35	up to 350 bar

US*E

US		E			1	S					W		
Unloading valve with elec. un-loading	**Nominal size**	**Slip-in mounting ISO 7368**	**Pressure stages**	**Adjust-ment**	**Pilot oil** (pilot int., drain ext.)	**Poppet spring**	**Seal**	**Switching type**	**Solenoid**	**Without plug**	**Options**	**Design series** (not required for ordering)

Code	Nominal size
16	NG16
25	NG25
32	NG32
40	NG40
50	NG50
63	NG63

Code	Spool type
omit	Standard
S	with slow unloading

Code	Solenoid
K	12 V
J	24 V
U [1)]	98 V
G [1)]	205 V

Code	Pressure stages
07	up to 70 bar
17	up to 175 bar
25	up to 250 bar
35	up to 350 bar

Code	Switching type
1	Solenoid not activated, unpress. circulation
9	Solenoid activated, unpress. circulation

Code	Adjustment
S	Hand knob (standard)
A	Acorn nut with lead seal
L	Cylinder lock

Code	Seal
N	NBR
V	FPM

[1)] To be used in combination with rectifier plugs at 120 VAC / 230 VAC power supply.

UR*E

General							
Nominal size		**NG16**	**NG25**	**NG32**	**NG40**	**NG50**	**NG63**
Interface		Slip-in mounting acc. ISO 7368					
Mounting position		as desired, horizontal mounting preferred					
Ambient temperature	[°C]	-20...+60					
$MTTF_D$ value	[years]	75					
Weight	[kg]	2.2	3.5	4.9	8.0	13.7	22.8
Hydraulic							
Max. operating pressure	[bar]	Ports A and X up to 350, Ports B and Y 30					
Pressure stages	[bar]	75, 175, 250, 350					
Pressure differential, nominal	[%]	15					
Nominal flow	[l/min]	220	500	950	1400	2300	4000
Fluid		Hydraulic oil according to DIN 51524					
Fluid temperature	[°C]	-20...+70 (NBR: -25...+70)					
Viscosity, permitted	[cSt] / [mm²/s]	20...400					
recommended	[cSt] / [mm²/s]	30...80					
Filtration		ISO 4406 (1999); 18/16/13					

US*E

General							
Nominal size		**NG16**	**NG25**	**NG32**	**NG40**	**NG50**	**NG63**
Interface		Slip-in mounting acc. ISO 7368					
Mounting position		as desired, horizontal mounting preferred					
Ambient temperature	[°C]	-20...+60					
$MTTF_D$ value	[years]	75					
Weight	[kg]	2.7	5.2	6.4	9.5	15.2	24.3
Hydraulic							
Max. operating pressure	[bar]	Ports A and X 350, ports B and Y 30					
Pressure stages	[bar]	75, 175, 250, 350					
Pressure differential, nominal	[%]	15					
Nominal flow	[l/min]	220	500	950	1400	2300	4000
Fluid		Hydraulic oil according to DIN 51524					
Fluid temperature	[°C]	-20...+70 (NBR: -25...+70)					
Viscosity, permitted	[cSt] / [mm²/s]	20...400					
recommended	[cSt] / [mm²/s]	30...80					
Filtration		ISO 4406 (1999); 18/16/13					
Electrical (solenoid)							
Duty ratio		100 % ED; CAUTION: coil temperature up to 150 °C possible					
Protection class		IP65 in accordance with EN 60529 (with correctly mounted plug-in connector)					
	Code	K	J	U	G		
Supply voltage	[V]	12 V =	24 V =	98 V =	205 V =		
Tolerance supply voltage	[%]	±10	±10	±10	±10		
Current consumption	[A]	2.72	1.29	0.33	0.13		
Power consumption	[W]	32.7	31	31.9	28.2		
Solenoid connection		Connector as per EN175301-803, solenoid identification as per ISO 9461					
Wiring min.	[mm²]	3 x 1.5 recommended					
Wiring length max.	[m]	50 recommended					

8

p/Q performance curve [1)]

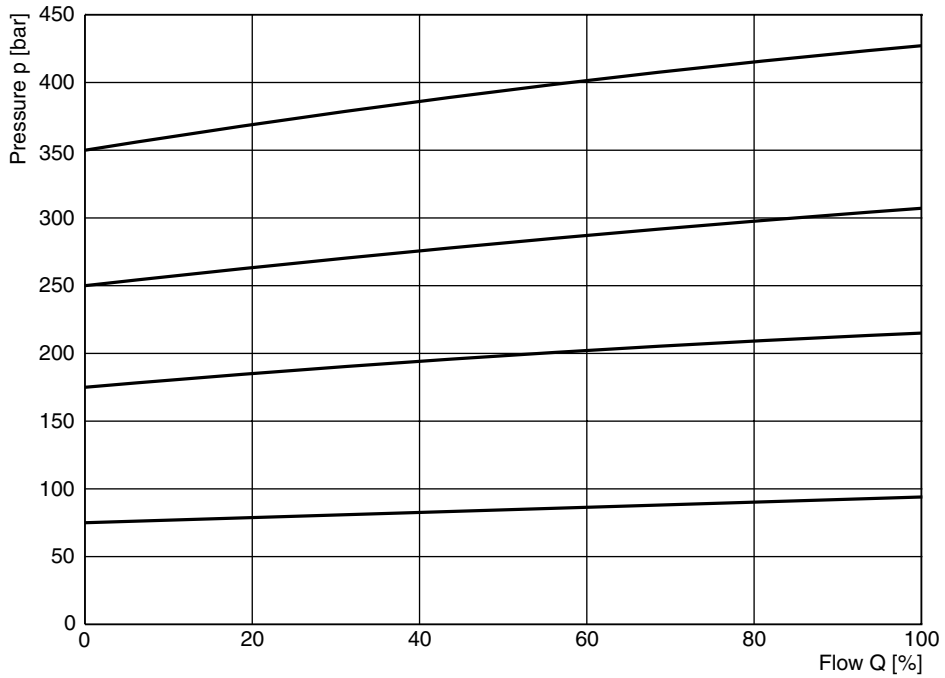

All characteristic curves measured with HLP46 at 50 °C.

8

[1)] The performance curves are measured with external drain.
For internal drain the tank pressure has to be added to curve.

Dimensions UR*E

NG16 to NG32

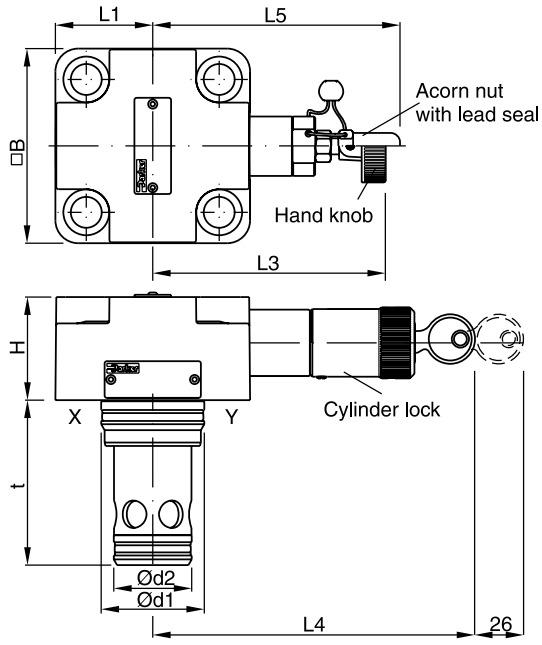

NG40 to NG63 [1)]

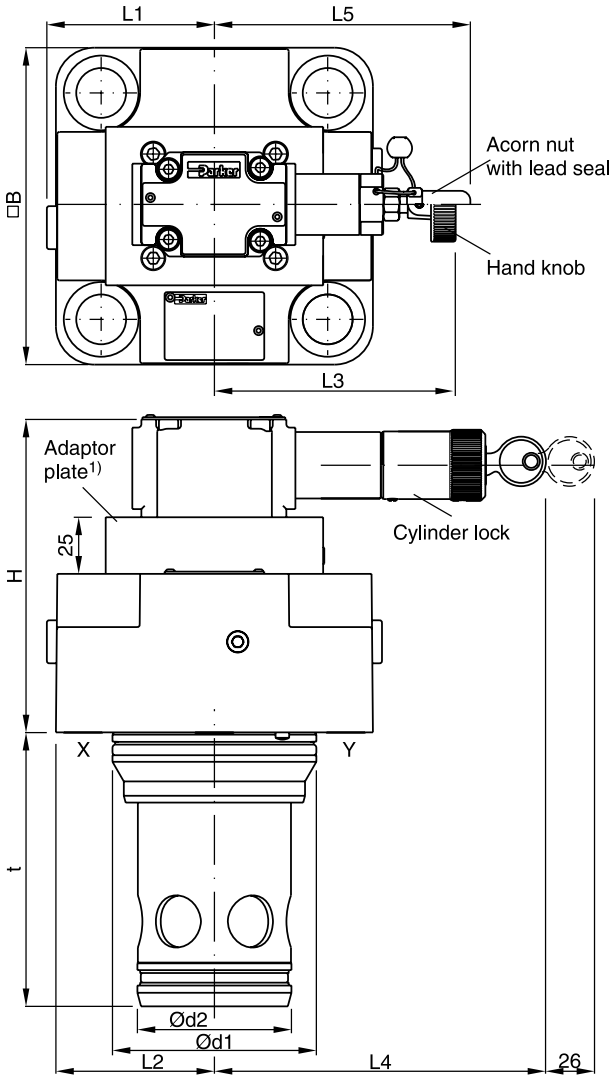

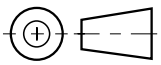

NG	H	B	L1	L2	L3	L4	L5	d1	d2	t
16	40	65 [2)]	32.5	—	114	152	117	32	25	56
25	47	85	42.5	—	102	139	106	45	34	71
32	50	102	51	—	95	131	97.5	60	45	85
40	106	125	62.5	66.5	106	144	108	75	55	105
50	141	140	70	74	106	144	108	90	68	121
63	155	180	90	94	106	144	108	120	90	155

NG	Kit	ISO 4762-12.9	[Nm]	Kit NBR	Kit FPM
16	BK414	4 x M8x40	31.8	SK-R16EN	SK-R16EV
25	BK391	4 x M12x50	108	SK-R25EN	SK-R25EV
32	BK415	4 x M16x55	264	SK-R32EN	SK-R32EV
40	BK416	4 x M20x70	517	SK-R40EN	SK-R40EV
50	BK417	4 x M20x75	517	SK-R50EN	SK-R50EV
63	BK418	4x M30x100	1775	SK-R63EN	SK-R63EV

[1)] NG40 without adaptor plate.
[2)] Width 79 mm.

Dimensions US*E

NG16 to NG32

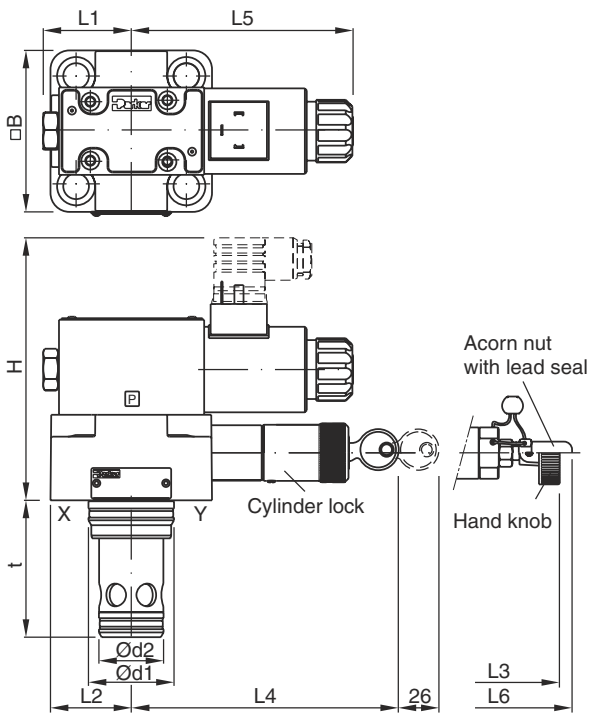

NG40 to NG63 [1)]

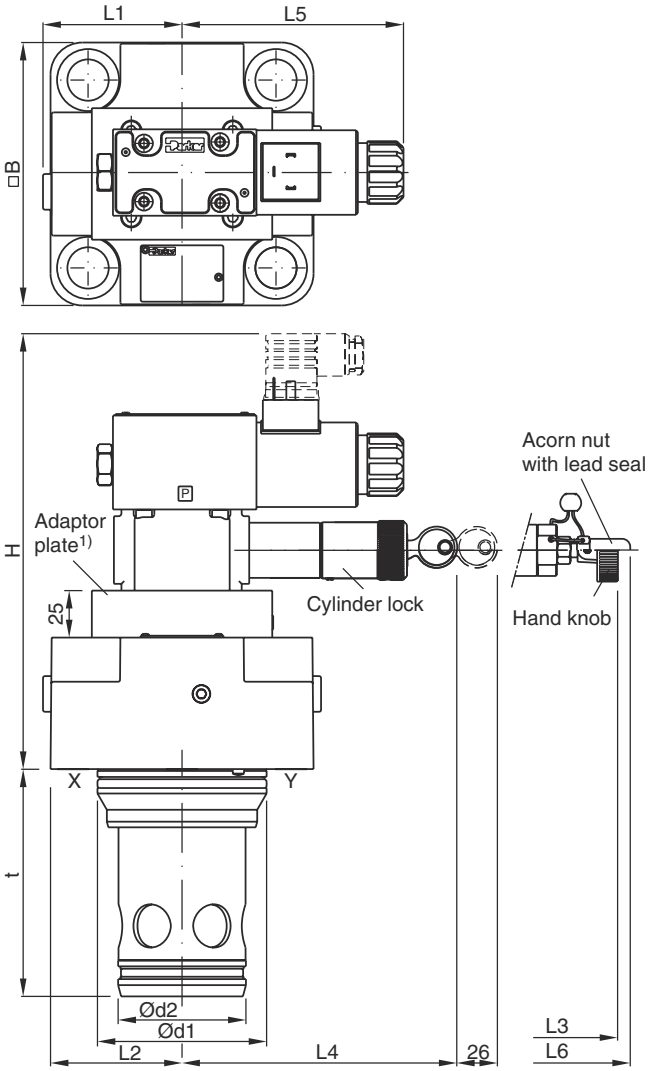

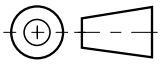

NG	H	B	L1	L2	L3	L4	L5	L6	d1	d2	t
16	40	65 [2)]	32	32.5	114	152	127.5	117	32	25	56
25	47	85	46	42.5	102	139	117	106	45	34	71
32	50	102	51	51	95	131	112.5	97.5	60	45	85
40	106	125	66	62.5	106	144	114	108	75	55	105
50	141	140	74	70	106	144	114	108	90	68	121
63	155	180	94	90	106	144	114	108	120	90	155

NG	Kit	ISO 4762-12.9	[Nm]	Kit NBR	Kit FPM
16	BK414	4 x M8x40	31.8	SK-RS16EN	SK-RS16EV
25	BK391	4 x M12x50	108	SK-RS25EN	SK-RS25EV
32	BK415	4 x M16x55	264	SK-RS32EN	SK-RS32EV
40	BK416	4 x M20x70	517	SK-RS40EN	SK-RS40EV
50	BK417	4 x M20x75	517	SK-RS50EN	SK-RS50EV
63	BK418	4 x M30x100	1775	SK-RS63EN	SK-RS63EV

[1)] NG40 without adaptor plate.
[2)] Width 79 mm.

Pressure relief valve with cover with integrated pressure relief function

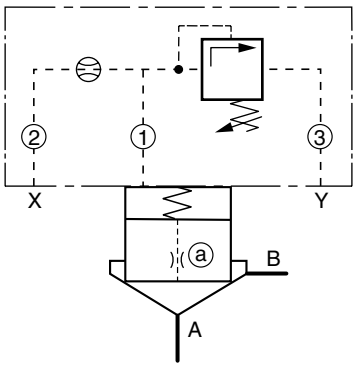

NG16 - NG32

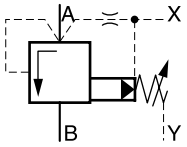

Description	Type NG16	NG25	NG32
Cover incl. pressure valve [1]	C016Fxxxxxxxxxx	C025Fxxxxxxxxxx	C032Fxxxxxxxxxx
Cover orifice ①	M5xØ1.0	M5xØ1.1	M6xØ1.2
Cover orifice ②	M4xØ0.8	M5xØ0.9	M6xØ1.0
Cover orifice ③	M5xØ99	M5xØ99	M6xØ99
Cartridge [2]	CP016C07S00X	CP025C07S00X	CP032C07S00X
Poppet orifice ⓐ	1/16NPT x Ø0.9	1/16NPT x Ø1.1	1/16NPT x Ø1.2
Spring		1.6 bar, typ S	
Volume reduction	45036578	45036579	45036580
Bolt kit cover	BK414, 4x M8x40	BK391, 4x M12x50	BK415, 4x M16x55

8

[1] Complete type see ordering code C*F.
[2] Complete type see ordering code CP*.

Shown orifice Ø and springs are recommendations.
xxØ00 = plug
xxØ99 = open

Pressure relief valve with separate pilot

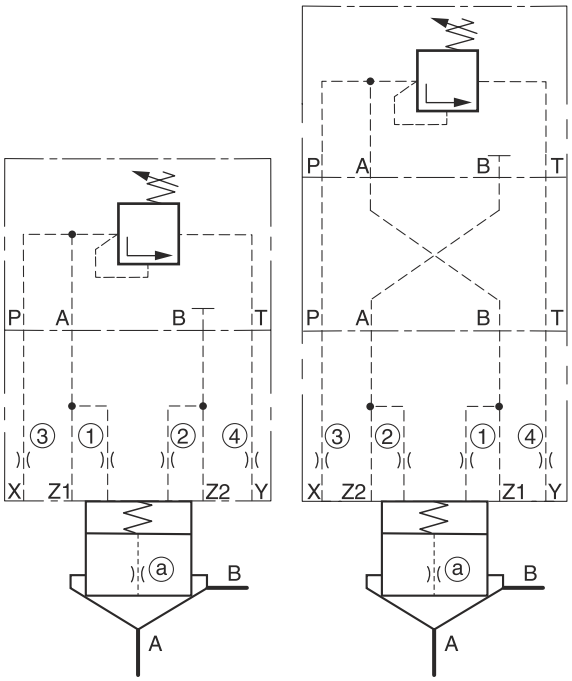

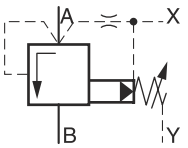

8

Adaptor plates see chapter 12

Description	Type NG16	NG25	NG32	NG40	NG50	NG63
Pressure valve [1]	R06Mxxx4x					
Adaptor plate [2]	without				PADA1007/A-B/B-A	
Cover [3]	C016CA*	C025CA*	C032CA*	C040CA*	C050CA*	C063CA*
Cover orifice ①	M5xØ1.1	M5xØ1.3	M5xØ1.4	M5xØ1.5	M6xØ1.6	M6xØ1.7
Cover orifice ②	M5xØ00				M6xØ00	
Cover orifice ③	M5xØ99	M6xØ99			M8xØ99	
Cover orifice ④	M5xØ1.3	M6xØ1.5	M6xØ1.7	M6xØ1.8	M8xØ2.0	M8xØ2.2
Cartridge [4]	CP016C07*	CP025C07*	CP032C07*	CP040C07*	CP050C07*	CP063C07*
Poppet orifice ⓐ	1/16NPT x Ø0.9	1/16NPT x Ø1.1	1/16NPT x Ø1.2	1/16NPT x Ø1.3	1/16NPT x Ø1.4	1/16NPT x Ø1.5
Spring	1.6 bar, type S					
Volume reduction	45036578	45036579	45036580	45036581	45036582	45036583
Bolt kit cover	BK414, 4x M8x40	BK391, 4x M12x50	BK415, 4x M16x55	BK416, 4x M20x70	BK417, 4x M20x75	BK418, 4x M30x100
Bolt kit pilot	BK443, 4x M5x45					

[1] Complete type see pilot valves.
[2] Included O-rings and mounting bolts.
[3] Complete type see ordering code C*C.
[4] Complete type see ordering code CP*.

Shown orifice Ø and springs are recommendations.
xxØ00 = plug
xxØ99 = open

Pressure relief valve with electrical vent function, normally open and cover with integrated pressure relief function

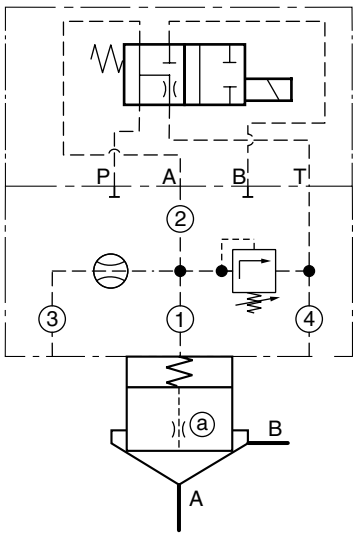

NG16 - NG32

Flow A → B

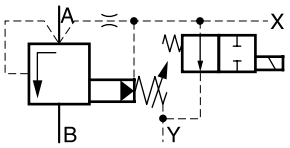

8

Description	Type NG16	NG25	NG32
4/2 DC valve [1]		D1VW104K*	
Cover incl. pressure valve [2]	C016Gxxxxxxxxx	C025Gxxxxxxxxx	C032Gxxxxxxxxx
Cover orifice ①	M5xØ1.0	M5xØ1.1	M6xØ1.2
Cover orifice ②	M5xØ99	M5xØ99	M6xØ99
Cover orifice ③	M4xØ00	M5xØ00	M6xØ00
Cover orifice ④	M5xØ1.2	M5xØ1.3	M6xØ1.4
Cartridge [3]	CP016C07*	CP025C07*	CP032C07*
Poppet orifice ⓐ	1/16NPT x Ø0.8	1/16NPT x Ø0.8	1/16NPT x Ø1.0
Spring		1.6 bar, type S	
Volume reduction	45036578	45036579	45036580
Bolt kit cover	BK414, 4x M8x40	BK391, 4x M12x50	BK415, 4x M16x55
Bolt kit 4/2 DC valve		BK375, 4x M5x30	

[1] Complete type see chapter “Directional Control Valves“, series D1VW.
[2] Complete type see ordering code C*G.
[3] Complete type see ordering code CP*.

Shown orifice Ø and springs are recommendations.
xxØ00 = plug
xxØ99 = open

Examples pressure.INDD 10.04.19

Pressure relief valve with electrical vent function, normally open and pilot in sandwich design

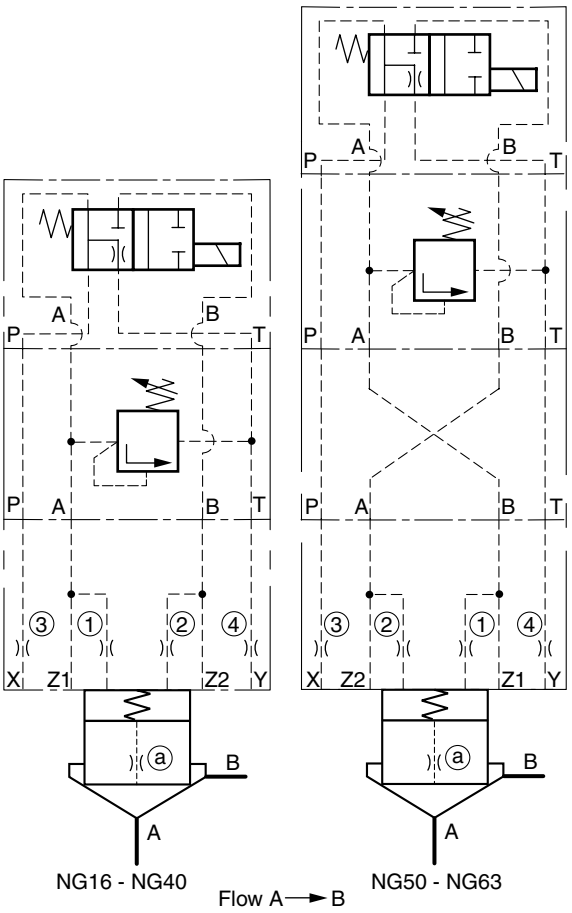

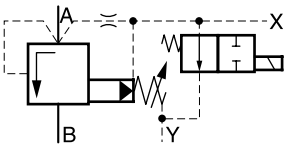

8

Adaptor plates see chapter 12

Description	Type					
	NG16	NG25	NG32	NG40	NG50	NG63
4/2 DC valve [1]	D1VW104K*					
Pressure valve [2]	V-ZUDB1ATxZ07x					
Adaptor plate NG10-NG06 [3]	without				PADA1007/A-B/B-A	
Cover [4]	C016CA*	C025CA*	C032CA*	C040CA*	C050CA*	C063CA*
Cover orifice ①	M5xØ1.1	M5xØ1.3	M5xØ1.4	M5xØ1.5	M6xØ1.6	M6xØ1.7
Cover orifice ②	M5xØ00				M6xØ00	
Cover orifice ③	M5xØ99	M6xØ99			M8xØ99	
Cover orifice ④	M5xØ1.3	M6xØ1.5	M6xØ1.5	M6xØ1.8	M8xØ2.0	M8xØ2.2
Cartridge [5]	CP016C07*	CP025C07*	CP032C07*	CP040C07*	CP050C07*	CP063C07*
Poppet orifice ⓐ	1/16NPT x Ø0.9	1/16NPT x Ø1.1	1/16NPT x Ø1.2	1/16NPT x Ø1.3	1/16NPT x Ø1.4	1/16NPT x Ø1.5
Spring	1.6 bar, type S					
Volume reduction	45036578	45036579	45036580	45036581	45036582	45036583
Bolt kit cover	BK414, 4x M8x40	BK391, 4x M12x50	BK415, 4x M16x55	BK416, 4x M20x70	BK417, 4x M20x75	BK418, 4x M30x100
Bolt kit pilot	TK1482					

[1] Complete type see chapter “Directional Control Valves“, series D1VW.
[2] Complete types see pilot valves.
[3] Included O-rings and mounting bolts.
[4] Complete type see ordering code C*C.
[5] Complete type see ordering code CP*.

Shown orifice Ø and springs are recommendations.
xxØ00 = plug
xxØ99 = open

Examples pressure.INDD 10.04.19

Pressure relief valve with electrical vent function, normally closed and cover with integrated pressure relief function

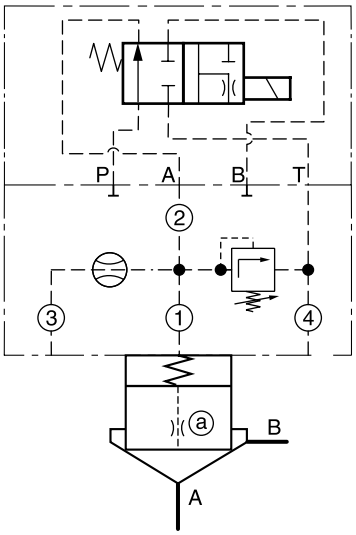

NG16 - NG32

Flow A → B

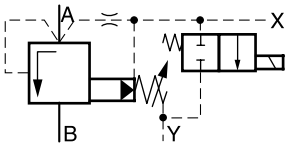

8

Description	Type NG16	NG25	NG32
4/2 DC valve [1]		D1VW105K*	
Cover incl. pressure valve [2]	C016Gxxxxxxxxxxx	C025Gxxxxxxxxxxx	C032Gxxxxxxxxxxx
Cover orifice ①	M5xØ1.0	M5xØ1.1	M6xØ1.4
Cover orifice ②	M5xØ99	M5xØ99	M6xØ99
Cover orifice ③	M4xØ00	M5xØ00	M6xØ00
Cover orifice ④	M5xØ1.2	M5xØ1.3	M6xØ1.4
Cartridge [3]	CP016C07*	CP025C07*	CP032C07*
Poppet orifice ⓐ	1/16NPT x Ø0.8	1/16NPT x Ø0.8	1/16NPT x Ø1.0
Spring		1.6 bar, type S	
Volume reduction	45036578	45036579	45036580
Bolt kit cover	BK414, 4x M8x40	BK391, 4x M12x50	BK415, 4x M16x55
Bolt kit pilot		BK375, 4x M5x30	

[1] Complete type see chapter “Directional Control Valves“, series D1VW.
[2] Complete type see ordering code C*G.
[3] Complete type see ordering code CP*.

Shown orifice Ø and springs are recommendations.
xxØ00 = plug
xxØ99 = open

Examples pressure.INDD 10.04.19

Pressure relief valve with electrical vent function, normally closed and pilot in sandwich design

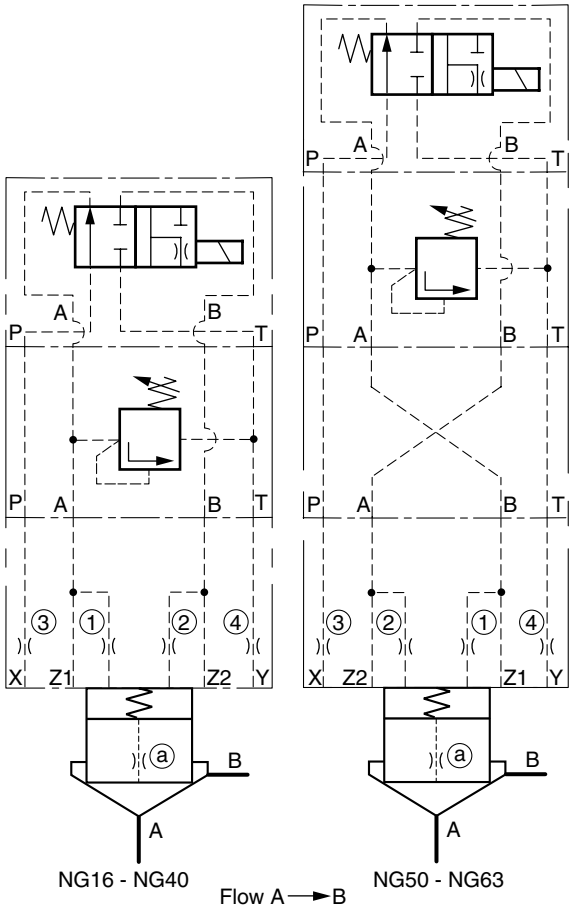

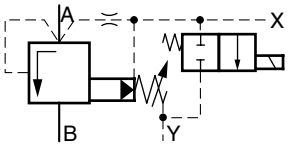

Adaptor plates see chapter 12

Description	Type					
	NG16	NG25	NG32	NG40	NG50	NG63
4/2 DC valve [1]	D1VW105K*					
Pressure valve [2]	V-ZUDB1ATxZ07x					
Adaptor plate [3]	without				PADA1007/A-B/B-A	
Cover [4]	C016CA*	C025CA*	C032CA*	C040CA*	C050CA*	C063CA*
Cover orifice ①	M5xØ1.1	M5xØ1.3	M5xØ1.4	M5xØ1.5	M6xØ1.6	M6xØ1.7
Cover orifice ②	M5xØ00				M6xØ00	
Cover orifice ③	M5xØ99	M6xØ99			M8xØ99	
Cover orifice ④	M5xØ1.3	M6xØ1.5	M6xØ1.7	M6xØ1.8	M8xØ2.0	M8xØ2.2
Cartridge [5]	CP016C07*	CP025C07*	CP032C07*	CP040C07*	CP050C07*	CP063C07*
Poppet orifice ⓐ	1/16NPT x Ø0.9	1/16NPT x Ø1.1	1/16NPT x Ø1.2	1/16NPT x Ø1.3	1/16NPT x Ø1.4	1/16NPT x Ø1.5
Spring	1.6 bar, type S					
Volume reduction	45036578	45036579	45036580	45036581	45036582	45036583
Bolt kit cover	BK414, 4x M8x40	BK391, 4x M12x50	BK415, 4x M16x55	BK416, 4x M20x70	BK417, 4x M20x75	BK418, 4x M30x100
Bolt kit pilot	TK1482					

[1] Complete type see chapter “Directional Control Valves“, series D1VW.
[2] Complete types see pilot valves.
[3] Included O-rings and mounting bolts.
[4] Complete type see ordering code C*C.
[5] Complete type see ordering code CP*.

Shown orifice Ø and springs are recommendations.
xxØ00 = plug
xxØ99 = open

Examples pressure.INDD 10.04.19

Proportional pressure relief valve

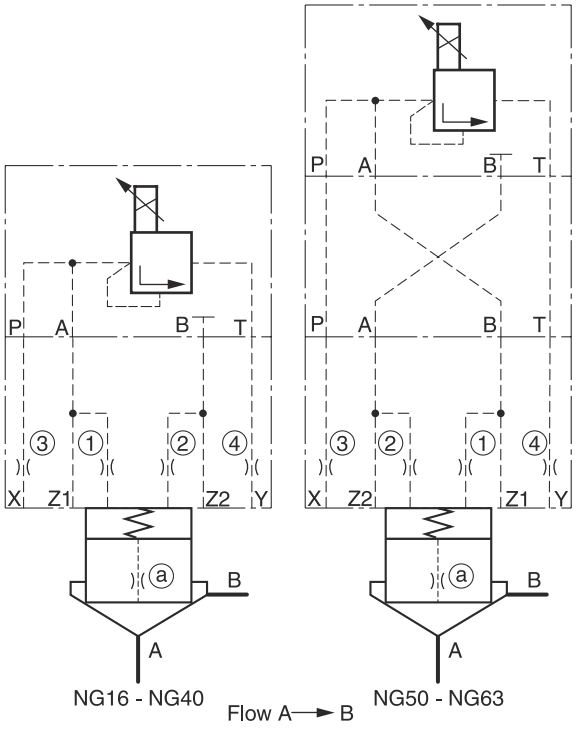

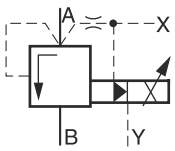

Adaptor plates see chapter 12

8

Description	Type					
	NG16	NG25	NG32	NG40	NG50	NG63
Prop. pressure valve [1]	RE06MxW2V1KW					
Adaptor plate [2]	without				PADA1007/A-B/B-A	
Cover [3]	C016CA*	C025CA*	C032CA*	C040CA*	C050CA*	C063CA*
Cover orifice ①	M5xØ1.4	M5xØ1.4	M5xØ1.4	M5xØ1.4	M6xØ1.4	
Cover orifice ②	M5xØ00				M6xØ00	
Cover orifice ③	M5xØ99	M6xØ99			M8xØ99	
Cover orifice ④	M5xØ1.5	M6xØ1.5	M6xØ1.5	M6xØ1.5	M8xØ1.5	
Cartridge [4]	CP016C07*	CP025C07*	CP032C07*	CP040S07*	CP050S07*	CP063S07*
Poppet orifice ⓐ	1/16NPT x Ø1.3	1/16NPT x Ø1.3	1/16NPT x Ø1.3	1/16NPT x Ø1.3	1/16NPT x Ø1.3	
Spring	0.5 bar, type S					
Volume reduction	45036578	45036579	45036580	45036581	45036582	45036583
Bolt kit cover	BK414, 4x M8x40	BK391, 4x M12x50	BK415, 4x M16x55	BK416, 4x M20x70	BK417, 4x M20x75	BK418, 4x M30x100
Bolt kit pilot	BK375, 4x M5x30					

[1] Complete type see chapter “Pressure Valves“, series RE06M*W.
[2] Inclusive O-Ringe and mounting bolts.
[3] Complete type see ordering code C*C.
[4] Complete type see ordering code CP*.

Shown orifice Ø and springs are recommendations.
xxØ00 = plug
xxØ99 = open

Examples pressure.INDD 10.04.19

Proportional pressure relief valve with mechanical maximum pressure protection and cover with integrated pressure relief function

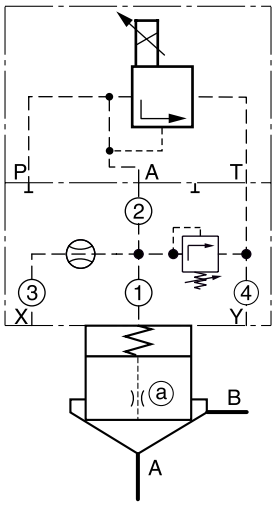

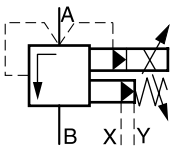

Flow A → B

8

Description	Type NG16	NG25	NG32
Prop. pressure valve [1]	RE06MxW2V1xW		
Cover incl. pressure valve [2]	C016Gxxxxxxxxxxx	C025Gxxxxxxxxxxx	C032Gxxxxxxxxxxx
Cover orifice ①	M5xØ1.4	M5xØ1.4	M6xØ1.4
Cover orifice ②	M5xØ99	M5xØ99	M6xØ99
Cover orifice ③	M4xØ99	M5xØ99	M6xØ99
Cover orifice ④	M5xØ1.5	M5xØ1.5	M6xØ1.5
Cartridge [3]	CP016C07*	CP025C07*	CP032C07*
Poppet orifice ⓐ	1/16NPT x Ø1.3	1/16NPT x Ø1.3	1/16NPT x Ø1.3
Spring	1.6 bar, type S		
Volume reduction	45036578	45036579	45036580
Bolt kit cover	BK414, 4x M8x40	BK391, 4x M12x50	BK415, 4x M16x55
Bolt kit pilot	BK375, 4x M5x30		

[1] Complete type see chapter “Pressure Valves“, series RE06M*W.
[2] Complete type see ordering code C*G.
[3] Complete type see ordering code CP*.

Shown orifice Ø and springs are recommendations.
xxØ00 = plug
xxØ99 = open

Examples pressure.INDD 10.04.19

Proportional pressure relief valve with mechanical maximum pressure protection in sandwich design

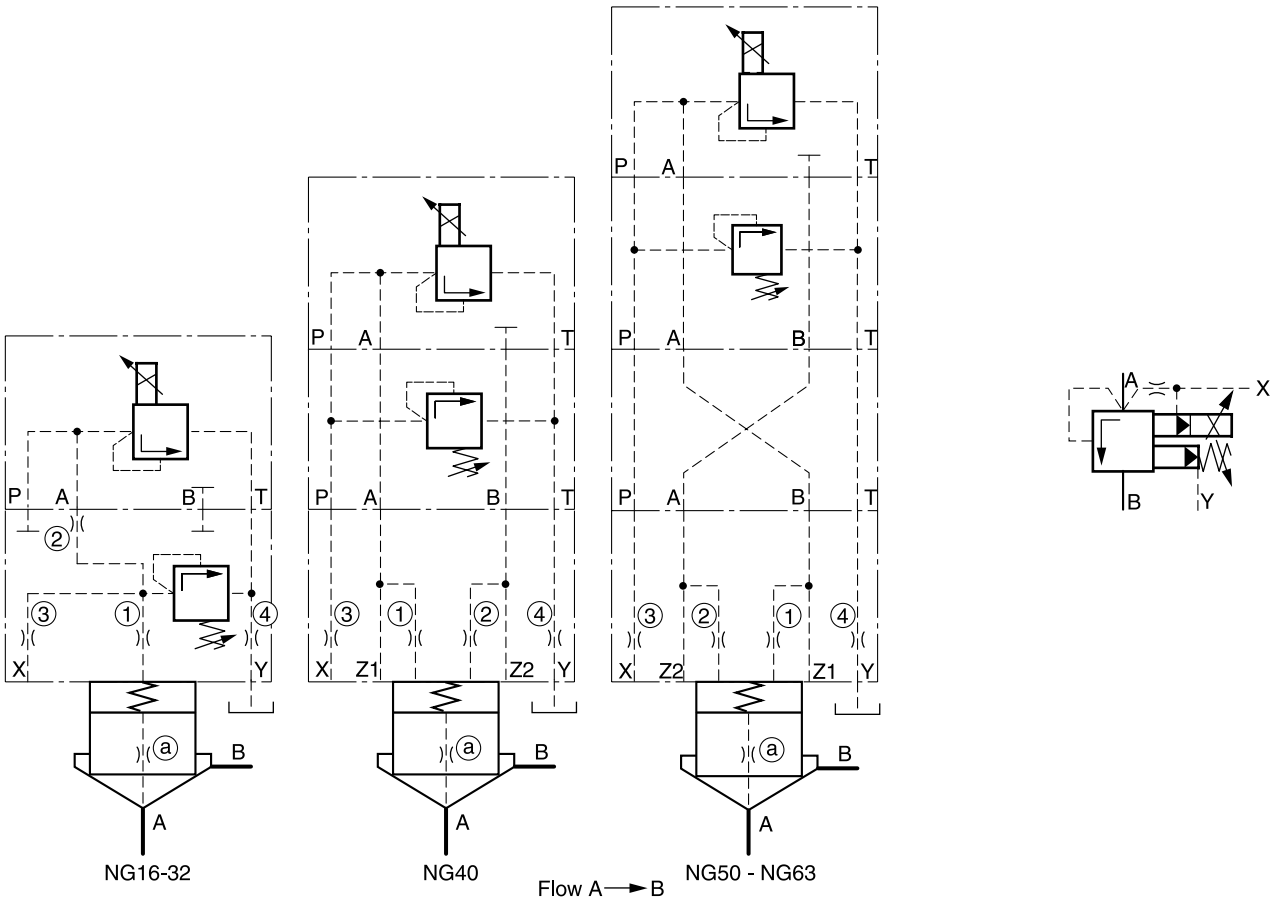

Adaptor plates see chapter 12

8

Description	Type					
	NG16	NG25	NG32	NG40	NG50	NG63
Prop. pressure valve [1]	RE06MxW2V1KW					
Max. pressure valve [2]	ZUDB1PTxZ07x					
Adaptor plate NG10-NG06 [3]	without				PADA1007/A-B/B-A	
Cover [4]	C016CA*	C025CA*	C032CA*	C040CA*	C050CA*	C063CA*
Cover orifice ①	M5xØ1.4	M5xØ1.4		M5xØ1.4	M6xØ1.4	
Cover orifice ②	M5xØ99				M6xØ00	
Cover orifice ③	M5xØ99	M6xØ99			M8xØ99	
Cover orifice ④	M5xØ1.5	M6xØ1.5		M6xØ1.5	M8xØ1.5	
Cartridge [5]	CP016C07*	CP025C07*	CP032C07*	CP040S07*	CP050S07*	CP063S07*
Poppet orifice ⓐ	1/16NPT x Ø1.3	1/16NPT x Ø1.3	1/16NPT x Ø1.3	1/16NPT x Ø1.3	1/16NPT x Ø1.3	
Spring	1.6 bar, type S					
Volume reduction	45036578	45036579	45036580	45036581	45036582	45036583
Bolt kit cover	BK414, 4x M8x40	BK391, 4x M12x50	BK415, 4x M16x55	BK416, 4x M20x70	BK417, 4x M20x75	BK418, 4x M30x100
Bolt kit pilot	TK1482					

[1] Complete type see chapter "Pressure Valves", series RE06M*W.
[2] Complete types see pilot valves.
[3] Included O-rings and mounting bolts.
[4] Complete type see ordering code C*C.
[5] Complete type see ordering code CP*.

Shown orifice Ø and springs are recommendations.xxØ00 = plug
xxØ99 = open

Examples pressure.INDD 10.04.19

Unloading valve

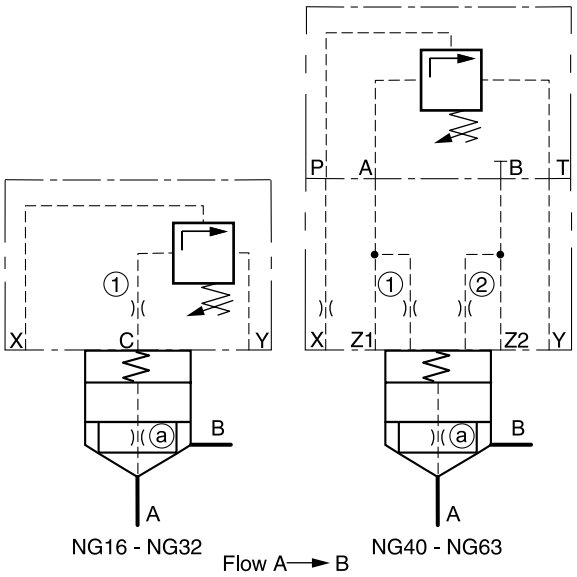

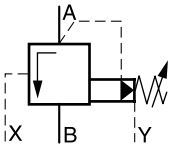

8

Adaptor plates see chapter 12

Description	Type					
	NG16	NG25	NG32	NG40	NG50	NG63
Unloading valve [1]	–			UR06Mxxx4x		
Adaptor plate NG10-NG06 [2]	–	–	–	–	PADA1007/A-B/B-A	
Cover [3]	on request			C040CA*	C050CA*	C063CA*
Cover orifice ①	M5xØ1.4				M6xØ1.4	
Cover orifice ②	M5xØ00				M6xØ00	
Cartridge [4]	CP16C07*	CP25C07*	CP032C07*	CP040S07*	CP050S07*	CP063S07*
Poppet orifice ⓐ	1/16NPT x Ø1.2					
Spring	1.6 bar, type S					
Bolt kit cover	BK414, 4x M8x40	BK391, 4x M12x50	BK415, 4x M16x55	BK416, 4x M20x70	BK417, 4x M20x75	BK418, 4x M30x100
Bolt kit pilot	BK443, 4x M5x45					

[1] Complete types see pilot valves.
[2] Included O-rings and mounting bolts.
[3] Complete type see ordering code C*C.
[4] Complete type see ordering code CP*.

Shown orifice Ø and springs are recommendations.
xxØ00 = plug
xxØ99 = open

Unloading valve with electrical vent function, normally open

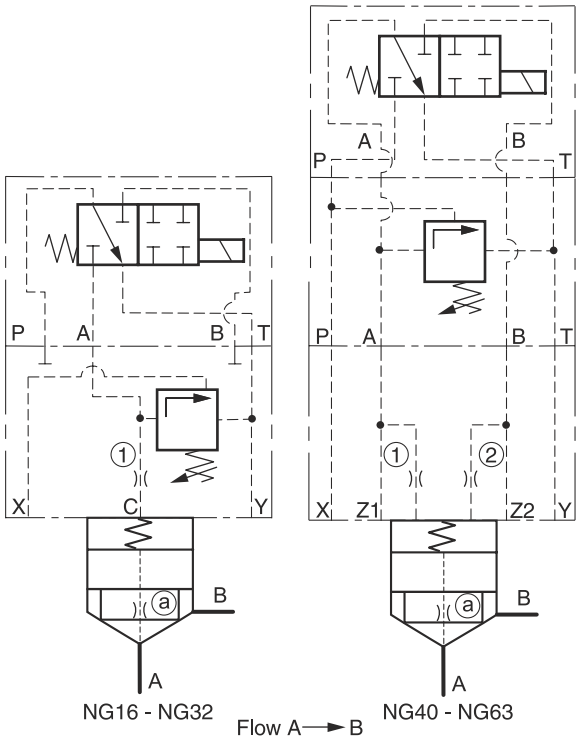

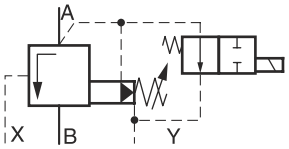

Adaptor plates see chapter 12

8

Description	Type					
	NG16	NG25	NG32	NG40	NG50	NG63
4/2 DC valve [1]	–			D1VW076K*		
Pressure valve [2]	US06Mxxx4x					
Adaptor plate NG10-NG06 [3]	–	–	–	–	PADA1007/A-B/B-A	
Cover [4]	on request			C040CA*	C050CA*	C063CA*
Cover orifice ①	M5xØ1.4				M6xØ1.4	
Cover orifice ②	M5xØ00				M6xØ00	
Cartridge [5]	CP016C07*	CP025C07*	CP032C07*	CP040S07*	CP050S07*	CP063S07*
Poppet orifice ⓐ	1/16NPT x Ø1.2					
Spring	1.6 bar, type S					
Bolt kit cover	BK414, 4x M8x40	BK391, 4x M12x50	BK415, 4x M16x55	BK416, 4x M20x70	BK417, 4x M20x75	BK418, 4x M30x100
Bolt kit pilot	BK401, 4x M5x75					

[1] Complete type see chapter “Directional Control Valves“, series D1VW.
[2] Complete types see pilot valves.
[3] Included O-rings and mounting bolts.
[4] Complete type see ordering code C*C.
[5] Complete type see ordering code CP*.

Shown orifice Ø and springs are recommendations.
xxØ00 = plug
xxØ99 = open

Examples pressure.INDD 10.04.19

Unloading valve with electrical vent function, normally closed

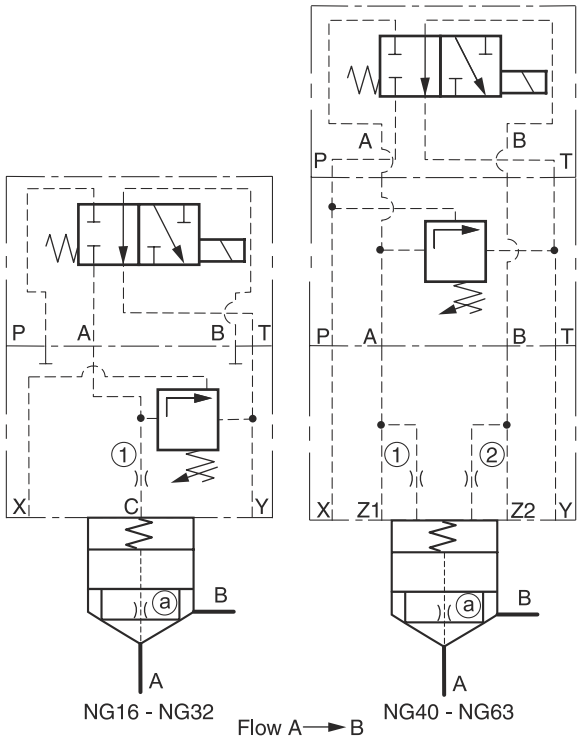

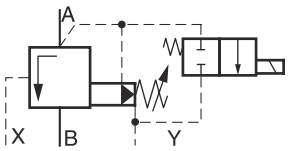

8

Adaptor plates see chapter 12

Description	Type					
	NG16	NG25	NG32	NG40	NG50	NG63
4/2 DC valve [1]	D1VW078K*					
Pressure valve [2]				US06Mxxx4x		
Adaptor plate NG10-NG06 [3]	–	–	–	–	PADA1007/A-B/B-A	
Cover [4]	on request			C040CA*	C050CA*	C063CA*
Cover orifice ①	M5xØ1.4				M6xØ1.4	
Cover orifice ②	M5xØ00				M6xØ00	
Cartridge [5]	CP016C07*	CP025C07*	CP032C07*	CP040S07*	CP050S07*	CP063S07*
Poppet orifice ⓐ	1/16NPT x Ø1.2					
Spring	1.6 bar, type S					
Bolt kit cover	BK414, 4x M8x40	BK391, 4x M12x50	BK415, 4x M16x55	BK416, 4x M20x70	BK417, 4x M20x75	BK418, 4x M30x100
Bolt kit pilot	BK401, 4x M5x75					

[1] Complete type see chapter “Directional Control Valves“, series D1VW.
[2] Complete types see pilot valves.
[3] Included O-rings and mounting bolts.
[4] Complete type see ordering code C*C.
[5] Complete type see ordering code CP*.

Shown orifice Ø and springs are recommendations.
xxØ00 = plug
xxØ99 = open

Pressure sequence valve

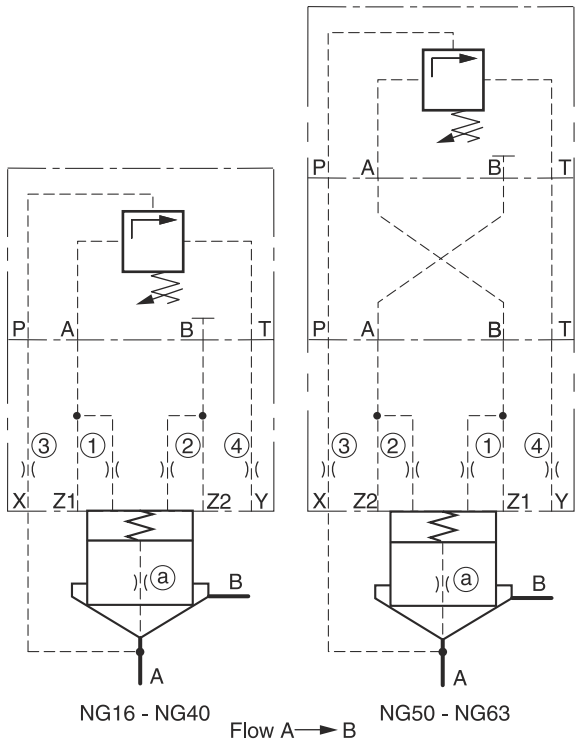

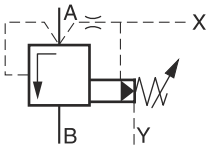

Adaptor plates see chapter 12

8

Description	Type					
	NG16	NG25	NG32	NG40	NG50	NG63
Press. sequ. valve [1]	S06Mxxx4x					
Adaptor plate NG10-NG06 [2]	without				PADA1007/A-B/B-A	
Cover [3]	C016CA*	C025CA*	C032CA*	C040CA*	C050CA*	C063CA*
Cover orifice ①	M5xØ1.1	M5xØ1.3	M5xØ1.4	M5xØ1.5	M6xØ1.6	M6xØ1.7
Cover orifice ②	M5xØ00				M6xØ00	
Cover orifice ③	M5xØ0.9	M6xØ1.1	M6xØ1.2	M6xØ1.3	M8xØ1.4	M8xØ1.5
Cover orifice ④	M5xØ1.3	M6xØ1.5	M6xØ1.7	M6xØ1.8	M8xØ2.0	M8xØ2.2
Cartridge [4]	CE016C01*	CE025C01*	CE032C01*	CE040C01*	CE050C01*	CE063C01*
Poppet orifice ⓐ	1/16NPT x Ø00					
Spring	1.6 bar, type S					
Bolt kit cover	BK414, 4x M8x40	BK391, 4x M12x50	BK415, 4x M16x55	BK416, 4x M20x70	BK417, 4x M20x75	BK418, 4x M30x100
Bolt kit pilot	BK443, 4x M5x45					

[1] Complete types see pilot valves.
[2] Included O-rings and mounting bolts.
[3] Complete type see ordering code C*C.
[4] Complete type see ordering code CE*.

Shown orifice Ø and springs are recommendations.
xxØ00 = closed bottom NG16 - NG50, plug NG63
xxØ99 = open

3-way compensator (in combination with proportional throttle valve)

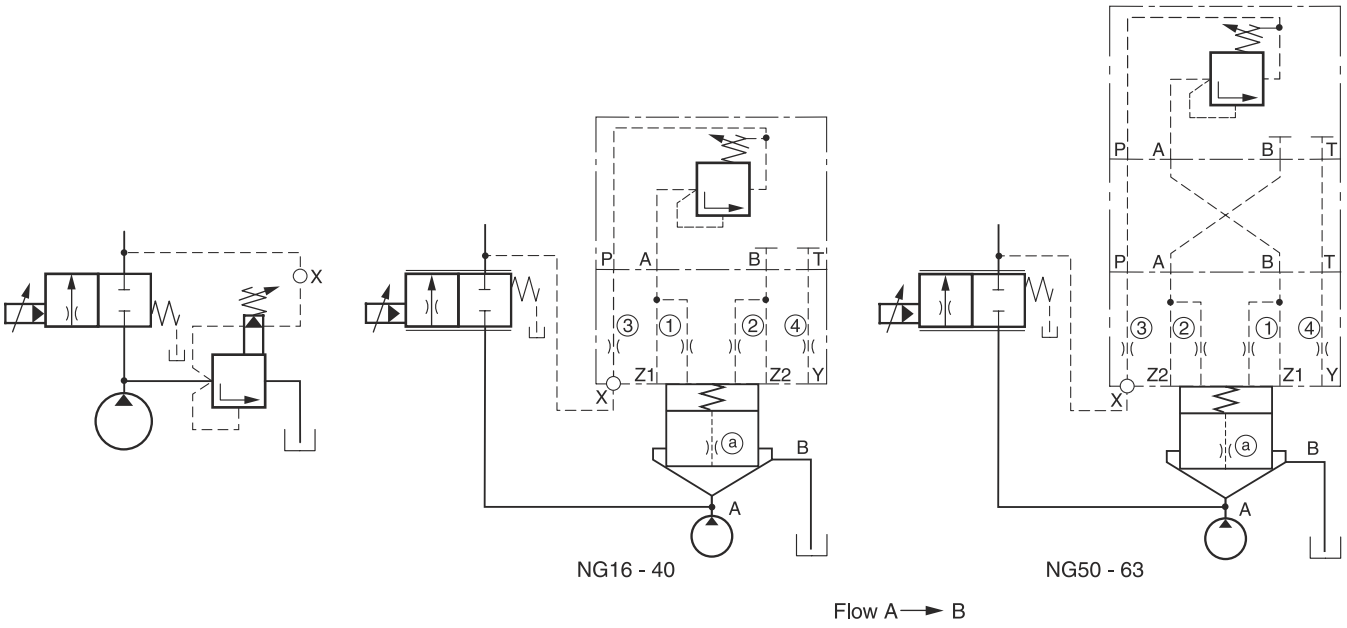

8

Adaptor plates see chapter 12

Description	Type					
	NG16	NG25	NG32	NG40	NG50	NG63
Preload valve [1]	DSBA100xP07x					
Adaptor plate NG10-NG06 [2]	without				PADA1007/A-B/B-A	
Cover [3]	C016CA*	C025CA*	C032CA*	C040CA*	C050CA*	C063CA*
Cover orifice ①	M5xØ1.1	M5xØ1.3	M5xØ1.4	M5xØ1.5	M6xØ1.6	M6xØ1.7
Cover orifice ②	M5xØ00				M6xØ00	
Cover orifice ③	M5xØ99	M6xØ99			M8xØ99	
Cover orifice ④	M5xØ1.3	M6xØ1.5	M6xØ1.7	M6xØ1.8	M8xØ2.0	M8xØ2.2
Cartridge [4]	CE016C01*	CE025C01*	CE032C01*	CE040C01*	CE050C01*	CE063C01*
Poppet orifice ⓐ	1/16NPT x Ø0.9	1/16NPT x Ø1.1	1/16NPT x Ø1.2	1/16NPT x Ø1.3	1/16NPT x Ø1.4	1/16NPT x Ø1.5
Spring	1.6 bar, type S					
Bolt kit cover	BK414, 4x M8x40	BK391, 4x M12x50	BK415, 4x M16x55	BK416, 4x M20x70	BK417, 4x M20x75	BK418, 4x M30x100
Bolt kit pilot	BK443, 4x M5x45					

[1] Complete type see pilot valves.
[2] Included O-rings and mounting bolts.
[3] Complete type see ordering code C*C.
[4] Complete type see ordering code CE*.

Shown orifice Ø and springs are recommendations.
xxØ00 = closed bottom NG16 - NG50, plug NG63
xxØ99 = open

3-way compensator with mechanical maximum pressure protection (in combination with proportional throttle valve)

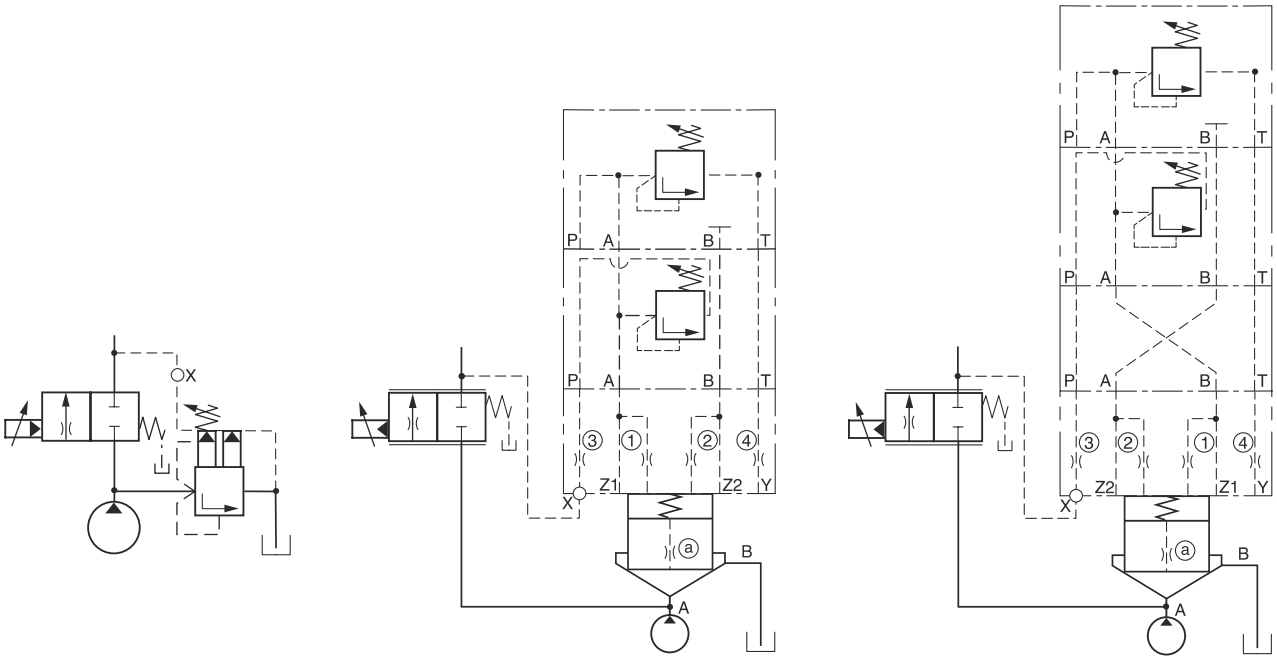

Adaptor plates see chapter 12

8

Description	Type					
	NG16	NG25	NG32	NG40	NG50	NG63
Pressure valve [1]	R06Mxxx4x					
Preload valve [1]	DSBA100xZ07x					
Adaptor plate NG10-NG06 [2]	without				PADA1007/A-B/B-A	
Cover [3]	C016CA*	C025CA*	C032CA*	C040CA*	C050CA*	C063CA*
Cover orifice ①	M5xØ1.1	M5xØ1.3	M5xØ1.4	M5xØ1.5	M6xØ1.6	M6xØ1.7
Cover orifice ②	M5xØ00				M6xØ00	
Cover orifice ③	M5xØ99	M6xØ99			M8xØ99	
Cover orifice ④	M5xØ1.3	M6xØ1.5	M6xØ1.7	M6xØ1.8	M8xØ2.0	M8xØ2.2
Cartridge [4]	CE016C01*	CE025C01*	CE032C01*	CE040C01*	CE050C01*	CE063C01*
Poppet orifice ⓐ	1/16NPT x Ø0.9	1/16NPT x Ø1.1	1/16NPT x Ø1.2	1/16NPT x Ø1.3	1/16NPT x Ø1.4	1/16NPT x Ø1.5
Spring	1.6 bar, type S					
Bolt kit cover	BK414, 4x M8x40	BK391, 4x M12x50	BK415, 4x M16x55	BK416, 4x M20x70	BK417, 4x M20x75	BK418, 4x M30x100
Bolt kit pilot	TK1482					

[1] Complete type see examples pilot valve.
[2] Included O-rings and mounting bolts.
[3] Complete type see ordering code C*C.
[4] Complete type see ordering code CE*.

Shown orifice Ø and springs are recommendations.
xxØ00 = closed bottom NG16 - NG50, plug NG63
xxØ99 = open

Examples pressure.INDD 10.04.19

3-way compensator with proportional pressure relief function (in combination with proportional throttle valve)

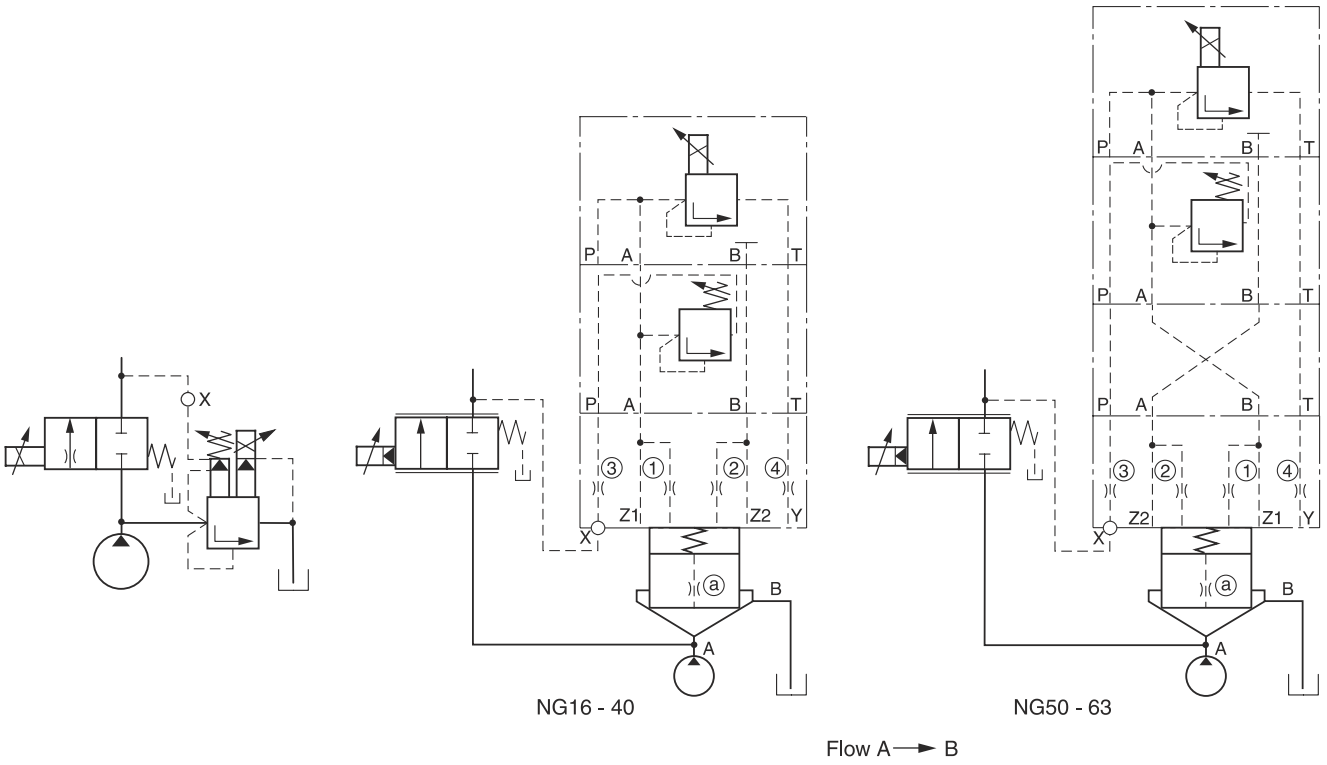

8

Adaptor plates see chapter 12

Description	Type					
	NG16	NG25	NG32	NG40	NG50	NG63
Prop. press. valve [1]	RE06MxW2V1KW*					
Preload valve [2]	DSBA100xZ07x					
Adaptor plate NG10-NG06 [3]	without				PADA1007/A-B/B-A	
Cover [4]	C016CA*	C025CA*	C032CA*	C040CA*	C050CA*	C063CA*
Cover orifice ①	M5xØ1.1	M5xØ1.3	M5xØ1.4	M5xØ1.5	M6xØ1.6	M6xØ1.7
Cover orifice ②	M5xØ00				M6xØ00	
Cover orifice ③	M5xØ99	M6xØ99			M8xØ99	
Cover orifice ④	M5xØ1.3	M6xØ1.5	M6xØ1.7	M6xØ1.8	M8xØ2.0	M8xØ2.2
Cartridge [5]	CE016C01*	CE025C01*	CE032C01*	CE040C01*	CE050C01*	CE063C01*
Poppet orifice ⓐ	1/16NPT x Ø0.9	1/16NPT x Ø1.1	1/16NPT x Ø1.2	1/16NPT x Ø1.3	1/16NPT x Ø1.4	1/16NPT x Ø1.5
Spring	1.6 bar, type S					
Volume reduction	45036578	45036579	45036580	45036581	45036582	45036583
Bolt kit cover	BK414, 4x M8x40	BK391, 4x M12x50	BK415, 4x M16x55	BK416, 4x M20x70	BK417, 4x M20x75	BK418, 4x M30x100
Bolt kit pilot	TK1482					

[1] Complete type see chapter “Pressure Valves“, series RE06M*W.
[2] Complete type see pilot valves.
[3] Included O-rings and mounting bolts.
[4] Complete type see ordering code C*C.
[5] Complete type see ordering code CE*.

Shown orifice Ø and springs are recommendations.
xxØ00 = closed bottom NG16 - NG50, plug NG63
xxØ99 = open

Examples pressure.INDD 10.04.19

3-way compensator with mechanical max. pressure protection and electrical vent function, normally open (in combination with proportional throttle valve)

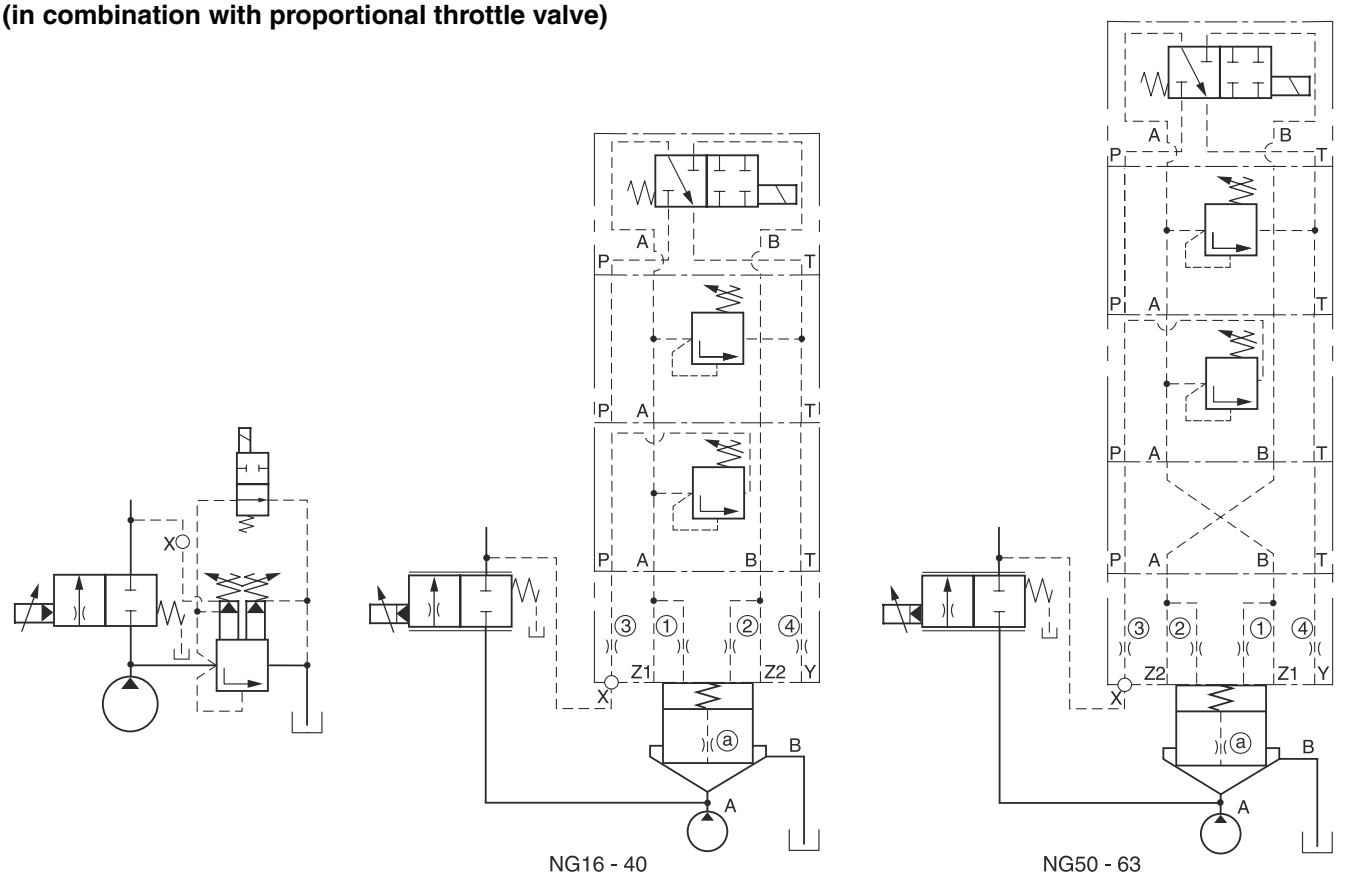

Adaptor plates see chapter 12

Description	Type					
	NG16	NG25	NG32	NG40	NG50	NG63
4/2 DC valve [1]	D1VW076K*					
Press. valve [2]	ZUDB1ATxZ07x					
Preload valve [2]	DSBA100xZ07x					
Adaptor plate NG10-NG06 [3]	without				PADA1007/A-B/B-A	
Cover [4]	C016CA*	C025CA*	C032CA*	C040CA*	C050CA*	C063CA*
Cover orifice ①	M5xØ1.1	M5xØ1.3	M5xØ1.4	M5xØ1.5	M6xØ1.6	M6xØ1.7
Cover orifice ②	M5xØ00				M6xØ00	
Cover orifice ③	M5xØ99	M6xØ99			M8xØ99	
Cover orifice ④	M5xØ1.3	M6xØ1.5	M6xØ1.7	M6xØ1.8	M8xØ2.0	M8xØ2.2
Cartridge [5]	CE016C01*	CE025C01*	CE032C01*	CE040C01*	CE050C01*	CE063C01*
Poppet orifice ⓐ	1/16NPT x Ø0.9	1/16NPT x Ø1.1	1/16NPT x Ø1.2	1/16NPT x Ø1.3	1/16NPT x Ø1.4	1/16NPT x Ø1.5
Spring	1.6 bar, type S					
Bolt kit cover	BK414, 4x M8x40	BK391, 4x M12x50	BK415, 4x M16x55	BK416, 4x M20x70	BK417, 4x M20x75	BK418, 4x M30x100
Bolt kit pilot	TK1473					

[1] Complete type see chapter "Directional Control Valves", series D1VW.
[2] Complete type see pilot valves.
[3] Included O-rings and mounting bolts.
[4] Complete type see ordering code C*C.
[5] Complete type see ordering code CE*.

Shown orifice Ø and springs are recommendations.
xxØ00 = closed bottom NG16 - NG50, plug NG63
xxØ99 = open

Examples pressure.INDD 10.04.19

3-way compensator with proportional pressure relief function and mechanical maximum pressure protection (in combination with proportional throttle valve)

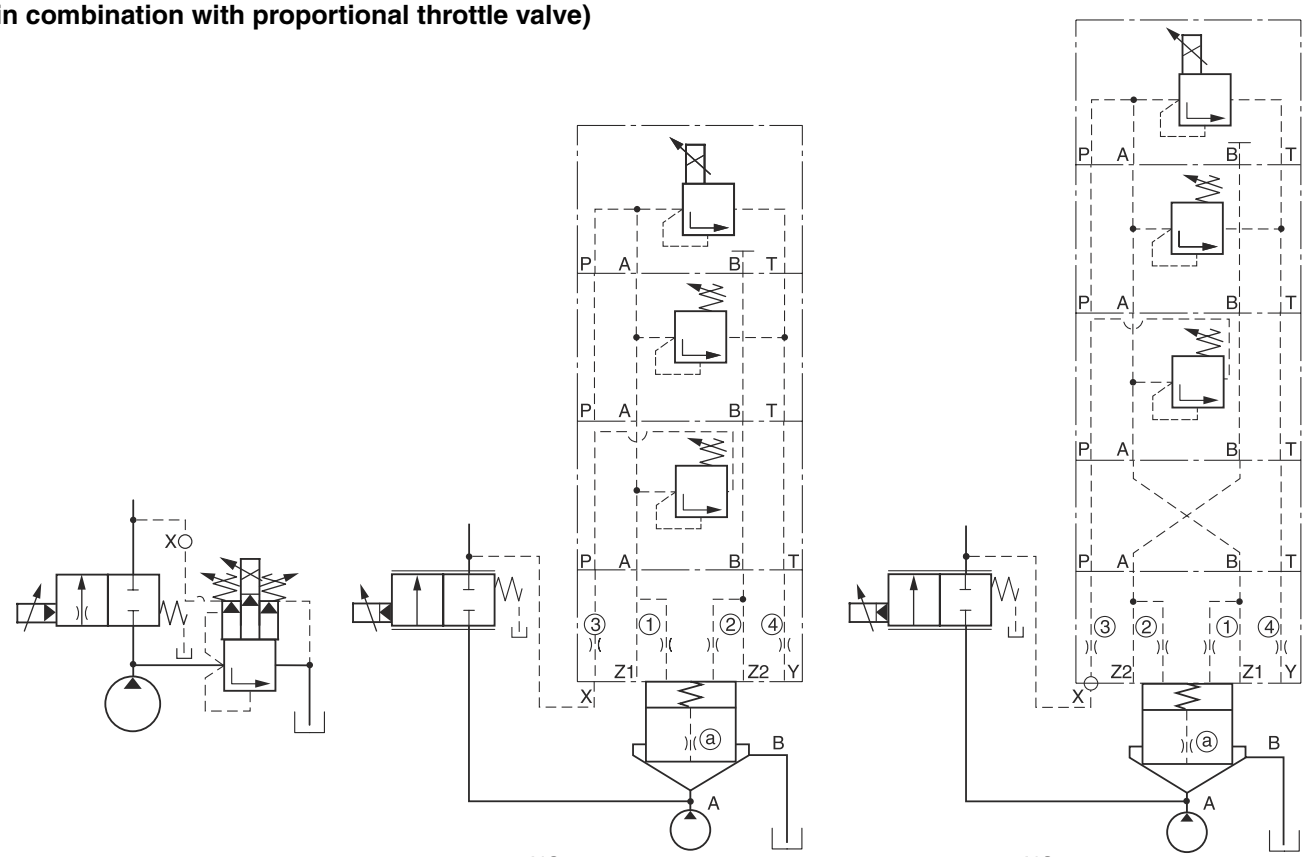

Adaptor plates see chapter 12

Description	Type NG16	NG25	NG32	NG40	NG50	NG63
Prop. press. valve [1]	RE06MxW2V1KW*					
Press. valve [2]	ZUDB1ATxZ07x					
Preload valve [2]	DSBA100xZ07x					
Adaptor plate NG10-NG06 [3]	without				PADA1007/A-B/B-A	
Cover [4]	C016CA*	C025CA*	C032CA*	C040CA*	C050CA*	C063CA*
Cover orifice ①	M5xØ1.1	M5xØ1.3	M5xØ1.4	M5xØ1.5	M6xØ1.6	M6xØ1.7
Cover orifice ②	M5xØ00				M6xØ00	
Cover orifice ③	M5xØ99	M6xØ99			M8xØ99	
Cover orifice ④	M5xØ1.3	M6xØ1.5	M6xØ1.7	M6xØ1.8	M8xØ2.0	M8xØ2.2
Cartridge [5]	CE016C01*	CE025C01*	CE032C01*	CE040C01*	CE050C01*	CE063C01*
Poppet orifice ⓐ	1/16NPT x Ø0.9	1/16NPT x Ø1.1	1/16NPT x Ø1.2	1/16NPT x Ø1.3	1/16NPT x Ø1.4	1/16NPT x Ø1.5
Spring	1.6 bar, type S					
Volume reduction	45036578	45036579	45036580	45036581	45036582	45036583
Bolt kit cover	BK414, 4x M8x40	BK391, 4x M12x50	BK415, 4x M16x55	BK416, 4x M20x70	BK417, 4x M20x75	BK418, 4x M30x100
Bolt kit pilot	TK1473					

[1] Complete type see chapter "Pressure Valves", series RE06M*W.
[2] Complete type see pilot valves.
[3] Included O-rings and mounting bolts.
[4] Complete type see ordering code C*C.
[5] Complete type see ordering code CE*.

Shown orifice Ø and springs are recommendations.
xxØ00 = closed bottom NG16 - NG50, plug NG63
xxØ99 = open

Check valves of the series C1DB consist of a slip-in valve, that is designed for a compact manifold block installation.

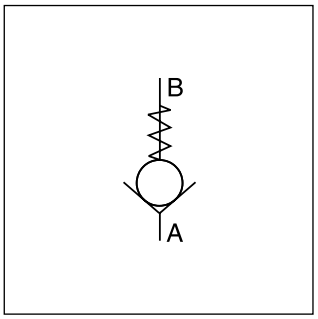

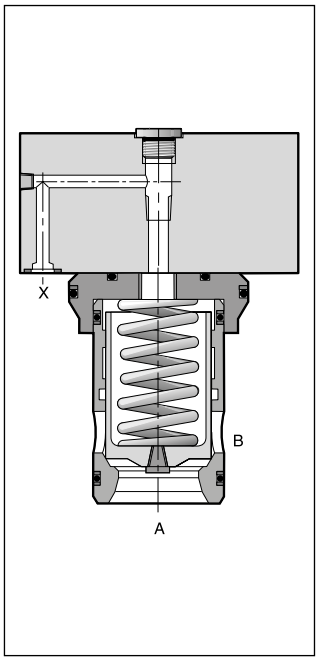

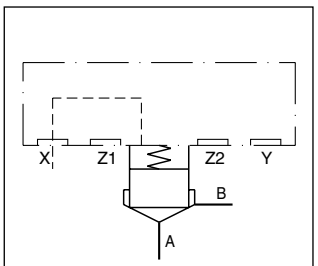

Features

- Cavity and mounting pattern according to ISO 7368
- 4 different springs
- 8 sizes NG16 to NG100

Ordering code

☐	–	**C1DB**	**101**	**E**	☐	/	**0**	☐	**99**	**00**
Seal		**Check valve**	**Cover**	**Slip-in valve**	**Nominal size**		**Design series**	**Closing spring**		

Code	Seal
omit	**NBR**
V	FPM

Code	Nominal size
16	**NG16**
25	**NG25**
32	**NG32**
40	**NG40**
50	**NG50**
63	**NG63**
80	NG80
100	NG100

Code	Spring
L	0.1 bar
N	0.5 bar
S	**1.6 bar**
T	2.5 bar
U	4.0 bar

Bold letters =
Short-term availability

Replacement springs see spare and mounting parts

Technical data

General									
Design			2-way cartridge valve, according to ISO 7368						
Nominal size			**NG16**	**NG25**	**NG32**	**NG40**	**NG50**	**NG63**	**NG80**	**NG100**
Actuation			hydraulical						
Mounting position			unrestricted						
Ambient temperature		[°C]	-20 ... +60						
$MTTF_D$ value		[years]	150						
Weight		[kg]	1.2	2.5	3.9	7	11.4	21.8	45	74
Hydraulics									
Flow direction			See symbols						
Fluid			Hydraulic oil according to DIN 51524						
Fluid temperature		[°C]	-20...+70 (NBR: -25...+70)						
Viscosity,	permitted	[cSt] / [mm²/s]	20...400						
	recommended	[cSt] / [mm²/s]	30...80						
Filtration			ISO 4406 (1999); 18/16/13						
Nominal pressure		[bar]	350						
Flow		[l/min]	250	450	900	1300	1800	3600	5250	8000
Opening pressure, spring		[bar]	L = 0.1; N = 0.5; S = 1.6; T = 2.5; U = 4.0						

C1DB UK.INDD 10.04.19

Performance curves

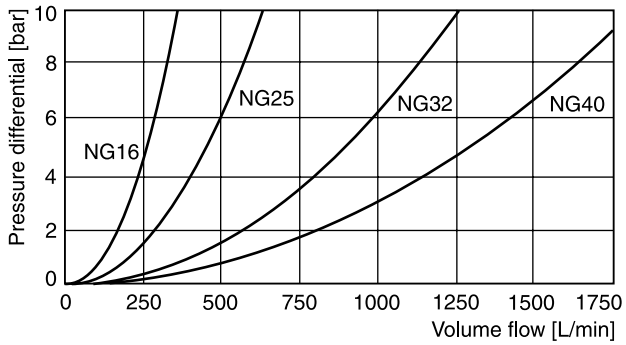

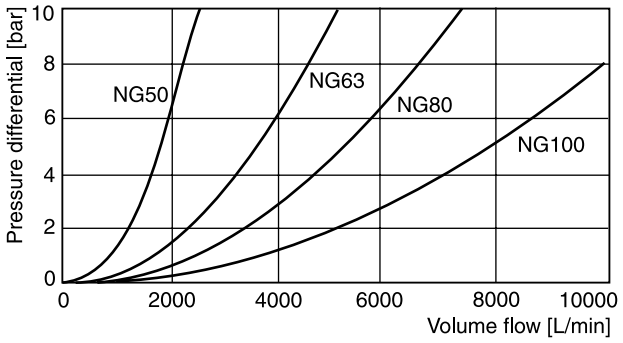

All characteristic curves measured with HLP46 at 50 °C.

Dimensions

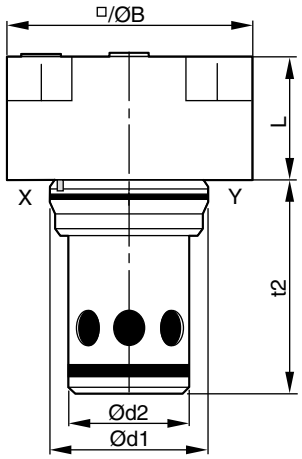

NG	L	B	d1	d2	t2
16	36	65	32	25	56
25	45	85	45	34	72
32	50	102	60	45	85
40	60	125	75	55	105
50	70	140	90	68	122
63	85	180	120	90	155
80	105	Ø 250	145	110	205
100	120	Ø 300	180	135	245

NG	Kit	ISO 4762-12.9	[Nm]	Kit NBR	Kit FPM	Orifice thread
16	BK441	4x M8x50	31.8	SK-CBE160	SK-CBE160V	1/16 NPT
25	BK391	4x M12x50	108	SK-CBE250	SK-CBE250V	1/16 NPT
32	BK415	4x M16x55	264	SK-CBE320	SK-CBE320V	1/16 NPT
40	BK416	4x M20x70	517	SK-CBE400	SK-CBE400V	1/8 NPT
50	BK417	4x M20x75	517	SK-CBE500	SK-CBE500V	1/8 NPT
63	BK418	4x M30x100	1775	SK-CBE630	SK-CBE630V	1/8 NPT
80	BK419	8x M24x120	890	SK-CBE800	SK-CBE800V	1/8 NPT
100	BK420	8x M30x140	1775	SK-CBE1000	SK-CBE1000V	1/8 NPT

Hydraulically pilot operated check valves allow free flow from A to B. The counter-flow direction is blocked.

When pressure is applied to control port X, the ring chamber flow from B to A is released. The pilot control ratio is 6:1.



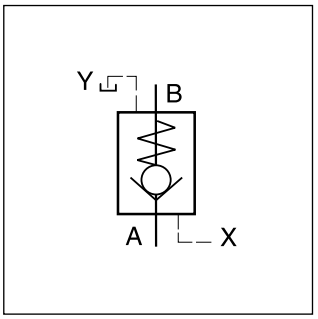

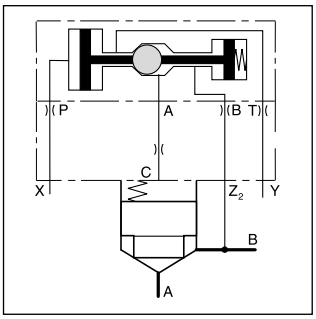

Function

When no pressure is applied to the X-port, the flow from B to A is blocked, because the pressure in B is also effective on top of the poppet.

Pressurizing the X-port relieves the area on top of the poppet to the drain port and allows flow from B to A. The seat design of the SVLB valve series provides leak-free separation of port A and B in the closed position.

Features

- Pilot operated check valve
- Cavity and mounting pattern acc. to ISO 7368
- Dampening poppet optional
- 5 sizes NG16 to NG50

8

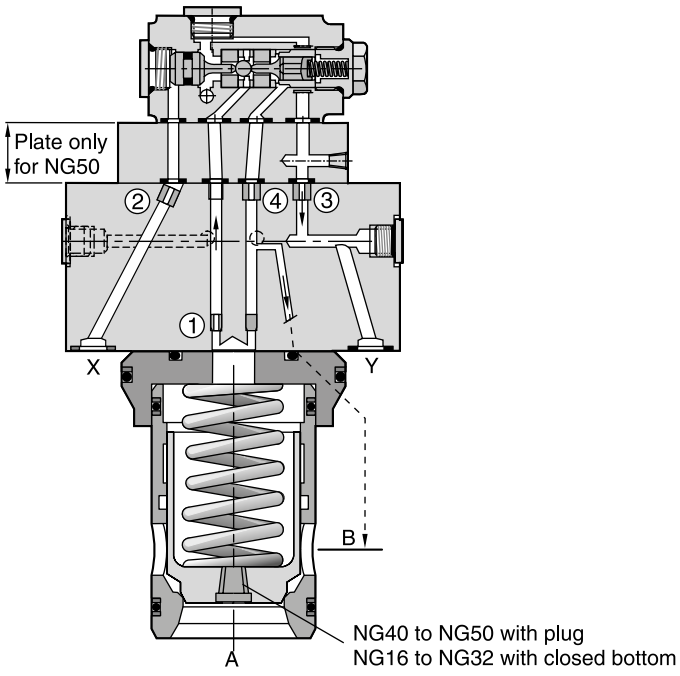

Ordering code

	SVL	B	10		6	E			
Seal	Hydr. operated check valve	Slip-in mounting	Design style acc. to ISO 7368	Poppet type	Pilot control ratio 6:1	Slip-in cartridge valve	Valve size	Closing spring	Design series (not required for ordering)

Code	Seal
omit	**NBR**
V	FPM

Code	Poppet type
4	**04**
8 [1]	08

Code	Spring
N	0.5 bar
S	**1.6 bar**
T	2.5 bar
U	4.0 bar

Code	Size
16	NG16
25	**NG25**
32	**NG32**
40	NG40
50	NG50

Bold letters =
Short-term availability

Technical data

General						
Nominal size		**NG16**	**NG25**	**NG32**	**NG40**	**NG50**
Interface		Slip-in mounting acc. ISO 7368				
Mounting position		unrestricted				
Ambient temperature	[°C]	-20...+60				
$MTTF_D$ value	[years]	75				
Weight	[kg]	2.3	3.2	4.6	7.8	12.0
Hydraulics						
Max. operating pressure	[bar]	350				
Nominal flow	[l/min]	250	450	900	1300	1800
Fluid		Hydraulic oil according to DIN 51524				
Fluid temperature	[C°]	-20...+70 (NBR: -25...+70)				
Viscosity, permitted	[cSt] / [mm²/s]	20...400				
recommended	[cSt] / [mm²/s]	30...80				
Filtration		ISO 4406 (1999); 18/16/13				

Δp/Q flow curve

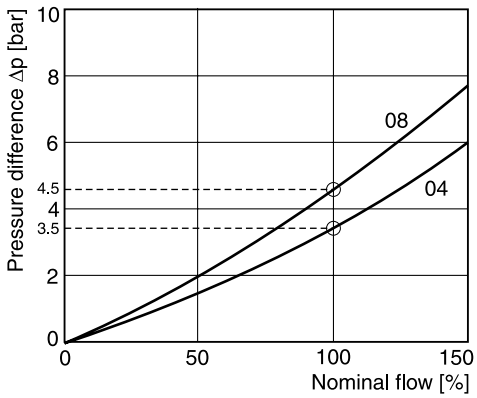

Poppet type 04, 08, without spring.

All characteristic curves measured with HLP46 at 50 °C.

[1] With damping nose.

Standard orifices

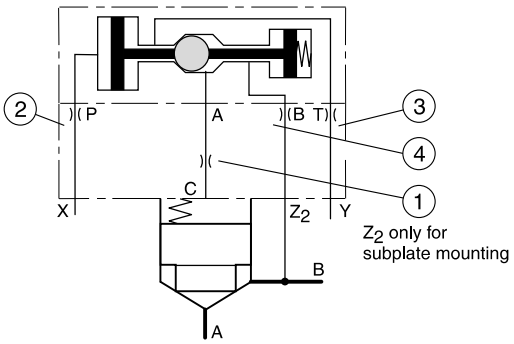

Pos.	E16	E25	E32	E40	E50
1	open (M5)	open (M5)	open (M5)	open (M5)	open (M6)
2	Ø1.2 (M5)	Ø1.2 (M6)	Ø1.2 (M6)	Ø1.2 (M6)	Ø1.2 (M8)
3	open (M5)	open (M6)	open (M6)	open (M6)	open (M8)
4	Ø1.0 (M5)	Ø1.2 (M5)	Ø1.3 (M5)	Ø1.5 (M6)	Ø2.0 (M6)

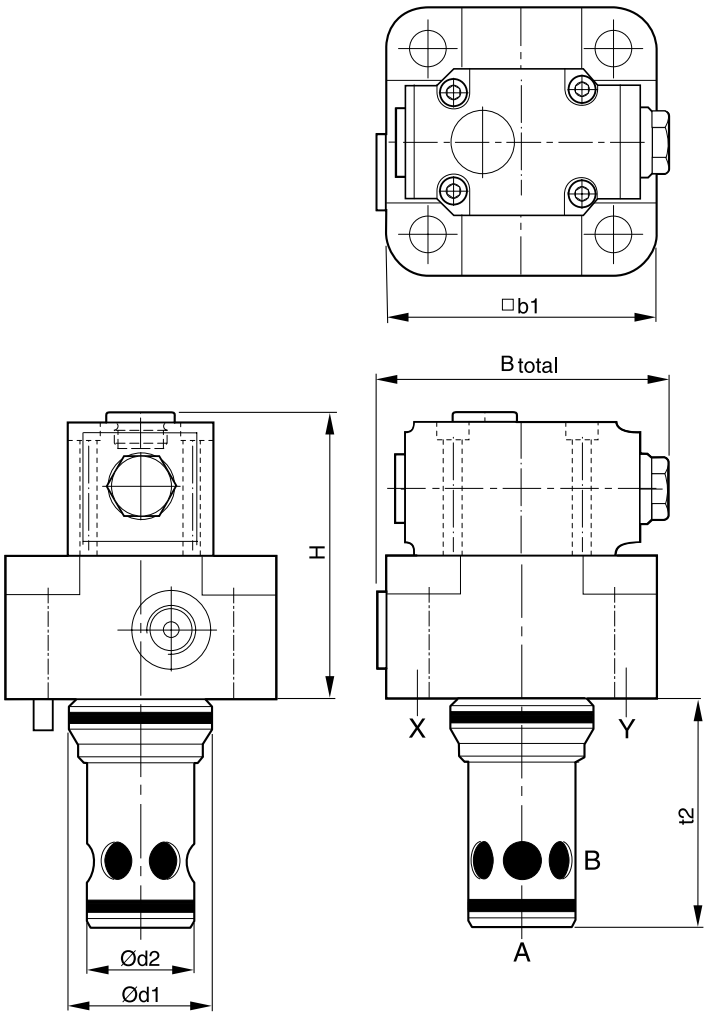

Size	16	25	32	40	50
H	84	88	93	103	138
b1	79*	85	102	125	140
$d1^{H7}$	32	45	60	75	90
$d2^{H7}$	25	34	45	55	68
$t2^{+0.1}$	56	72	85	105	122
Bges.	99	94	103	133	148

NG	Kit	ISO 4762-12.9	[Nm]	Kit NBR	Kit FPM
16	BK441	4x M8x50	31.8	SK-SVLB10E16	SK-SVLB10E16V
25	BK391	4x M12x50	108	SK-SVLB10E25	SK-SVLB10E25V
32	BK415	4x M16x55	264	SK-SVLB10E32	SK-SVLB10E32V
40	BK416	4x M20x70	517	SK-SVLB10E40	SK-SVLB10E40V
50	BK417	4x M20x75	517	SK-SVLB10E50	SK-SVLB10E50V

* Width 65 mm.

SVLB UK.INDD 10.04.19

2-way seat valve, flow A ⇒ B

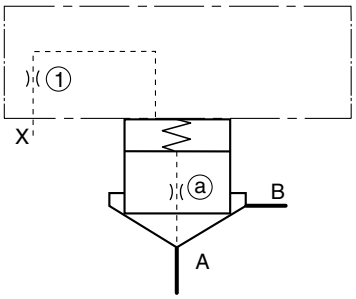

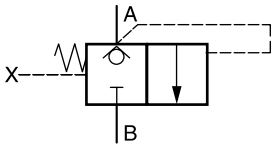

Description	Type							
	NG16	NG25	NG32	NG40	NG50	NG63	NG80	NG100
Cover [1]	C016AA*	C025AA*	C032AA*	C040AA*	C050AA*	C063AA*	C080AA*	C100AA*
Cover orifice ①	1/16xØ0.8	1/16xØ1.0	1/16xØ1.2	1/8xØ1.5	1/8xØ1.8	1/8xØ2.0	1/8xØ2.2	1/8xØ2.5
Cartridge [2]	CE016C01*	CE025C01*	CE032C01*	CE040C01*	CE050C01*	CE063C01*	CE080C01*	CE100C01*
Poppet orifice ⓐ	1/16xØ00							
Spring	1.6 bar, type S							
Bolt kit cover	BK414 4x M8x40	BK391 4x M12x50	BK415 4x M16x55	BK416 4x M20x70	BK417 4x M20x75	BK418 4x M30x100	BK419 8x M24x120	BK509 8x M30x130

[1] Complete type see ordering code C*A.
[2] Complete type see ordering code CE*.

Shown orifice Ø and springs are recommendations.
xxØ00 = closed bottom NG16 - NG50, plug NG63 - NG100
xxØ99 = open

8

2-way seat valve with stroke limiter, flow A ⇒ B

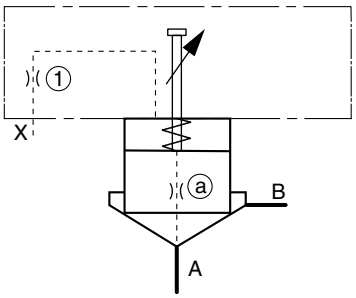

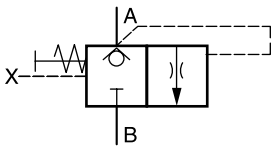

Description	Type							
	NG16	NG25	NG32	NG40	NG50	NG63	NG80	NG100
Cover [1]	C016B**	C025B**	C032B**	C040B**	C050B**	C063B**	C080B**	C100B**
Cover orifice ①	M6xØ0.8	M6xØ1.0	1/16xØ1.2	1/16xØ1.5	1/16xØ1.8	1/8xØ2.0	1/8xØ2.2	1/8xØ2.5
Cartridge [2]	CE016C01*	CE025C01*	CE032C01*	CE040C01*	CE050C01*	CE063C01*	CE080C01*	CE100C01*
Poppet orifice ⓐ	1/16xØ00							
Spring	1.6 bar, type S							
Bolt kit cover	BK414 4x M8x40	BK391 4x M12x50	BK415 4x M16x55	BK416 4x M20x70	BK417 4x M20x75	BK418 4x M30x100	BK419 8x M24x120	BK509 8x M30x130

[1] Complete type see ordering code C*B.
[2] Complete type see ordering code CE*.

Shown orifice Ø and springs are recommendations.
xxØ00 = closed bottom NG16 - NG50, plug NG63 - NG100
xxØ99 = open

2-way functions with dampening poppet, flow A ⇔ B

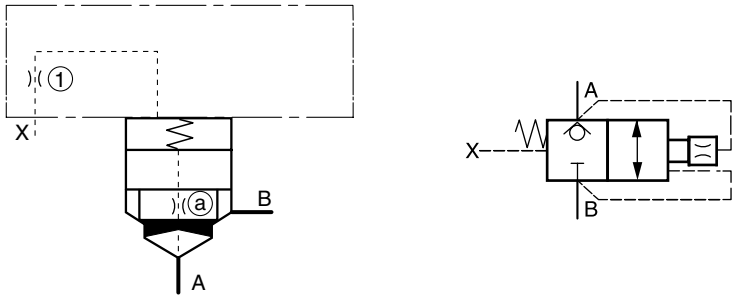

Description	Type							
	NG16	NG25	NG32	NG40	NG50	NG63	NG80	NG100
Cover [1]	C016AA*	C025AA*	C032AA*	C040AA*	C050AA*	C063AA*	C080AA*	C100AA*
Cover orifice ①	1/16xØ0.8	1/16xØ1.0	1/16xØ1.2	1/8xØ1.5	1/8xØ1.8	1/8xØ2.0	1/8xØ2.2	1/8xØ2.5
Cartridge [2]	CE016C08*	CE025C08*	CE032C08*	CE040C08*	CE050C08*	CE063C08*	CE080C08*	CE100C08*
Poppet orifice ⓐ	1/16xØ00							
Spring	1.6 bar, type S							
Bolt kit cover	BK414 4x M8x40	BK391 4x M12x50	BK415 4x M16x55	BK416 4x M20x70	BK417 4x M20x75	BK418 4x M30x100	BK419 8x M24x120	BK509 8x M30x130

[1] Complete type see ordering code C*A.
[2] Complete type see ordering code CE*.

Shown orifice Ø and springs are recommendations.
xxØ00 = plug
xxØ99 = open

2-way functions with stroke limiter and dampening poppet, flow A ⇔ B

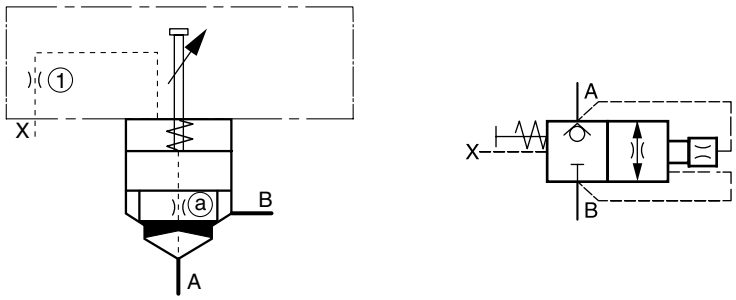

Description	Type							
	NG16	NG25	NG32	NG40	NG50	NG63	NG80	NG100
Cover [1]	C016B*	C025B*	C032B*	C040B*	C050B*	C063B*	C080B*	C100B*
Cover orifice ①	M6xØ0.8	M6xØ1.0	1/16xØ1.2	1/16xØ1.5	1/16xØ1.8	1/8xØ2.0	1/8xØ2.2	1/8xØ2.5
Cartridge [2]	CE016C08*	CE025C08*	CE032C08*	CE040C08*	CE050C08*	CE063C08*	CE080C08*	CE100C08*
Poppet orifice ⓐ	1/16xØ00							
Spring	1.6 bar, type S							
Bolt kit cover	BK414 4x M8x40	BK391 4x M12x50	BK415 4x M16x55	BK416 4x M20x70	BK417 4x M20x75	BK418 4x M30x100	BK419 8x M24x120	BK509 8x M30x130

[1] Complete type see ordering code C*B.
[2] Complete type see ordering code CE*.

Shown orifice Ø and springs are recommendations.
xxØ00 = plug
xxØ99 = open

2-way seat valve with pilot, normally closed, flow A ⇔ B

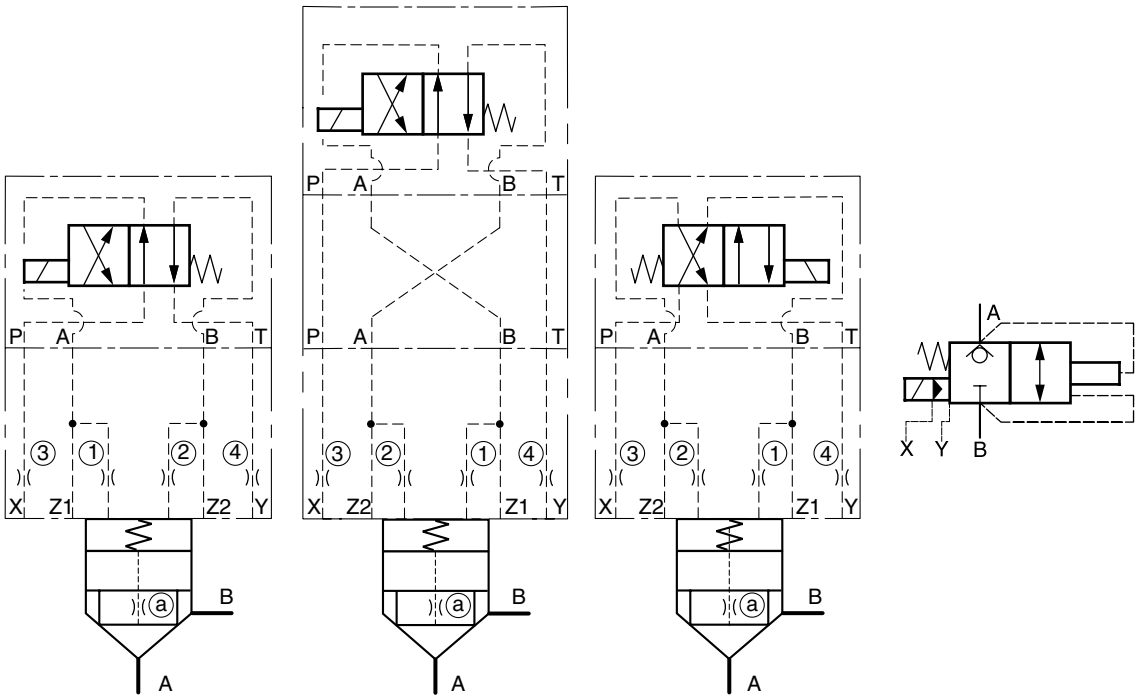

NG16 - 40 with pilot NG06

NG50 - 63 with pilot NG06

NG50 - 100 with pilot NG10

8

Adaptor plates see chapter 12.

Description	Type									
	Pilot NG06						Pilot NG10			
	NG16	NG25	NG32	NG40	NG50	NG63	NG50	NG63	NG80	NG100
4/2-DC valve [1]	D1VW20B*						D3W20H*			
Adaptor plate [2]	without				PADA1007/A-B/B-A		without			
Cover [3]	C016CA*	C025CA*	C032CA*	C040CA*	C050CA*	C063CA*	C050CA*	C063CA*	C080CA*	C100CA*
Cover orifice ①	M5xØ0.8	M5xØ1.0	M5xØ1.2	M5xØ1.5	M6xØ1.8	M6xØ2.0	M6xØ1.8	M6xØ2.0	1/16xØ2.2	1/16xØ2.5
Cover orifice ②	M5xØ00				M6xØ00				1/16xØ00	
Cover orifice ③	M5xØ1.0	M6xØ1.2	M6xØ1.5	M6xØ1.8	M8xØ2.0	M8xØ2.2	M8xØ2.0	M8xØ2.2	M10x1xØ2.5	M10x1xØ3.0
Cover orifice ④	M5xØ99	M6xØ99			M8xØ99C				M10x1xØ99	
Cartridge [4]	CE016C04*	CE025C04*	CE032C04*	CE040C04*	CE050C04*	CE063C04*	CE050C04*	CE063C04*	CE080C04*	CE100C04*
Poppet orifice ⓐ	1/16NPTxØ00									
Spring	1.6 bar, type S									
Bolt kit cover	BK414 4x M8x40	BK391 4x M12x50	BK415 4x M16x55	BK416 4x M20x70	BK417 4x M20x75	BK418 4x M30x100	BK419 8x M24x120	BK509 8x M30x130	BK419 8x M24x120	BK420 8x M30x140
Bolt kit pilot	BK375 4x M5x30						BK385 4x M6x40			

[1] Complete type see chapter "Directional Control Valves", series D1VW, D3W.
[2] NG10-NG06 inclusive O-rings and mounting bolts.
[3] Complete type see ordering code C*C.
[4] Complete type see ordering code CE*.

Shown orifice Ø and springs are recommendations.
xxØ00 = closed bottom NG16 - NG50, plug NG63 - NG100
xxØ99 = open

2-way seat valve with pilot and dampening poppet, normally closed, flow A ⇔ B

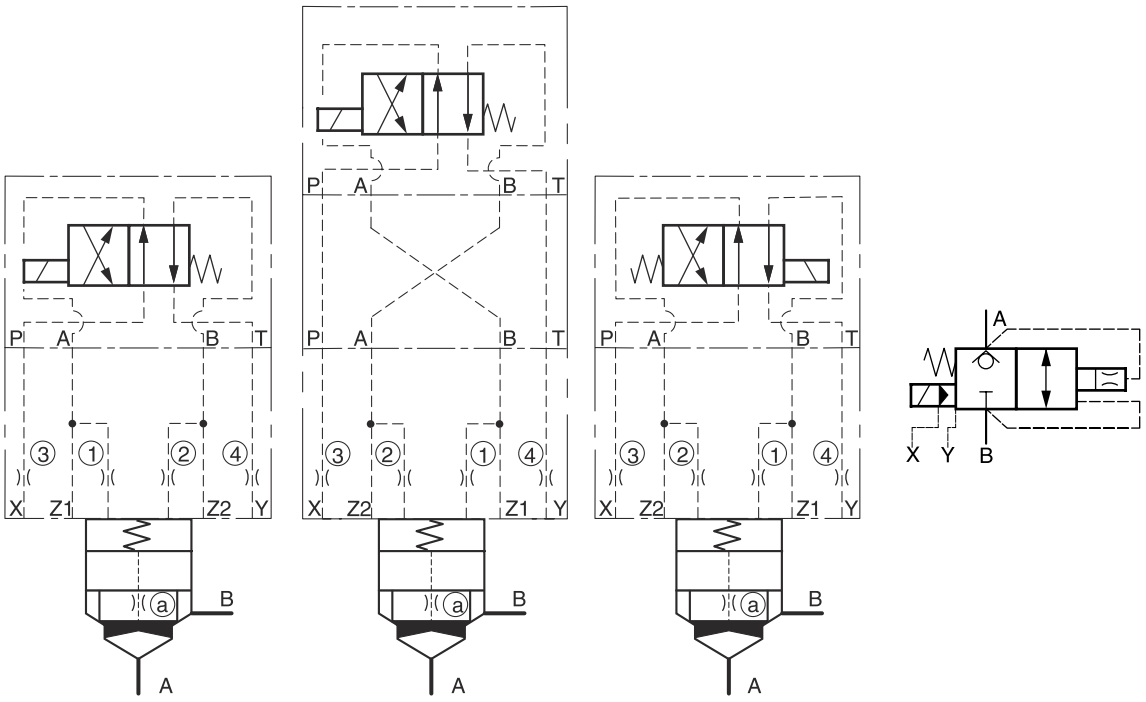

NG16 - 40 with pilot NG06

NG50 - 63 with pilot NG06

NG50 - 100 with pilot NG10

Adaptor plates see chapter 12.

Description	Type									
	Pilot NG06						Pilot NG10			
	NG16	NG25	NG32	NG40	NG50	NG63	NG50	NG63	NG80	NG100
4/2-DC valve [1]	D1VW20B*						D3W20H*			
Adaptor plate [2]	without				PADA1007/A-B/B-A		without			
Cover [3]	C016CA*	C025CA*	C032CA*	C040CA*	C050CA*	C063CA*	C050CA*	C063CA*	C080CA*	C100CA*
Cover orifice ①	M5xØ0.8	M5xØ1.0	M5xØ1.2	M5xØ1.5	M6xØ1.8	M6xØ2.0	M6xØ1.8	M6xØ2.0	1/16xØ2.2	1/16xØ2.5
Cover orifice ②	M5xØ00				M6xØ00				1/16xØ00	
Cover orifice ③	M5xØ1.0	M6xØ1.2	M6xØ1.5	M6xØ1.8	M8xØ2.0	M8xØ2.2	M8xØ2.0	M8xØ2.2	M10x1xØ2.5	M10x1xØ3.0
Cover orifice ④	M5xØ99	M6xØ99			M8xØ99C				M10x1xØ99	
Cartridge [4]	CE016C08*	CE025C08*	CE032C08*	CE040C08*	CE050C08*	CE063C08*	CE050C08*	CE063C08*	CE080C08*	CE100C08*
Poppet orifice ⓐ	1/16NPTxØ00									
Spring	1.6 bar, type S									
Bolt kit cover	BK414 4x M8x40	BK391 4x M12x50	BK415 4x M16x55	BK416 4x M20x70	BK417 4x M20x75	BK418 4x M30x100	BK419 8x M24x120	BK509 8x M30x130	BK419 8x M24x120	BK420 8x M30x140
Bolt kit pilot	BK375 4x M5x30						BK385 4x M6x40			

[1] Complete type see chapter "Directional Control Valves", series D1VW, D3W.
[2] NG10-NG06 inclusive O-rings and mounting bolts.
[3] Complete type see ordering code C*C.
[4] Complete type see ordering code CE*.

Shown orifice Ø and springs are recommendations.
xxØ00 = plug
xxØ99 = open

Check valve, flow A ⇒ B

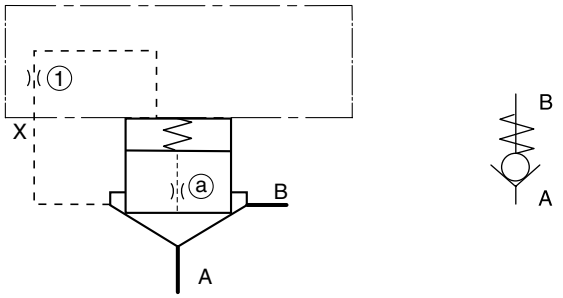

Description	Type							
	NG16	**NG25**	**NG32**	**NG40**	**NG50**	**NG63**	**NG80**	**NG100**
Cover [1]	C016AA*	C025AA*	C032AA*	C040AA*	C050AA*	C063AA*	C080AA*	C100AA*
Cover orifice ①	M5xØ99				M6xØ99		1/16xØ99	
Cartridge [2]	CE016C01*	CE025C01*	CE032C01*	CE040C01*	CE050C01*	CE063C01*	CE080C01*	CE100C01*
Poppet orifice ⓐ	1/16NPTxØ00							
Spring	1.6 bar, type S							
Bolt kit cover	BK414 4x M8x40	BK391 4x M12x50	BK415 4x M16x55	BK416 4x M20x70	BK417 4x M20x75	BK418 4x M30x100	BK419 8x M24x120	BK509 8x M30x130

[1] Complete type see ordering code C*A.
[2] Complete type see ordering code CE*.

Shown orifice Ø and springs are recommendations.
xxØ00 = closed bottom NG16 - NG50, plug NG63 - NG100
xxØ99 = open

8

The 2/2-way seat valves series C10C*E are equipped with an inductive switch to monitor the closed position. The poppet has a 60/40 area ratio (AA = 0.6 AC, AB = 0.4 AC) and is capable for flow in both directions.

The safety overlap of the poppet avoids opening of the valve before the signal of the inductive switch has changed.

For sizes NG80 and NG100 a proximity switch is used.



C10C3E

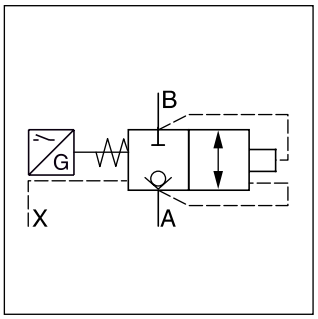

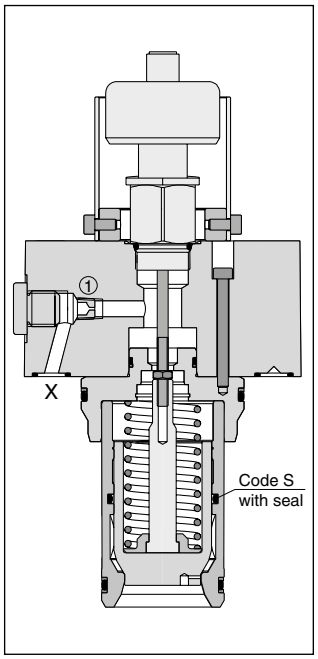

C10C1E

Features

- German trade association certificate No. HSM 16014
- 8 sizes, NG16 up to NG100
- Cover to mount a directional control valve (on the side) for cover 3 (for NG16 to NG63)
- Cavity and mounting pattern acc. to ISO 7368
- Monitored closed position
- Inductive switch CE conform
- Optional with poppet sealing between pilot flow C and port B

Ordering code

C	10	C		E				1	2	3	4		
2/2-way valve	Poppet shape 60/40	Ind. monitoring hydraulic operation	Cover	Slip-in cartridge ISO 7368	Nominal size	Poppet seal	Nominal opening pressure spring	Orifice				Seal	Design series (not required for ordering)

Code	Cover
1	without pilot valve interface
3 [1)]	with pilot valve interface

Code	Nominal size
016	NG16
025	NG25
032	NG32
040	NG40
050	NG50
063	NG63
080	NG80
100	NG100

Code	Poppet seal
C	without
S [2)]	with

Code	Nominal opening pressure spring
L	0.1 bar
N	0.5 bar
S	1.6 bar
T	2.5 bar
U	4.0 bar

Code	Seal
N	NBR
V	FPM

Code	Orifice
ohne	no orifice (2-4 cover 1)
00	Plug
99	open, without orifice

Cover 1

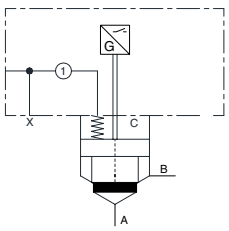

Cover 3

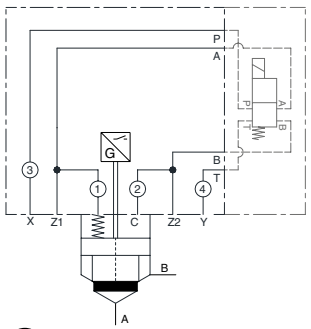

Please order female connector M12x1 separately (order no. 5004109)

[1)] NG16 to NG63. The DC valve is not included in the delivery.
We recommend the following pilot valves: D1VW020BN*W or D1VW020HN*W, depending on the required functionality and plug location.

[2)] Only with spring S, T and U.

◯ Orifices (see 'Accessories')

Note: X modifications are not certified.

Technical data

General									
Design			2-way slip-in cartridge valves ISO 7368						
Size			**NG16**	**NG25**	**NG32**	**NG40**	**NG50**	**NG63**	**NG80**	**NG100**
Mounting position			unrestricted							
Operation			hydraulic							
Ambient temperature		[C°]	-20...+60							
$MTTF_D$ value		[years]	150							
Weight		[kg]	1.5	2.7	4.3	7.4	12	23	53	89
Hydraulic										
Max. operating pressure		[bar]	350							
Nominal flow Δp 5 bar		[l/min]	230	400	800	1250	1625	3400	5000	7500
Fluid			Hydraulic oil according to DIN 51524							
Fluid temperature		[C°]	-20...+70 (NBR: -25...+70)							
Viscosity,	permitted	[cSt] / [mm²/s]	20...400							
	recommended	[cSt] / [mm²/s]	30...80							
Filtration			ISO 4406 (1999); 18/16/13							
Control volume at max. stroke		[cm³]	2.03	6.45	12.21	20.32	39.40	94.56	218	374
Control surface (surface C = 100 %) A/B		[%]	approx. 60 / 40 related on surface C							
Opening pressure										
	flow direction A—>B	[bar]	Spring: L = 0.2; N = 0.9; S = 2.7; T = 4.0; U = 6.6							
	flow direction B—>A	[bar]	Spring: L = 0.3; N = 1.3; S = 4.0; T = 6.3; U = 10.0							
Electrical (Inductive switch)			See position control							

Δp/Q performance curve

(without spring and poppet seal, C-chamber unloaded)

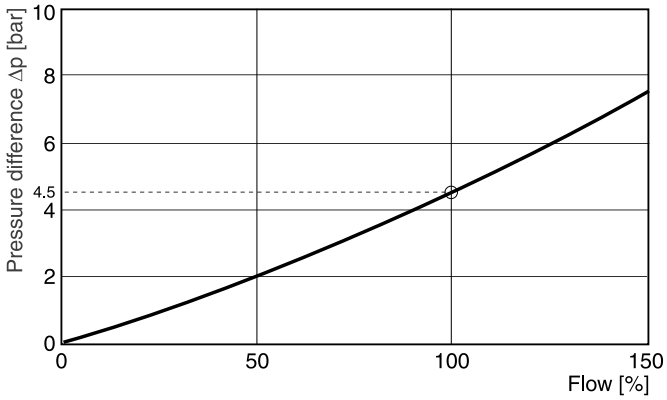

Characteristic curve measured with HLP46 at 50 °C.

Recommended orifice diameter

Cover	Orifice	NG16	NG25	NG32	NG40	NG50	NG63	NG80	NG100
C10C1E	No.: 1	1/16 NPT	1/16 NPT	1/16 NPT	1/8 NPT	1/8 NPT	1/8 NPT	1/8 NPT	1/8 NPT
C10C3E	No.: 1, 2, 3, 4	M5	M6	M6	M6	M8	M8	n/a	n/a
Inlet orifice		Ø 0.8	Ø 1.2	Ø 1.5	Ø 2.0	Ø 2.5	Ø 3.0	Ø 3.0	Ø 3.0

Depending on function, plugs must be used (code00).

Dimensions C10C1E

NG16 to NG63 [1)]

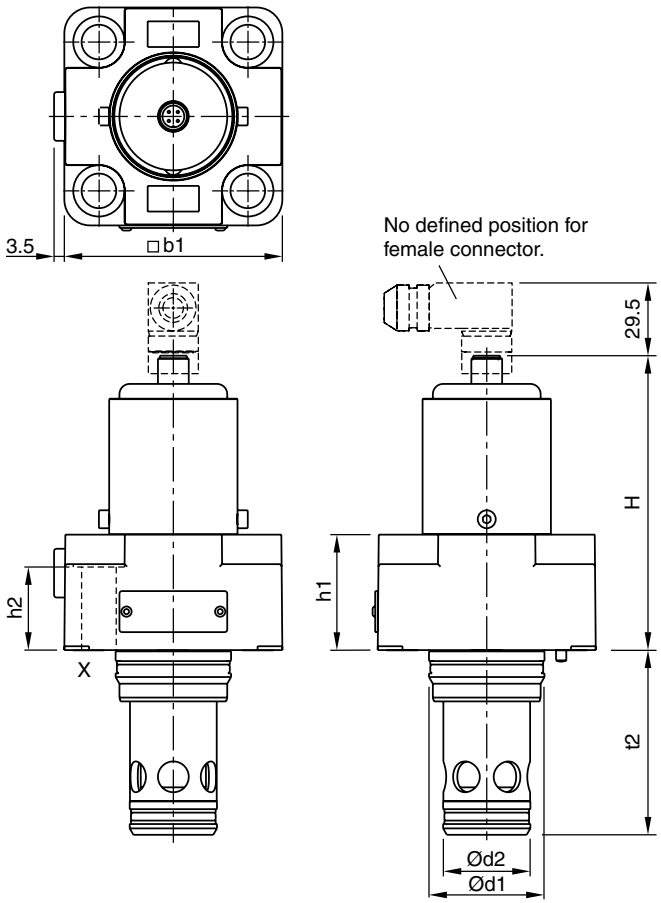

Cavity and mounting pattern acc. to ISO 7368

NG	H	h	h2	b1	d1	d2	t +0.1
16	107	36	28	65	32	25	56
25	116	45	32.5	85	45	34	72
32	122	50	32	102	60	45	85
40	131	60	40	125	75	55	105
50	141	70	45	140	90	68	122
63	156	85	55	180	120	90	155
80	195	105	80	250	145	110	205
100	210	120	89	300	180	135	245

NG80 to NG100 [1)]

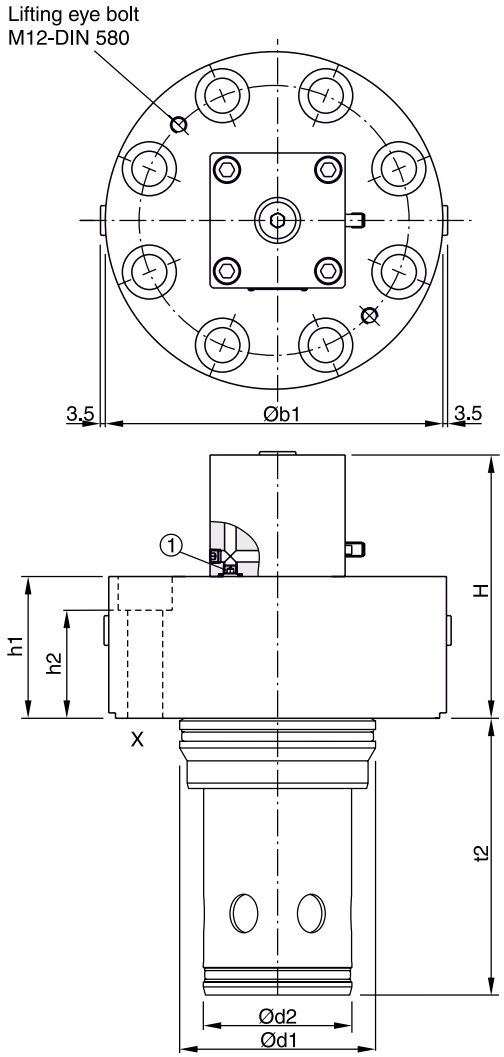

The space necessary to remove the M12x1 female connector is at least 22 mm.

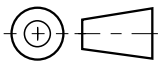

Seal and bolt kits

Nominal size		16	25	32	40	50	63	80	100
Seal kit	FPM	SK-C10C1E16V	SK-C10C1E25V	SK-C10C1E32V	SK-C10C1E40V	SK-C10C1E50V	SK-C10C1E60V	SK-C10C1E80V	SK-C10C1E100V
	NBR	SK-C10C1E16N	SK-C10C1E25N	SK-C10C1E32N	SK-C10C1E40N	SK-C10C1E50N	SK-C10C1E60N	SK-C10C1E80N	SK-C10C1E100N
Bolt kit [ISO 4762-12.9]		BK414 4x M8x40	BK391 4x M12x50	BK415 4x M16x55	BK416 4x M20x70	BK417 4x M20x75	BK418 4x M30x100	BK419 8x M24x120	BK420 8x M30x140
Recommended torque [Nm]		31.8	108	264	517	517	1775	890	1775

Attention!
The switch may only be adjusted by the valve manufacturer. The exchange of individual modules is not permitted.

[1)] Please order female connector M12x1 separately (see accessories directional control valves, female connector M12x1 (order no.: 5004109).

Dimensions C10C3E

NG16 to NG50 [1)]
Pilot valve interface NG06.

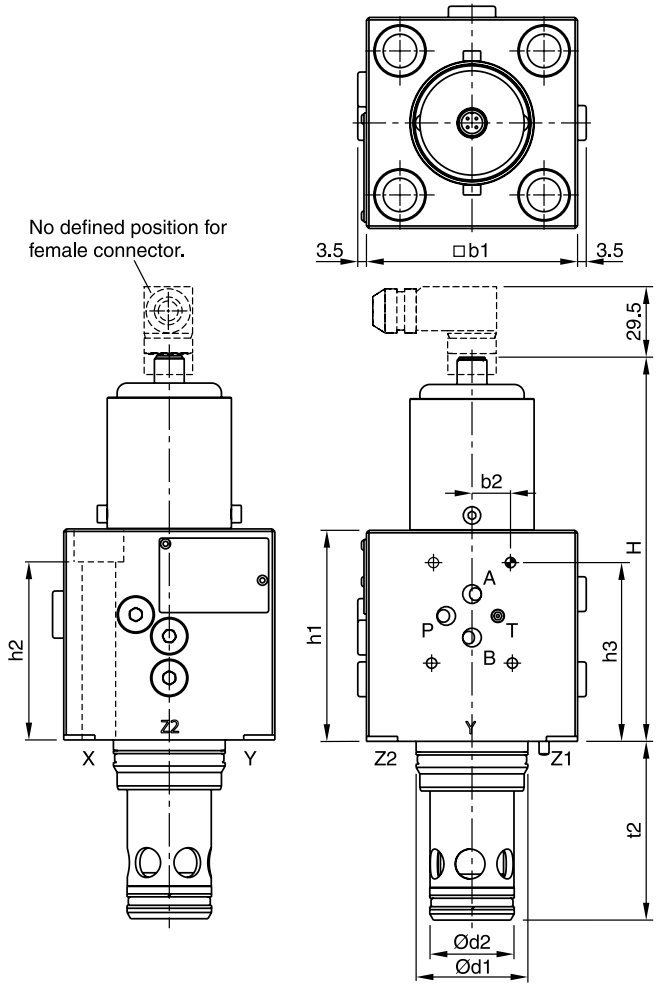

Cavity and mounting pattern acc. to ISO 7368

NG63 [1)]
Pilot valve interface NG10.

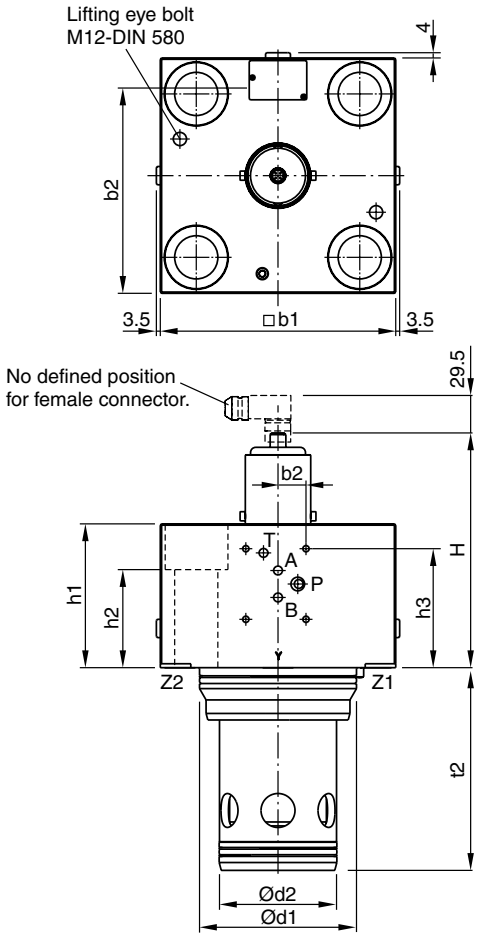

Cavity and mounting pattern acc. to ISO 7368

NG	H	h1	h2	h3	b1	b2	d1	d2	t2
16	156	85	76	72	65	15.5	31	25	56
25	156	85	70	72	85	15.5	45	34	72
32	156	85	56	72	102	15.5	60	45	85
40	156	85	50	72	125	15.5	75	55	105
50	156	85	60	72	140	15.5	90	68	122
63	181	110	75	91	180	21.5	120	90	155

The space necessary to remove the M12x1 female connector is at least 22 mm.

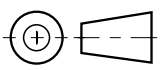

Seal and bolt kits

Nominal size		16	25	32	40	50	63
Seal kit	FPM	SK-C10C3E16V	SK-C10C3E25V	SK-C10C3E32V	SK-C10C3E40V	SK-C10C3E50V	SK-C10C3E63V
	NBR	SK-C10C3E16N	SK-C10C3E25N	SK-C10C3E32N	SK-C10C3E40N	SK-C10C3E50N	SK-C10C3E63N
Bolt kit [ISO 4762-12.9]		BK533 4x M8x90	BK532 4x M12x90	BK526 4x M16x80	BK527 4x M20x80	BK534 4x M20x90	BK536 4x M30x120
Recommended torque ± 15%	[Nm]	31.8	108	264	517	517	1775

Attention!
The switch may only be adjusted by the valve manufacturer. The exchange of individual modules is not permitted.

[1)] Please order female connector M12x1 separately (see accessories directional control valves, female connector M12x1 (order no.: 5004109).

German trade association certificate

Bescheinigung
Nr. **HSM 16014**
vom 08.06.2016

DGUV Test
Prüf- und Zertifizierungsstelle
Hebezeuge, Sicherheitskomponenten
und Maschinen
Fachbereich Holz und Metall

Baumusterprüfbescheinigung

Name und Anschrift des Bescheinigungsinhabers: (Auftraggeber)	Parker Hannifin GmbH Gutenbergstr. 38 41564 Kaarst
Produktbezeichnung:	**2/2-Wegesitzventil mit Überwachung**
Typ:	C10C1 E "NG" mit "NG" 16/25/32/40/50/63/80/100 C10C3 E "NG" mit "NG" 16/25/32/40/50/63/80/100
Prüfgrundlage:	- GS-HSM-20 "Spritzgießmaschinen", 04/2015 - EN 201:2009 "Gummi- und Kunststoffmaschinen - Spritzgießmaschinen - Sicherheitsanforderungen"
Zugehöriger Prüfbericht:	Nr. 014/2016 vom 27.05.2016
Weitere Angaben:	Bestimmungsgemäße Verwendung: Zur Verwendung für hydraulische Schließsicherungen in Spritzgießmaschinen gemäß Herstellereinbauanleitung Bemerkungen: Das jeweilige Ventil ist gemäß Kapitel 5 der EN 201:2009 "Gummi- und Kunststoffmaschinen - Spritzgießmaschinen - Sicherheitsanforderungen" von der Steuerung der Spritzgießmaschine selbsttätig zu überwachen, so dass auch bei Versagen des Positionsschalter ein erneuter Maschinenzyklus nicht mehr eingeleitet werden kann. Das Ventil ist vom Hersteller eingestellt und darf nur vollständig getauscht werden.

Das geprüfte Baumuster entspricht den einschlägigen Bestimmungen der Richtlinie 2006/42/EG **(Maschinen)**.
Diese Bescheinigung ist gültig bis: **07.06.2021**
Die Baumusterprüfbescheinigung berechtigt nicht zur Nutzung eines Prüfzeichens.
Weiteres über die Gültigkeit, eine Gültigkeitsverlängerung und andere Bedingungen regelt die Prüf- und Zertifizierungsordnung.

Dipl.-Ing. Berthold Heinke
Leiter der Prüf- und Zertifizierungsstelle

PZB10 11.14 Deutsche Gesetzliche Unfallversicherung (DGUV) e. V.
Spitzenverband der gewerblichen Berufsgenossenschaften und der Unfallversicherungsträger der öffentlichen Hand
Vereinsregister-Nr. VR 751 B, Amtsgericht Charlottenburg

DGUV Test Prüf- und Zertifizierungsstelle Hebezeuge, Sicherheitskomponenten und Maschinen • Fachbereich Holz und Metall
Kreuzstraße 45 • 40210 Düsseldorf • Deutschland
Telefon: +49 (0) 211 8224-16910 • Fax: +49 (0) 211 8224-26910

DAkkS Deutsche Akkreditierungsstelle D-ZE-17009-34-01

Electrical characteristics of position control M12x1 as per IEC 61076-2-101, NG16 to NG63

Supply voltage	[VDC]	24
Tolernace supply voltage	[%]	±20
Ripple supply voltage	[%]	≤10
Polarity protection	[V]	300
Current consumption without load	[mA]	≤20
Switching hysteresis	[mm]	<0.06
Max. output current per channel, ohmic	[mA]	250
Ambient temperature	[°C]	-20 … +60
Protection		IP65 acc. EN 60529
CE conform [1)]		EN 61000-4-2 / EN 61000-4-4 / EN 61000-4-6 1) / ENV 50140 / ENV 50204
Min. distance to next AC solenoid	[m]	0.1
Interface		M12x1 to IEC 61076-2-101

M12 pin assignment

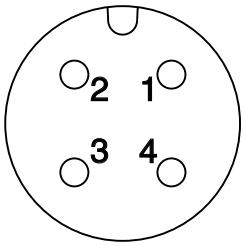

1 + U_S 19.2...28.8 V
2 Out B: normally open
3 0V
4 Out A: normally closed

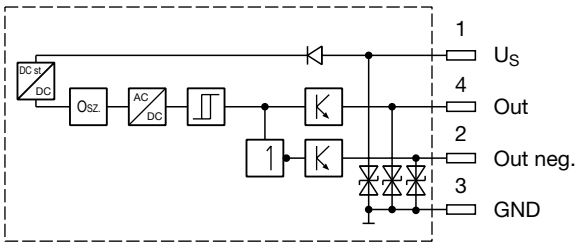

Outputs: Open collector

8

Please order plug M12x1 separately (see accessories directional control valves, plug M12x1; order no.: 5004109)

[1)] Only guaranted with screened cable and female connector

Electrical characteristics of position control M12x1 as per IEC 61076-2-101, NG80 to NG100

Protection class		IP65 in accordance with EN 60529 (with correctly mounted plug-in connector)
Ambient temperature	[°C]	-20...+60
Supply voltage U_S / ripple	[V]	10...30 / 10 %
Current consumption without load	[mA]	≤ 10
Max. output current per channel, ohmic	[mA]	200
Min. output load per channel, ohmic	[kOhm]	100
Max. output drop at 0.2 A	[V]	≤ 2
EMC		EN61000-6-4 / EN61000-6-2
Min. distance to next AC solenoid	[m]	>0.1
Interface		M12x1
Wiring min.	[mm²]	3 x 0.14 braid shield recommended
Wiring length max.	[m]	50 recommended

M12 pin assignment

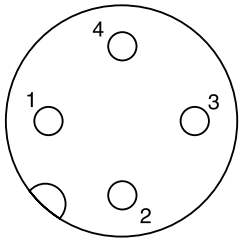

1 + U_S 10...30 V
2 Out A: not connected
3 0V
4 Out A: normally closed

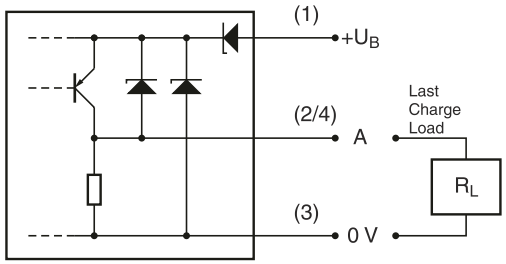

Please order plug M12x1 separately. Straight plug recommended – no defined position possible for angled plug.

8

Definition

Start position monitored:

The switching point of the inductive switch is within the overlap of the poppet.

After the signal of the inductive switch has changed, the poppet leaves the safety overlapping position.

The series of active pilot operated 2/2-way cartridge valves TDW enables to open and close the main poppet solely by pilot pressure, independent of pressure build-up in the main ports A and B.

The main poppet is designed hollow and mostly pressure balanced. The operation is accomplished via minimal control surfaces resulting in low pilot oil demand and fast switching operations.

TDW is supplied as one unit to ensure easy installation – sleeve and body are screwed together. Additionally, the lower recess in the standardized mounting cavity is no longer required, providing the possibility to minimize pressure losses in the manifold block.

Features

- Active pilot operated 2/2-way cartridge valves
- Cavity and mounting pattern according to ISO 7368
- Flow direction B to A and A to B
- 7 sizes NG25 up to NG100
- Position monitoring optional
- Stroke limiter optional



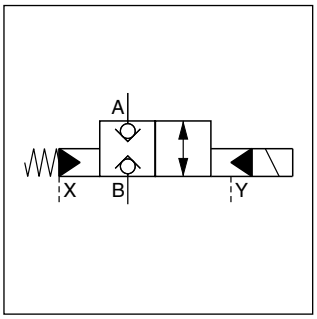

TDW025

Function symbols

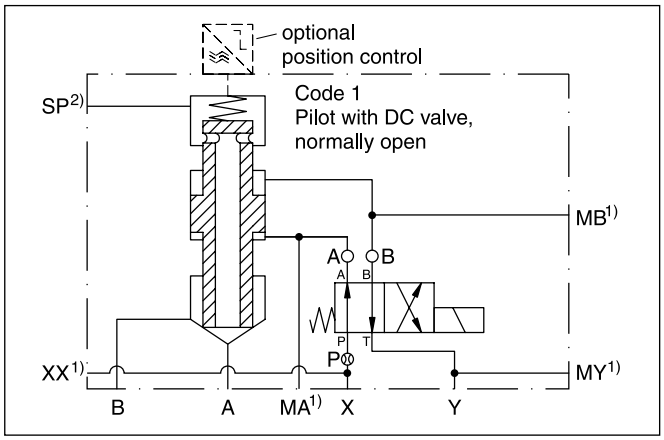

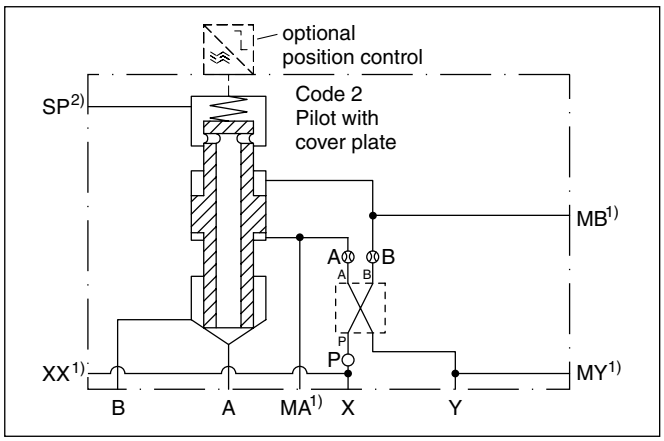

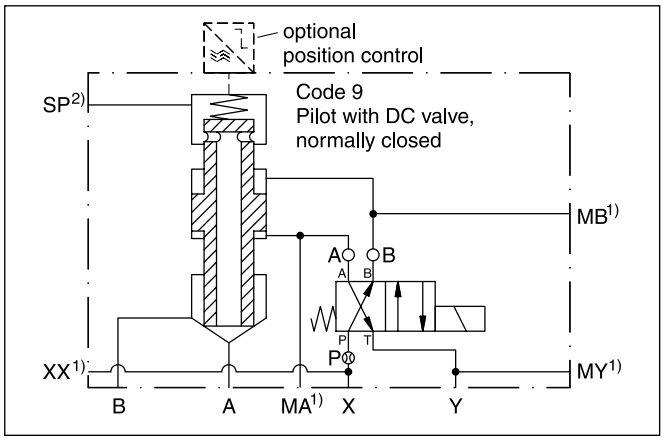

TDW040

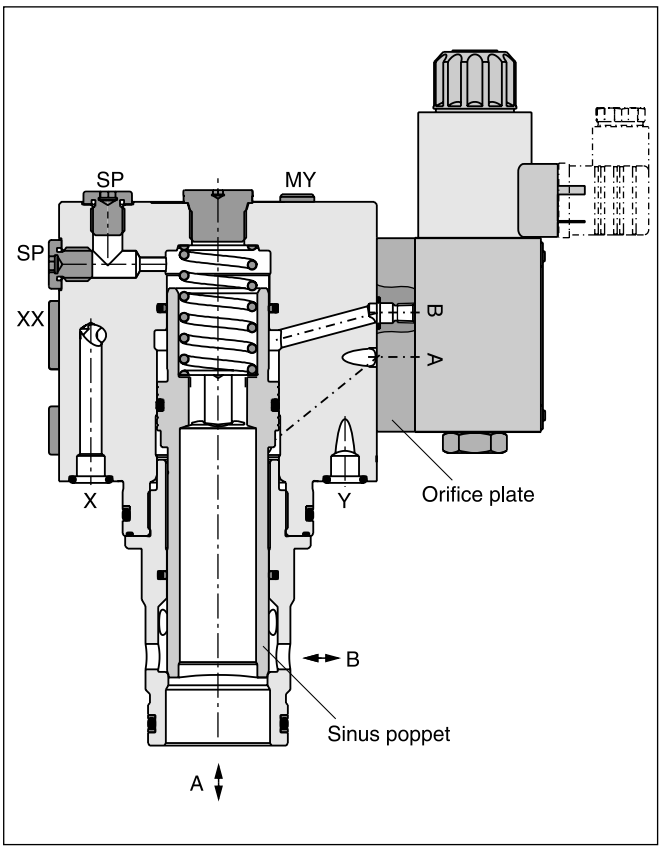

1) NG25 and NG32 without accu port XX and without ports MA, MB and MY.
2) NG25 without suction port SP.

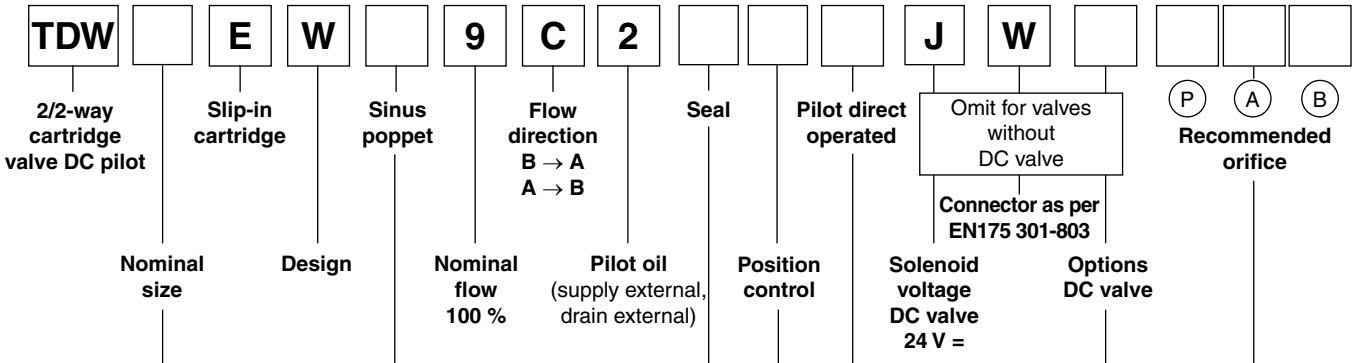

Code	Nominal size
025	NG25
032	NG32
040	NG40
050	NG50
063	NG63
080	NG80
100	NG100

Code	Poppet shape
1 [1]	1:1 standard
8 [2]	with overlap

Code	Seal
N	NBR
V	FPM

Code	Position control
0	w/o position control
2 [3]	Stroke limiter
8 [4]	Start position monitored

Code	Pilot [5]
0	w/o DC valve
1	with DC valve, normally open
2	with cover plate X = closing Y = opening
9	with DC valve, normally closed

Pilot with DC valve	
Code [6]	Nominal size
129999	NG25, NG32
159999	NG40
189999	NG50
209999	NG63
259999	NG80
309999	NG100
Pilot with cover plate	
Code	Nominal size
991212	NG25, NG32
991515	NG40
991818	NG50
992020	NG63
992525	NG80
993030	NG100

Code	Options
0	Standard
T	without manual override

8

[1] Not for start position monitored, Code 8.
[2] Only in combination with start position monitored, code 8).
[3] Only for NG25 to NG63.
[4] Please order female connector M12x1 separately (see accessories directional control valves, female connector M12x1 (order no.: 5004109).
[5] German trade association certificate only legal for pilot options 0 and 2.
[6] Example code 129999: 12 = dia. 1.2 mm, 99 = without orifice.

General								
Design		2-way slip-in cartridge valve according to ISO 7368						
Nominal size	DIN	**NG25**	**NG32**	**NG40**	**NG50**	**NG63**	**NG80**	**NG100**
Mounting position		unrestricted						
Ambient temperature	[°C]	-20...+60						
$MTTF_D$ value	[years]	75						
Weight	[kg]	8	10	12	23	49	102	154
Hydraulic								
Max. operating pressure	[bar]	Ports A, B, X up to 350, port Y: max. 210 (350 bar with cover plate)						
Fluid		Hydraulic oil according to DIN 51524						
Fluid temperature	[°C]	-25...+70 (NBR: -25...+60)						
Viscosity permitted	[cSt] / [mm²/s]	20...400						
Viscosity recommended	[cSt] / [mm²/s]	30...80						
Filtration		ISO 4406 (1999); 18/16/13						
Nominal flow at Δp = 5 bar	[l/min]	420	850	1500	1900	3600	4500	8000
Recommended max. flow	[l/min]	800	2000	3000	4500	8000	13000	20000
Flow direction		B to A / A to B						
Pilot pressure	[bar]	must be as high as system pressure						
Overlap (for poppet code 8)	[mm]	3.7	3.7	3.7	3.7	3.7	3.7	3.7
Electrical characteristics								
Duty ratio		100 % ED; CAUTION: coil temperature up to 150 °C possible						
Protection class		IP 65 in accordance with EN 60529 (with correctly mounted plug-in connector)						
	Code	J						
Supply voltage	[V]	24 V =						
Tolerance supply voltage	[%]	±10						
Current consumption hold	[A]	1.29						
Current consumption in rush	[A]	1.29						
Power consumption hold		31 W						
Power consumption in rush		31 W						
Solenoid connection		Connector as per EN 175301-803, solenoid identification as per ISO 9461 (code W).						
Wiring min.	[mm²]	3 x 1.5 recommended						
Wiring length max.	[m]	50 recommended						

8

With electrical connections the protective conductor (PE ⏚) must be connected according to the relevant regulations.

p/Q Performance curves (sinus poppet code 1 and 8)

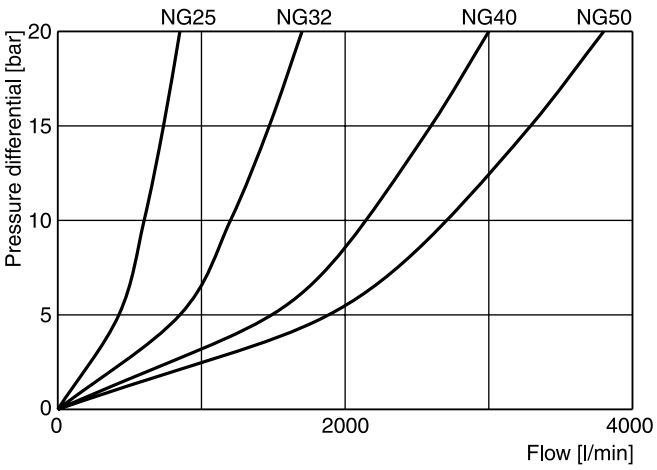

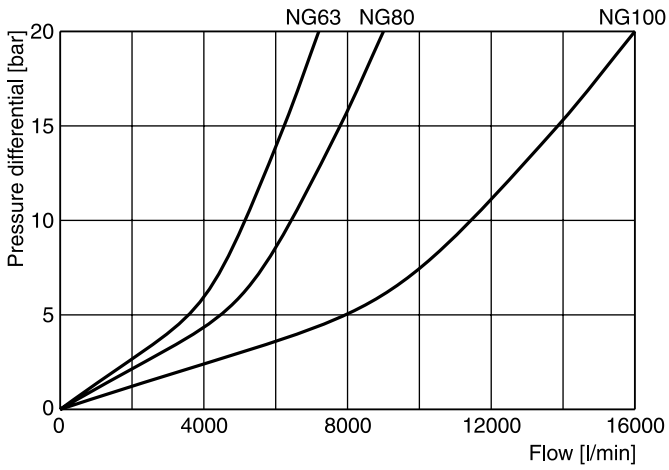

All characteristic curves measured with HLP46 at 50 °C.

Electrical characteristics of position control M12x1 as per IEC 61076-2-101, NG25 to NG100

Supply voltage	[VDC]	24
Tolernace supply voltage	[%]	±20
Ripple supply voltage	[%]	≤10
Polarity protection	[V]	300
Current consumption without load	[mA]	≤20
Switching hysteresis	[mm]	<0.06
Max. output current per channel, ohmic	[mA]	250
Ambient temperature	[°C]	-20 … +60
Protection		IP65 acc. EN 60529 (with correctly mounted plug-in connector)
Min. distance to next AC solenoid	[m]	0.1
Interface		M12x1 to IEC 61076-2-101
CE conform		EN 61000-4-2 / EN 61000-4-4 / EN 61000-4-6 [1] / ENV 50140 / ENV 50204

[1] Only guaranted with screened cable and female connector

M12 pin assignment

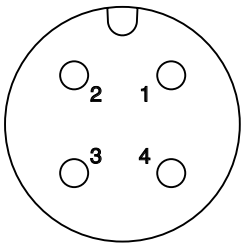

1 + U_S 19.2...28.8 V
2 Out B: normally open
3 0V
4 Out A: normally closed

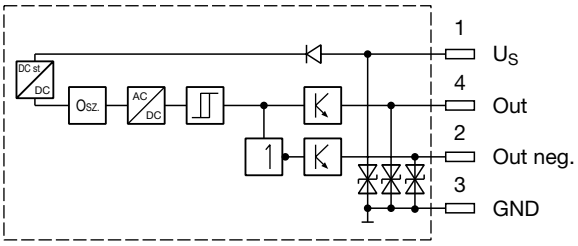

Outputs: Open collector

8

Please order female connector M12x1 separately (see accessories directional control valves, female connector M12x1 (order no.: 5004109).

German trade association certificate

(only valid for pilot options 0 and 2)

Bescheinigung
Nr. **HSM 16015**
vom 08.06.2016

DGUV Test
Prüf- und Zertifizierungsstelle
Hebezeuge, Sicherheitskomponenten
und Maschinen
Fachbereich Holz und Metall

Baumusterprüfbescheinigung

Name und Anschrift des Bescheinigungsinhabers: (Auftraggeber)	Parker Hannifin GmbH Gutenbergstr. 38 41564 Kaarst
Produktbezeichnung:	**2/2-Wegesitzventil mit Überwachung, aktiv gesteuert**
Typ:	TDW "NG" EW89C 2/8 N/V 8 0/2 mit "NG" 25/32/40/50/63/80/100/125
Prüfgrundlage:	- GS-HSM-20 "Spritzgießmaschinen", 04/2015 - EN 201:2009 "Gummi- und Kunststoffmaschinen - Spritzgießmaschinen - Sicherheitsanforderungen"
Zugehöriger Prüfbericht:	Nr. 014/2016 vom 27.05.2016
Weitere Angaben:	Bestimmungsgemäße Verwendung: Zur Verwendung für hydraulische Schließsicherungen in Spritzgießmaschinen gemäß Herstellereinbauanleitung Bemerkungen: Das jeweilige Ventil ist gemäß Kapitel 5 der EN 201:2009 "Gummi- und Kunststoffmaschinen - Spritzgießmaschinen - Sicherheitsanforderungen" von der Steuerung der Spritzgießmaschine selbsttätig zu überwachen, so dass auch bei Versagen des Positionsschalter ein erneuter Maschinenzyklus nicht mehr eingeleitet werden kann. Das Ventil ist vom Hersteller eingestellt und darf nur vollständig getauscht werden.

Das geprüfte Baumuster entspricht den einschlägigen Bestimmungen der Richtlinie 2006/42/EG **(Maschinen).**
Diese Bescheinigung ist gültig bis: **07.06.2021**
Die Baumusterprüfbescheinigung berechtigt nicht zur Nutzung eines Prüfzeichens.
Weiteres über die Gültigkeit, eine Gültigkeitsverlängerung und andere Bedingungen regelt die Prüf- und Zertifizierungsordnung.

Dipl.-Ing. Berthold Heinke
Leiter der Prüf- und Zertifizierungsstelle

PZB10 11.14 Deutsche Gesetzliche Unfallversicherung (DGUV) e. V.
Spitzenverband der gewerblichen Berufsgenossenschaften
und der Unfallversicherungsträger der öffentlichen Hand
Vereinsregister-Nr. VR 751 B, Amtsgericht Charlottenburg

DGUV Test Prüf- und Zertifizierungsstelle Hebezeuge, Sicherheitskomponenten und Maschinen • Fachbereich Holz und Metall
Kreuzstraße 45 • 40210 Düsseldorf • Deutschland
Telefon: +49 (0) 211 8224-16910 • Fax: +49 (0) 211 8224-26910

DAkkS Deutsche Akkreditierungsstelle D-ZE-17009-34-01

Control surfaces

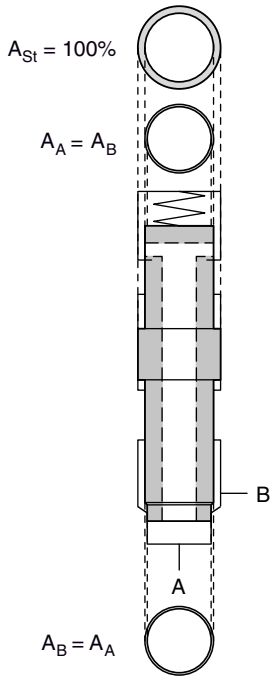

NG	Pilot oil volume for full stroke [cm³]	A_{ST} [%]	Standard poppet 1 A_B / A_{ST} [%]	Overlapped poppet 8 A_B / A_{ST} [%]
25	4.7	100	0	10.6
32	5.3	100	0	10.9
40	8.3	100	0	11.2
50	12.9	100	0	11.5
63	18.9	100	0	11.7
80	28.5	100	0	11.8
100	35.3	100	0	12.0

The 1:1 standard poppet (Code 1) is pressure balanced. The overlapped poppet (Code 8) shows smaller areas A_A respectively A_B.

E.g. for NG100

A_{Nom} = 7854 mm² = 600 %
A_{St} = 1307 mm² = 100 %
A_A=A_B = 157 mm² = 12 %

Dimensions NG25

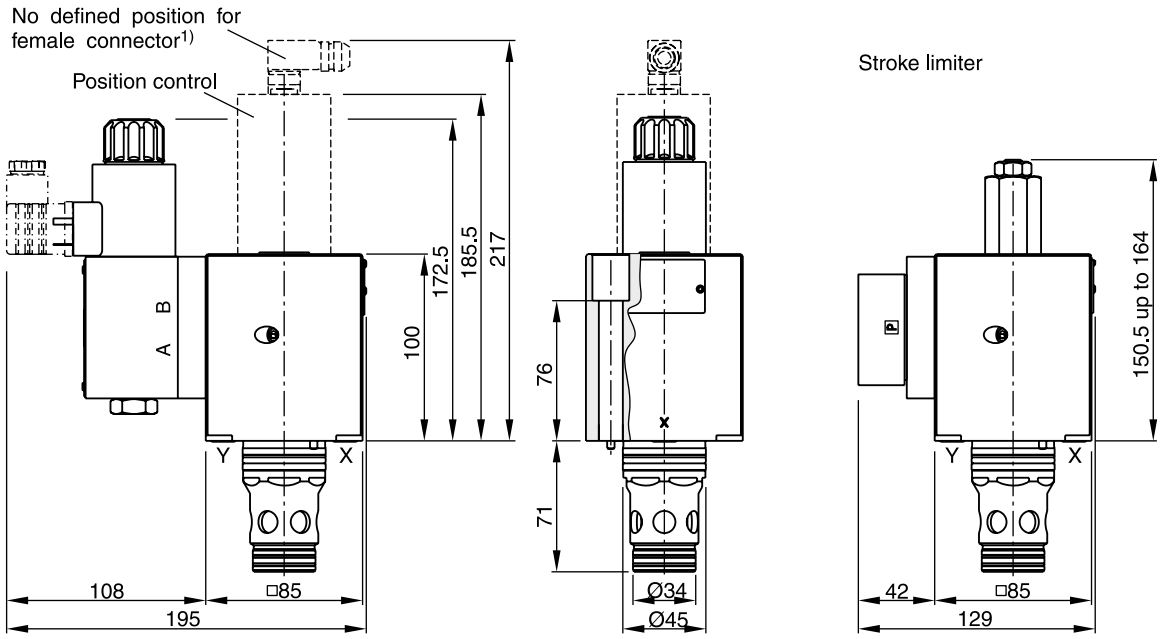

Note:
Accu port XX and suction port SP non-existent

NG	Bolt kit		Kit NBR	Kit FPM
25	BK504 4x M12x100 ISO 4762-12.9	108 Nm	SK-TDW025EN	SK-TDW025EV

1) Please order female connector M12x1 separately (see accessories directional control valves, female connector M12x1 (order no.: 5004109).

NG32

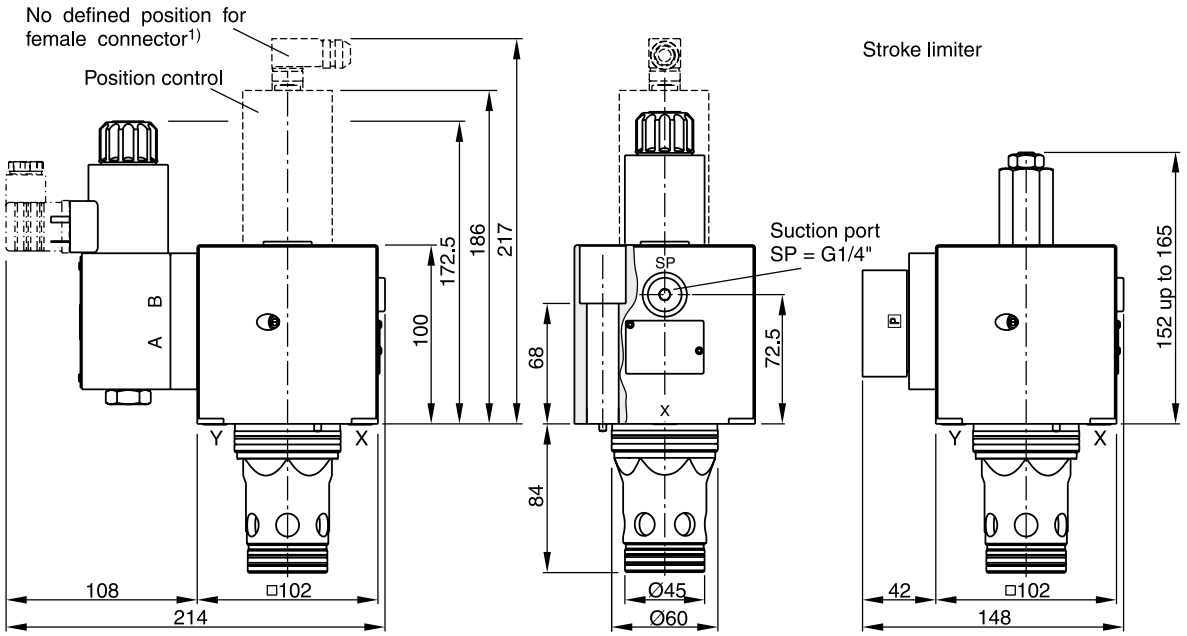

Note:
Accu port XX non-existent

NG40

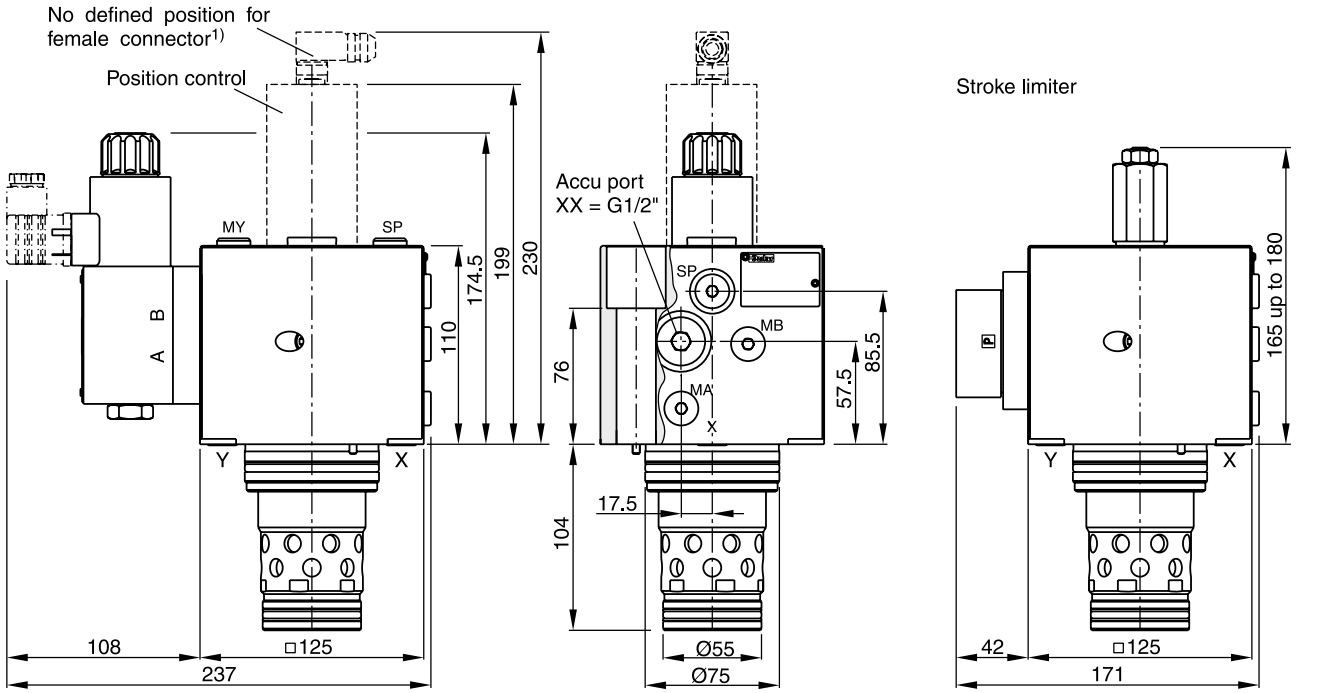

Suction port SP = G1/4"
Ports MA and MB = G1/4"

NG	Bolt kit		Kit NBR	Kit FPM
32	BK529 4 x M16x100 ISO 4762-12.9	264 Nm	SK-TDW032EN	SK-TDW032EV
40	BK481 4 x M20x110 ISO 4762-12.9	517 Nm	SK-TDW040EN	SK-TDW040EV

1) Please order female connector M12x1 separately (see accessories directional control valves, female connector M12x1 (order no.: 5004109).

NG50

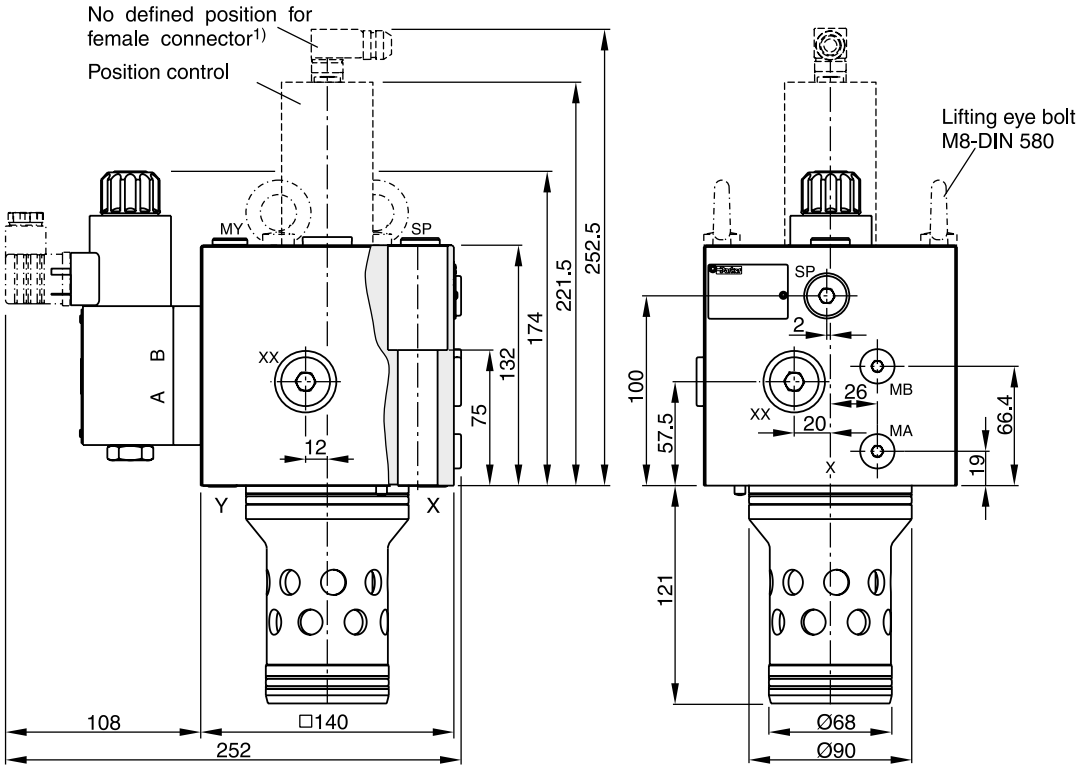

Lifting thread for disassembly M12

Stroke limiter

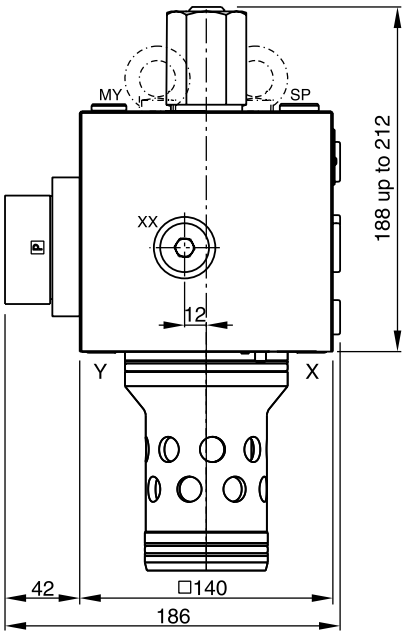

Suction port
SP = G3/8"

Accu port
XX = G1/2"

Ports
MA and MB = G1/4"

NG	Bolt kit		Kit NBR	Kit FPM
50	BK481 4 x M20x110 ISO 4762-12.9	517 Nm	SK-TDW050EN	SK-TDW050EV

[1)] Please order female connector M12x1 separately (see accessories directional control valves, female connector M12x1 (order no.: 5004109).

NG63

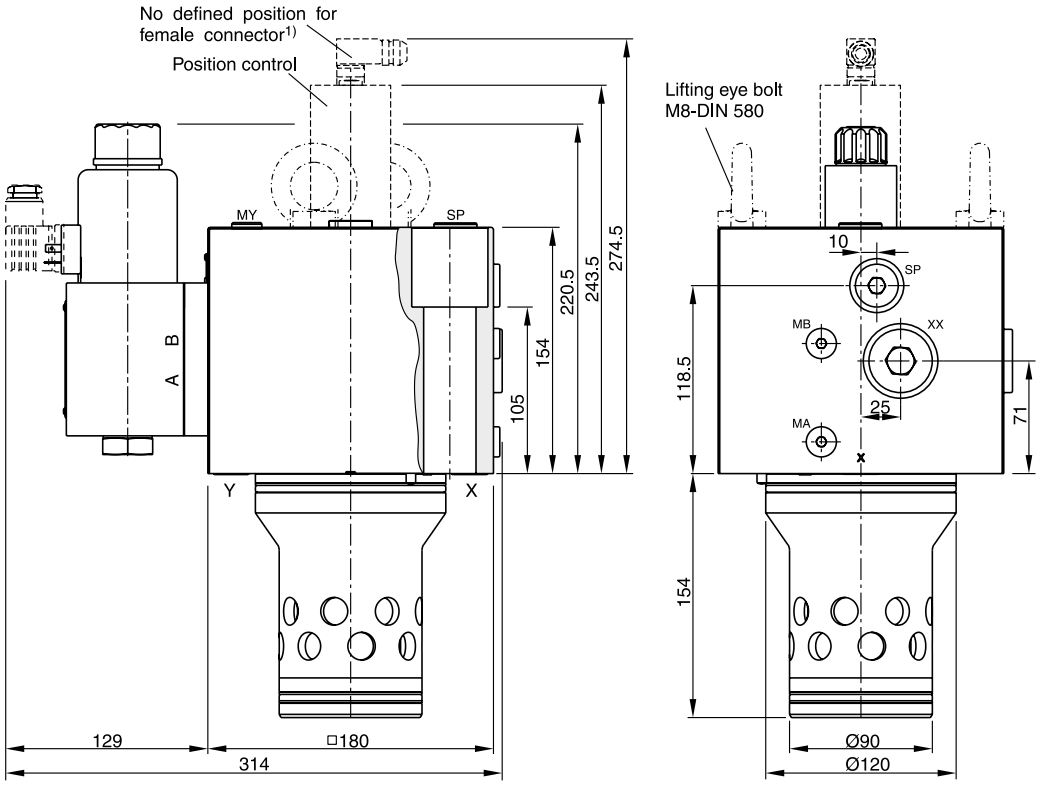

Lifting thread for disassembly M12

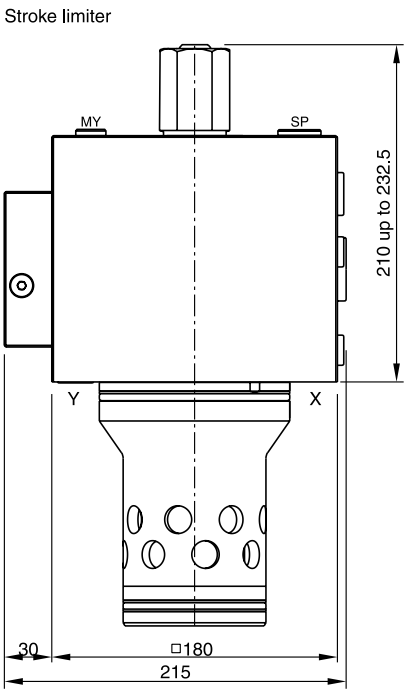

Suction port
SP = G1/2"

Accu port
XX = G3/4"

Ports
MA and MB = G1/4"

NG	Bolt kit		Kit NBR	Kit FPM
63	BK518 4 x M30x160 ISO 4762-12.9	1775 Nm	SK-TDW063EN	SK-TDW063EV

1) Please order female connector M12x1 separately (see accessories directional control valves, female connector M12x1 (order no.: 5004109).

NG80

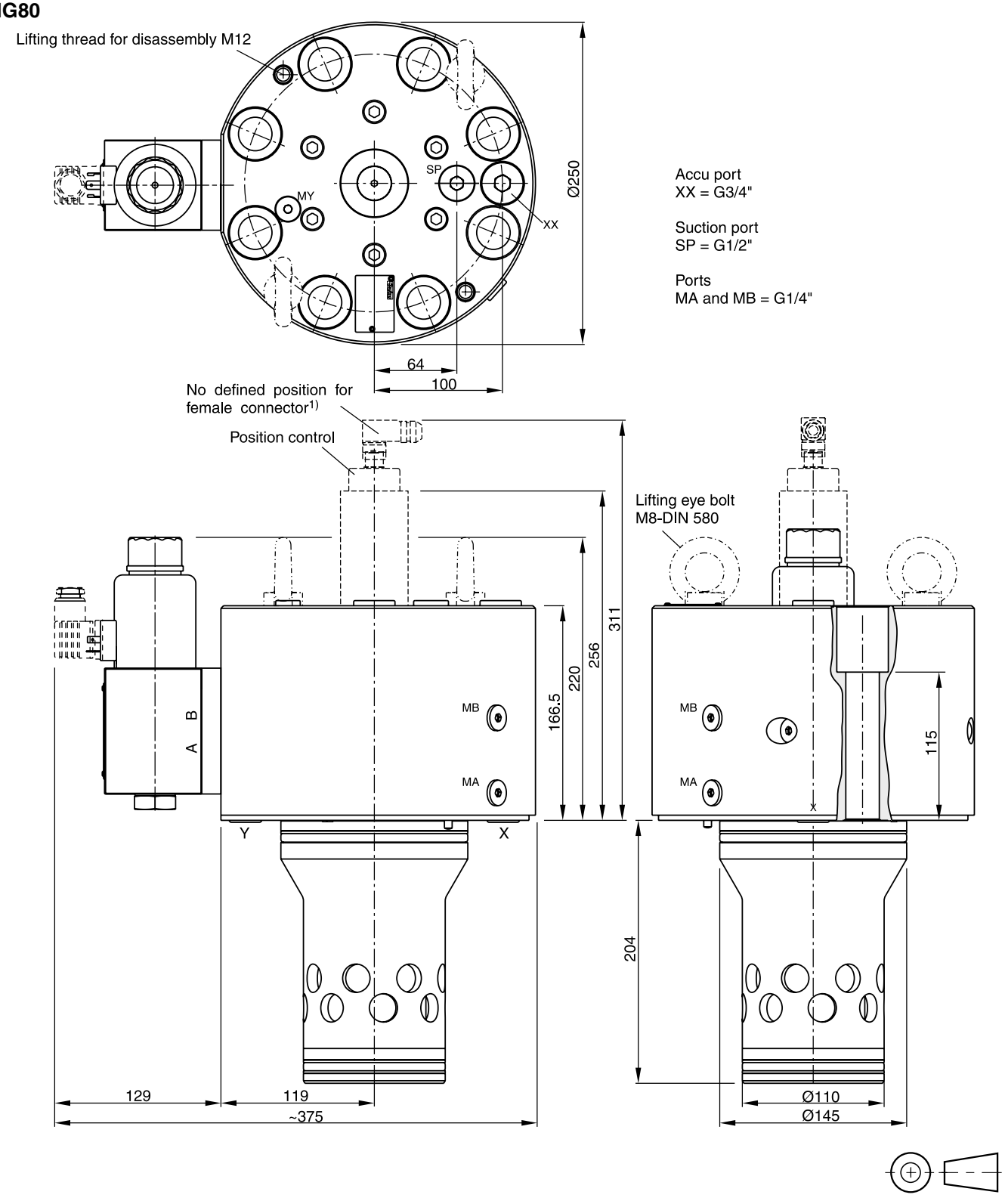

NG	Bolt kit		Kit NBR	Kit FPM
80	BK530 8x M24x160 ISO 4762-12.9	890 Nm	SK-TDW080EN	SK-TDW080EV

1) Please order female connector M12x1 separately (see accessories directional control valves, female connector M12x1 (order no.: 5004109).

NG100

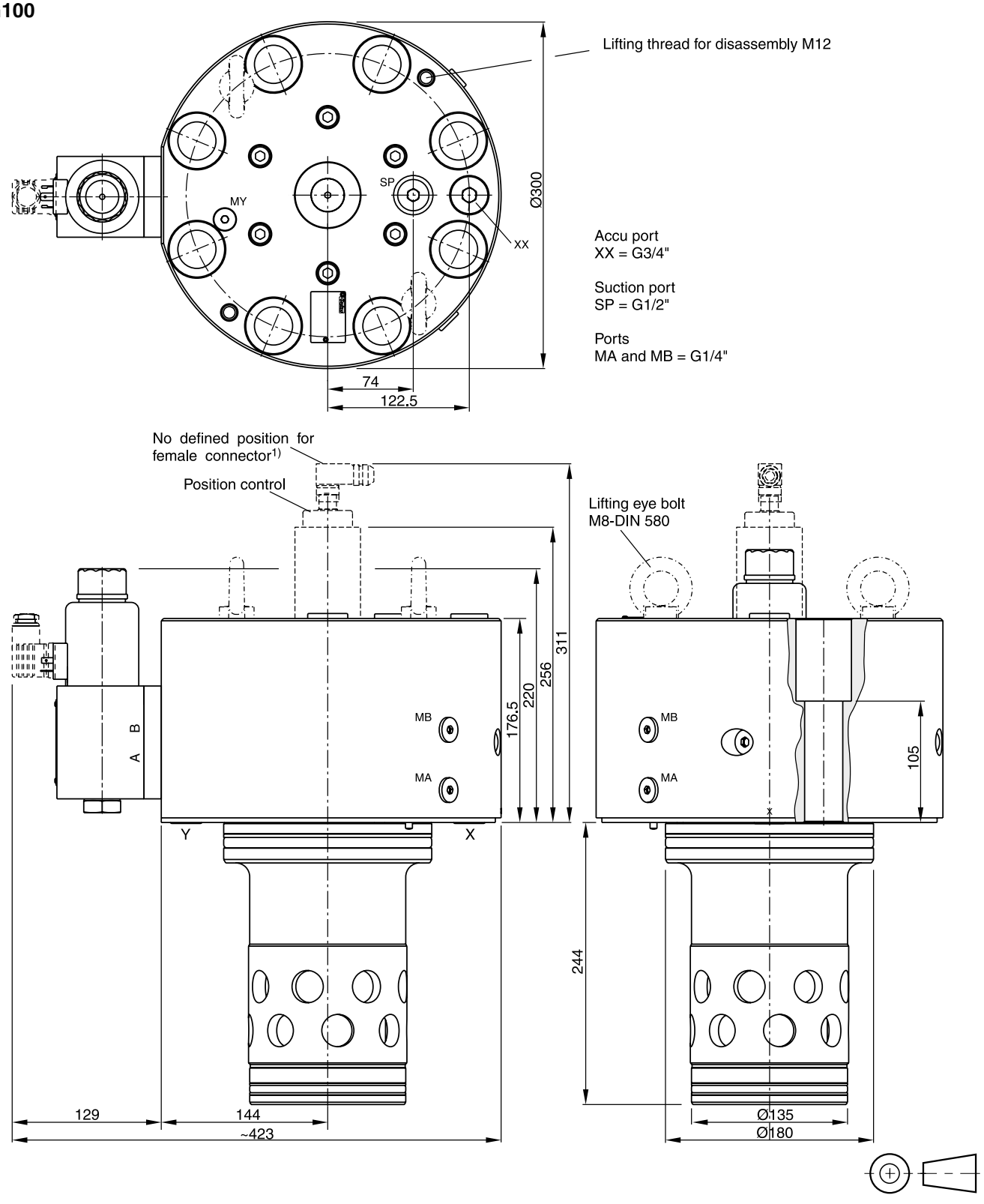

NG	Bolt kit		Kit NBR	Kit FPM
100	BK531 8x M30x150 ISO 4762-12.9	1775 Nm	SK-TDW100EN	SK-TDW100EV

1) Please order female connector M12x1 separately (see accessories directional control valves, female connector M12x1 (order no.: 5004109).

Code: ISO 7368-B*-*-2-A/B NG25 to NG63

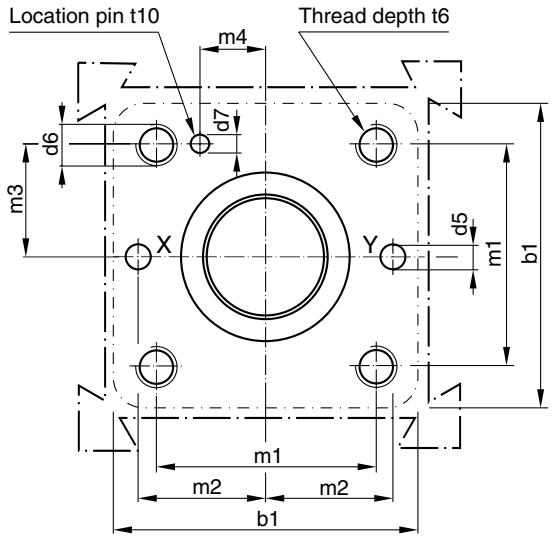

Code: ISO 7368-B*-*-2-A NG80 to NG100

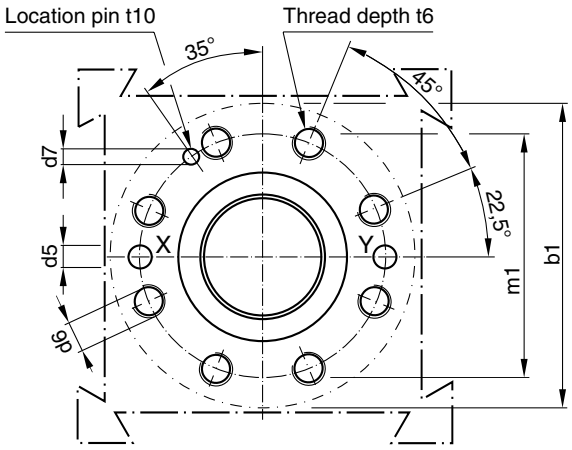

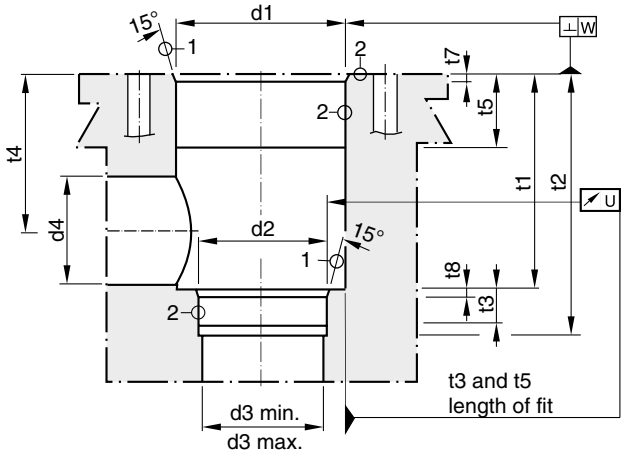

Required surface finish:

$(1) = \sqrt{R_{max}16}, (2) = \sqrt{R_{max}8}$

Deviating from ISO 7368 it is advisable to increase the diameters d3, d4 and d5.

Size	b1	d1 H7	d2 H7	d3	d3 max	d4 max[1)]	d5 max	d6	d7 H13	m1±0.2	m2±0.2	m3±0.2
25	85	45	34	25	27	32	6	M 12	4	58	33	29
32	102	60	45	32	44	50	8	M 16	6	70	41	35
40	125	75	55	40	54	63	10	M 20	6	85	50	42.5
50	140	90	68	50	67	80	10	M 20	8	100	58	50
63	180	120	90	63	89	100	12	M 30	8	125	75	62.5
80	250	145	110	80	109	110	16	M 24	10	200	—	—
100	300	180	135	100	134	150	20	M 30	10	245	—	—

Size	m4±0.2	t1+0.5	t2+1	t3	t4	t4 max[1)]	t5	t6	t7	t8	t10	U	W
25	16	58	72	12	44	40.5	30	35	2,5	2,5	10	0.03	0.05
32	17	70	85	13	52	44	15	35	2.5	2.5	10	0.03	0.1
40	23	87	105	15	64	54	15	45	3	3	10	0.05	0.1
50	30	100	122	17	72	59	17	45	4	3	10	0.05	0.1
63	38	130	155	20	95	78	19	65	4	4	10	0.05	0.2
80	—	175	205	25	130	115	32	50	5	5	10	0.05	0.2
100	—	210	245	29	155	133	32	53	5	5	10	0.05	0.2

[1)] Only in combination with d4max and t4max.

The 2-way proportional throttle valves series TDA are used to control large oil flows.

Features

- Cavity and mounting pattern according to ISO 7368
- Fail-safe function at power failure
- Leak-free from port B to A
- Pressure differential up to 350 bar possible
- 8 sizes NG16 up to NG100

Function

The 2-way proportional throttle valves have a 3-stage design consisting of the first solenoid operated pilot stage with a spool in sleeve design, the second pilot stage with the control spring and the sequence spool and as main stage the poppet in the sleeve. The proportional solenoid operates the pilot spool against the feedback of the control spring and controls the position of the sequence spool. The main poppet follows the position of the sequence spool and provides an open area for flow from B to A (optional A to B) in proportion to the solenoid current. The poppet is positioned independently of the differential pressure, which can become as high as the maximum working pressure.

In combination with the digital power amplifier PC-D00A-400 the valve parameters can be saved, changed and duplicated.



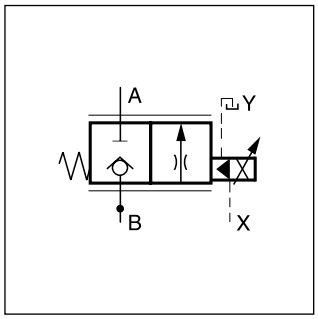

TDA025

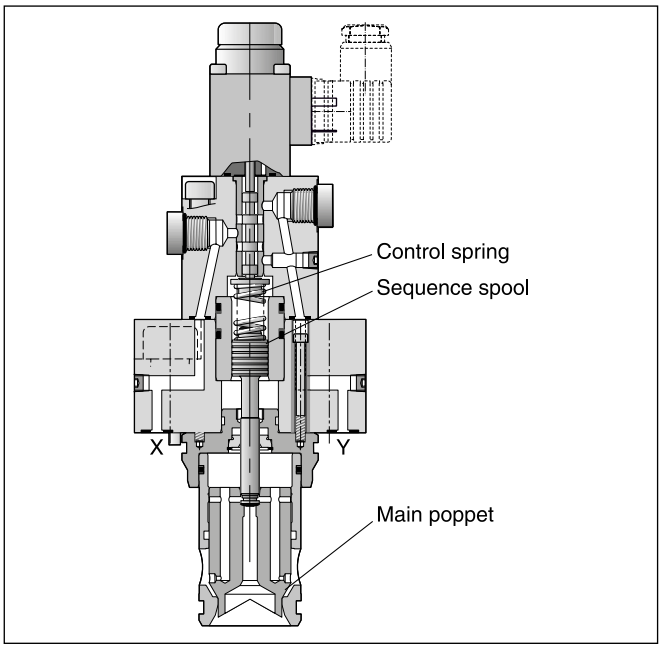

Ordering code

TDA		E	W	0			2				W	
2-way proportional throttle valve	Nominal size	Slip-in valve DIN ISO 7368	Design	Poppet shape	Nominal flow	Flow direction	Piloting	Seal	Solenoid voltage	Plug socket without plug	Design series (not required for ordering)	

Code	Nominal size
016	NG16
025	**NG25**
032	**NG32**
040	**NG40**
050	**NG50**
063	NG63
080	NG80
100	NG100

Code	Nominal flow
9	**Nominal flow**
6 [1)]	**Reduced flow**

[1)] Only for NG16 and NG25.

Code	Solenoid voltage
X	**16 VDC**
L	6 VDC

Code	Seal
N	**NBR**
V	**FPM**

Code	Flow direction
A	A to B
B	**B to A**

Bold letters =
Short-term availability

General								
Design	2-way proportional throttle valves, slip-in cartridge according to ISO 7368							
Nominal size	**NG16**	**NG25**	**NG32**	**NG40**	**NG50**	**NG63**	**NG80**	**NG100**
Mounting position	unrestricted							
Ambient temperature [°C]	-20...+60							
$MTTF_D$ value [years]	75							
Weight [kg]	3.1	4.3	5.8	9.2	15	33	63	87
Extracting tool	see accessories							
Hydraulics								
Max. operating pressure [bar]	Ports A, B and X up to 350, port Y: max. 10							
Fluid	Hydraulic oil according to DIN 51524							
Fluid temperature [°C]	-20...+70 (NBR: -25...+70)							
Viscosity permitted [cSt] / [mm²/s] recommended [cSt] / [mm²/s]	20...400 30...80							
Filtration	ISO 4406 (1999); 18/16/13							
Nominal flow at Δp = 10 bar [l/min]	220	500	950	1400	2300	4000	6000	9500
Flow direction	see ordering code							
Pilot pressure, min. [bar]	> 25 % of system pressure							
Min. operating pressure [bar]	Port A → B approx. 10; Port B → A approx. 15							
Pilot oil supply drain	Depending on flow direction A or B using X or external X External using port Y max. 10 bar							
Pilot oil at p = 100 bar [l/min]	Port X → Y <1.5							
Opening point	At 30 % of nominal current							
Manufacturing tolerance [%]	±5 of Qnom							
Static/dynamic								
Response time at px=50 bar [ms]	20	25	30	35	45	55	65	80
Hysteresis [%]	< 3							
Repeatabiltity [%]	< 1							
Electrical (proportional solenoid)								
Duty ratio	100 % ED							
Protection class	IP65 according to EN 60529 (with correctly mounted plug-in connector)							
Solenoid Code	L				X			
at size	16-50		63-100		16-50		63-100	
Solenoid voltage [V]	6				16			
Nominal current (100 % ED) [A]	2.6				1.05			
Nominal resistance [Ohm]	2.2		2.5		11.3		14	
Power amplifier, recommended	PCD 00A-400							
Solenoid connection	Connector as per EN 175301-803							

The pilot pressure in X-line must be at least 25 % (NG16-40) or 45 % (NG50-100) of the pressure in the draining-off line of the cartridge to make sure that the main poppet closes safely without malfunction.

Solenoid current / flow curves
NG16-25 (Δp = 10 bar)

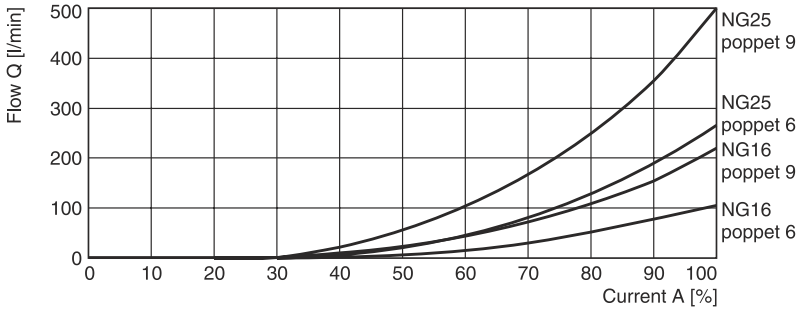

NG32-50 (Δp = 10 bar)

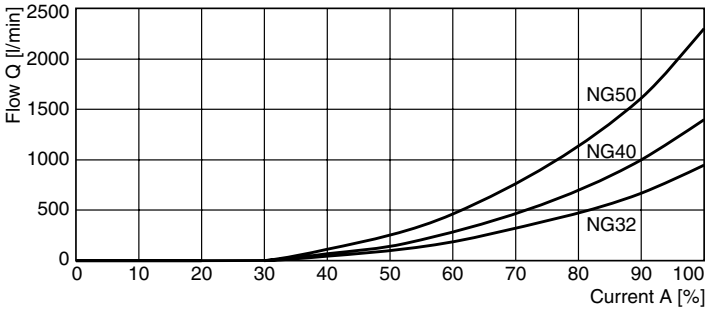

NG63-100 (Δp = 10 bar)

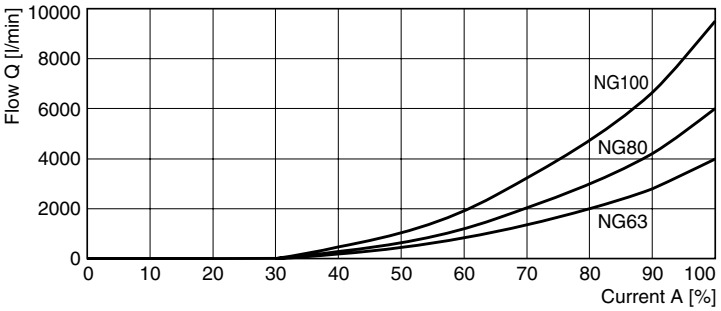

$$\Delta p_{actual} = \left(\frac{Q_{actual}}{Q_{nominal}}\right)^2 \bullet \Delta p_{nominal}$$

Poppet stroke / time curve

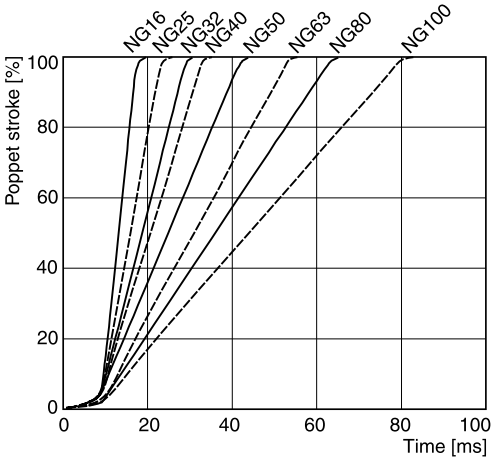

All characteristic curves measured with HLP46 at 50 °C.

Valves

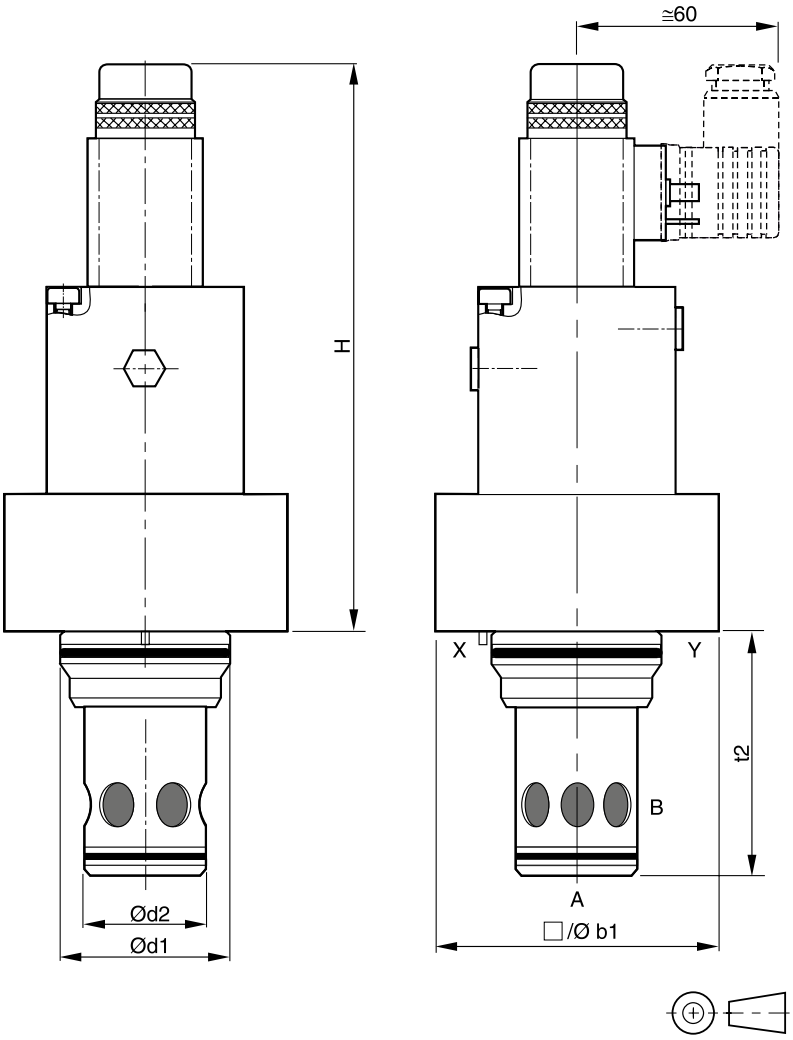

Valve covers

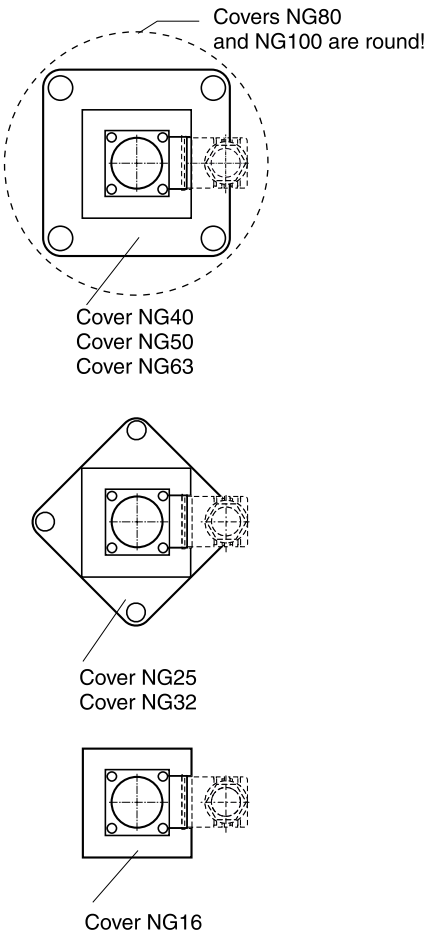

Size	16	25	32	40	50	63	80	100
H	168	177	182	192	202	304	324	339
b1	65	85	102	125	140	180	Ø250	Ø300
$d1^{H7}$	32	45	60	75	90	120	145	180
$d2^{H7}$	25	34	45	55	68	90	110	135
$t2^{+0.1}$	56	72	85	105	122	155	205	245

NG	Kit	ISO 4762-12.9		Kit NBR	Kit FPM
16	BK510	4x M8x100	31.8 Nm	SK-TDA016EN	SK-TDA016EV
25	BK391	4x M12x50	108 Nm	SK-TDA025EN	SK-TDA025EV
32	BK415	4x M16x55	264 Nm	SK-TDA032EN	SK-TDA032EV
40	BK416	4x M20x70	517 Nm	SK-TDA040EN	SK-TDA040EV
50	BK417	4x M20x75	517 Nm	SK-TDA050EN	SK-TDA050EV
63	BK418	4x M30x100	1775 Nm	SK-TDA063EN	SK-TDA063EV
80	BK419	8x M24x120	890 Nm	SK-TDA080EN	SK-TDA080EV
100	BK420	8x M30x140	1775 Nm	SK-TDA100EN	SK-TDA100EV

Accumulator discharge valves series TEA are preferably used in hydraulic systems where high flow rates are discharged from hydraulic accumulators over a short operating period (in the range of milliseconds). Typical applications are injection molding and die casting machines as well as hydraulic presses.

Basically the function of an accumulator discharge valve corresponds to the function of a TDA throttle valve. In addition a directional valve is integrated in the pilot circuit to meet the relevant safety regulations.

The directional valve provides the safety function. When the solenoid is deenergized and the spring is in end position, pilot pressure from X presses the control piston into lower end position and the main poppet is closed. As a result the flow from B to A or from the reservoir system to the machine is blocked.

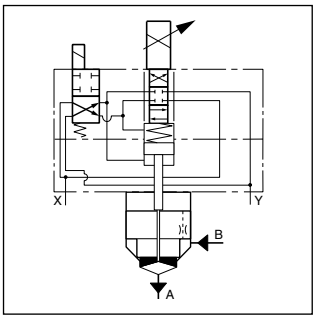

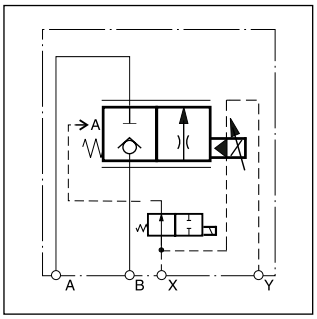

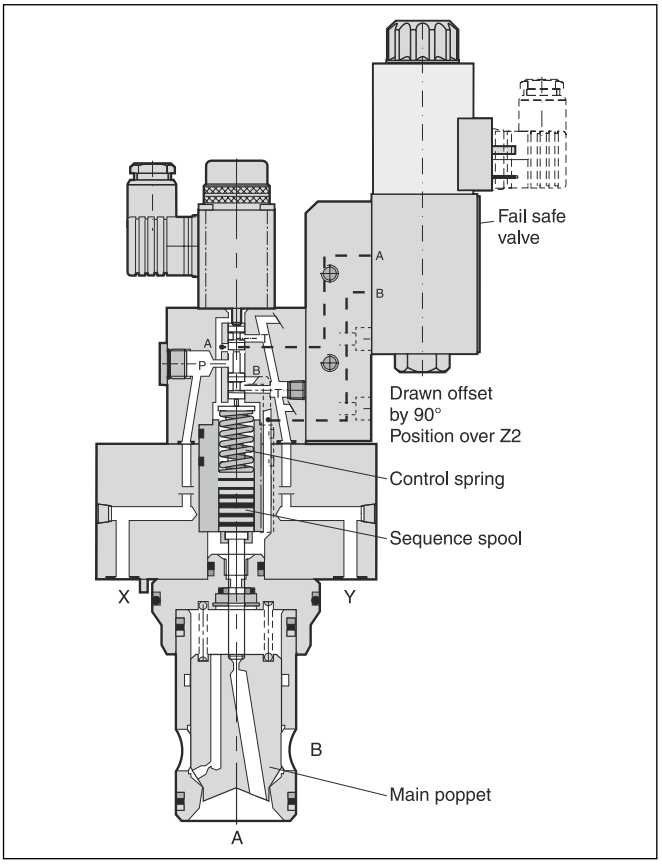

Characteristic curve

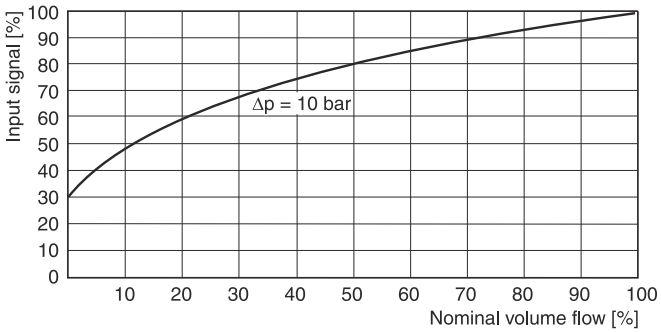

Characteristic curve measured with HLP46 at 50 °C.

Example accumulator system in a die casting machine

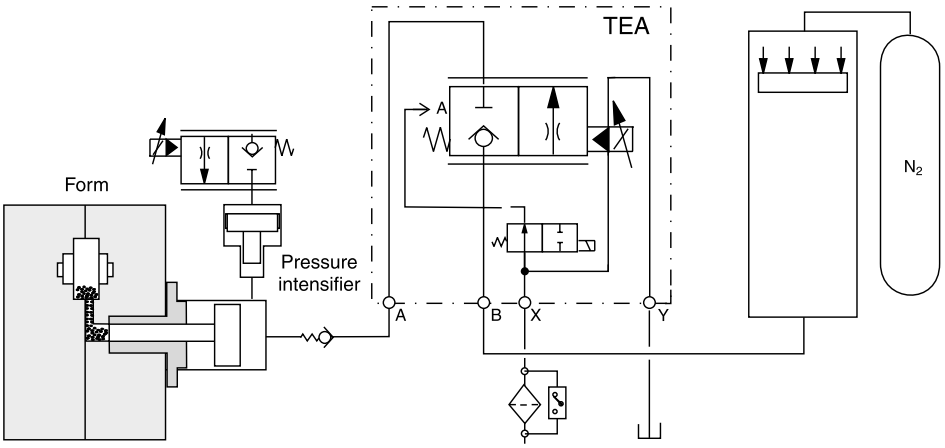

Ordering code

TEA		E	W	0	9		2			W		
2-way Prop. throttle valve with shut-off function	Nominal size	Cartridge valve ISO 7368	Design	Spool form	Flow code	Flow direction	Pilot oil guide	Seals	Prop. solenoid voltage	Plug socket without plug	Solenoid voltage	Design series (not required for ordering)

Code	Nominal size
025	NG25
032	NG32
040	**NG40**
050	**NG50**
063	**NG63**
080	NG80
100	NG100

Code	Flow direction
A	A to B
B	**B to A**

Bold letters =
Short-term availability

Code	Solenoid
J	**24 V= / 1.25 A**
U [1]	98 V= / 0.31 A
G [1]	205 V= / 0.15 A

Code	Proportional solenoid voltage
L	**6 VDC**
X	**16 VDC**

Code	Seal
N	**NBR**
V	FPM

[1] To be used in combination with rectifier plugs at 120 VAC / 230 VAC power supply.

Technical data

General								
Design		2-way proportional throttle valve, slip-in cartridge according to ISO 7368						
Nominal size		**NG25**	**NG32**	**NG40**	**NG50**	**NG63**	**NG80**	**NG100**
Mounting position		unrestricted						
Ambient temperature	[°C]	-20...+60						
$MTTF_D$ value	[years]	75						
Weight	[kg]	7.5	9	13	22	38	62	85
Extracting tools		See accessories						
Hydraulics								
Max. operating pressure	[bar]	Ports A, B and X up to 350, port Y max. 10						
Fluid		Hydraulic oil according to DIN 51524						
Fluid temperature	[°C]	-20...+70 (NBR: -25...+70)						
Viscosity, permitted	[cSt]/[mm²/s]	20...400						
recommended	[cSt]/[mm²/s]	30...80						
Filtration		ISO 4406 (1999); 18/16/13						
Nominal flow Δp = 10 bar	[l/min]	500	950	1400	2300	4000	6000	9500
Pilot pressure, min.	[bar]	> 25 % of system pressure						
Pilot oil	supply	Depending on flow direction A or B using X or external X						
Pilot oil at p = 100 bar	[l/min]	Port X → Y <1.5						
Opening point		At 30 % of nominal current						
Manufacturing tolerance	[%]	±5 of Qnom						
Static/dynamic								
Response time at px = 50 bar	[ms]	25	30	35	45	55	65	80
Hysteresis	[%]	< 3						
Repeatability	[%]	< 1						
Electrical (proportional solenoid)								
Duty ratio		100 % ED						
Protection class		IP65 according to EN 60529 (with correctly mounted plug-in connector)						
Solenoid	Code	L			X			
at size		16-50	63-100		16-50	63-100		
Solenoid voltage	[V]	6			16			
Nominal current (100 % ED)	[A]	2.6			1.05			
Nominal resistance	[Ohm]	2.2	2.5		11.3	14		
Power amplifier, recommended		PCD 00A-400, Connector as per EN 175301-803						
Pilot valve		4/2 flow control valve type D1VW (NG25-NG50), type D3DW (NG63-NG100)						

8

TEA UK.INDD 10.04.19

TEA NG25...50

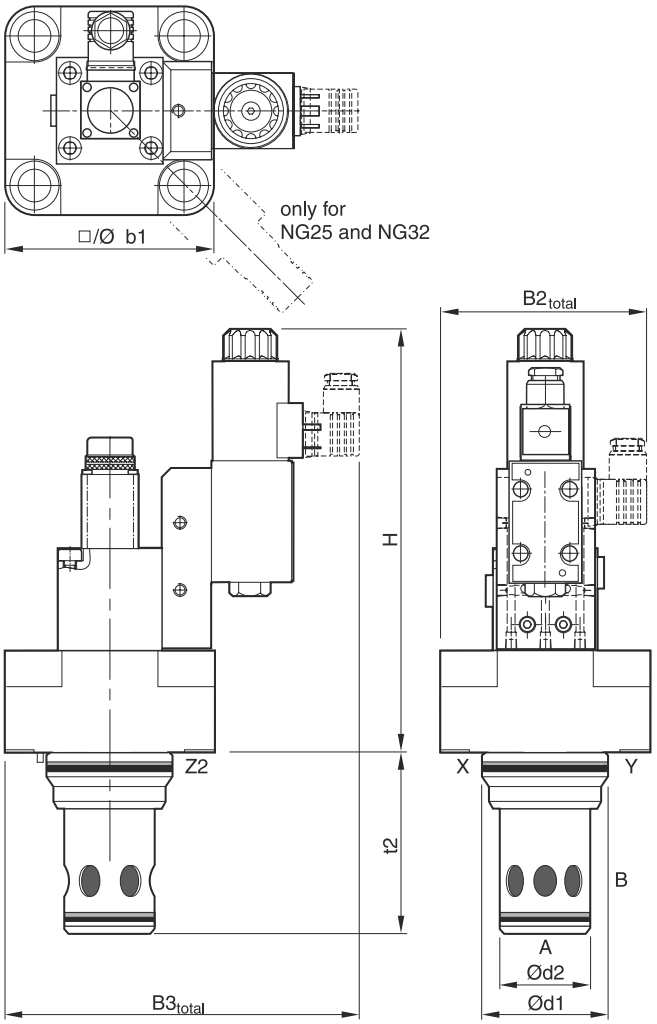

TEA NG63...100

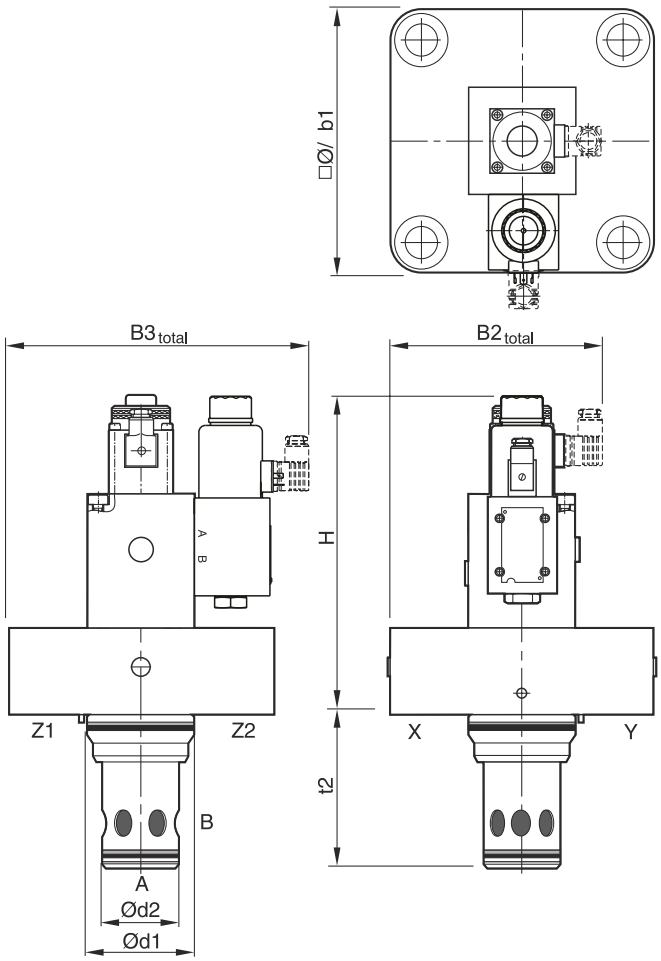

Size	25	32	40	50	63	80	100
H	239	250	260	270	312	337	352
b1	85	102	125	140	180	Ø 250	Ø 300
$d1^{H7}$	45	60	75	90	120	145	180
$d2^{H7}$	34	45	55	68	90	110	135
$t2^{+0.1}$	72	85	105	122	155	205	245
$B2_{total}$	98	106	118	125	158	193	218
$B3_{total}$	208	205	216	224	255	290	315

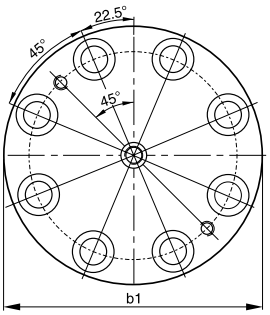

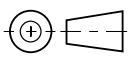

NG	Kit	ISO 4762-12.9		Kit NBR	Kit FPM
25	BK391	4x M12x50	108 Nm	SK-TEAN10E25	SK-TEAN10E25V
32	BK415	4x M16x55	264 Nm	SK-TEAN10E32	SK-TEAN10E32V
40	BK416	4x M20x70	517 Nm	SK-TEAN10E40	SK-TEAN10E40V
50	BK417	4x M20x75	517 Nm	SK-TEAN10E50	SK-TEAN10E50V
63	BK418	4x M30x100	1775 Nm	SK-TEAN10E63	SK-TEAN10E63V
80	BK419	8x M24x120	890 Nm	SK-TEAN10E80	SK-TEAN10E80V
100	BK420	8x M30x140	1775 Nm	SK-TEAN10E100	SK-TEAN10E100V

The 2-way high performance proportional throttle valves series TDC are used in applications where high flow has to be precisely controlled at high dynamics. Typical applications are die casting, injection moulding and hydraulic presses.

Function

The 2-way high performance proportional throttle valves TDC have a 2-stage design consisting of a proportional pilot valve and a main stage with poppet and LVDT.

With the pilot valve the TDC achieves fast response times: from 20 ms (NG25) up to 31 ms (NG50) with an accuracy of <0.7 % of the nominal flow. The pilot valve actively controls the poppet - independent of the pressure conditions in the main ports.
It is basically required that the pilot pressure is at the level of the system pressure. At low system pressure the pilot pressure should be min. 140 bar, when high valve dynamics are desired.



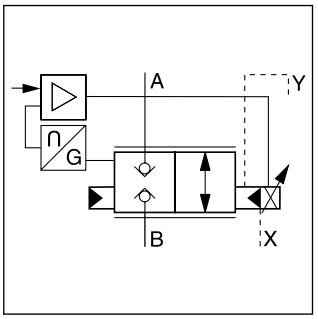

TDC040

Features

- Active pilot operated 2-way high performance proportional throttle valve
- Cavity and mounting pattern according to ISO 7368
- Fast step response
- Flow direction B to A and A to B
- Completely mounted and adapted unit with integrated electronics
- In order to ensure the closed position, pilot pressure is required.
- 4 sizes NG25 up to NG50

TDC040

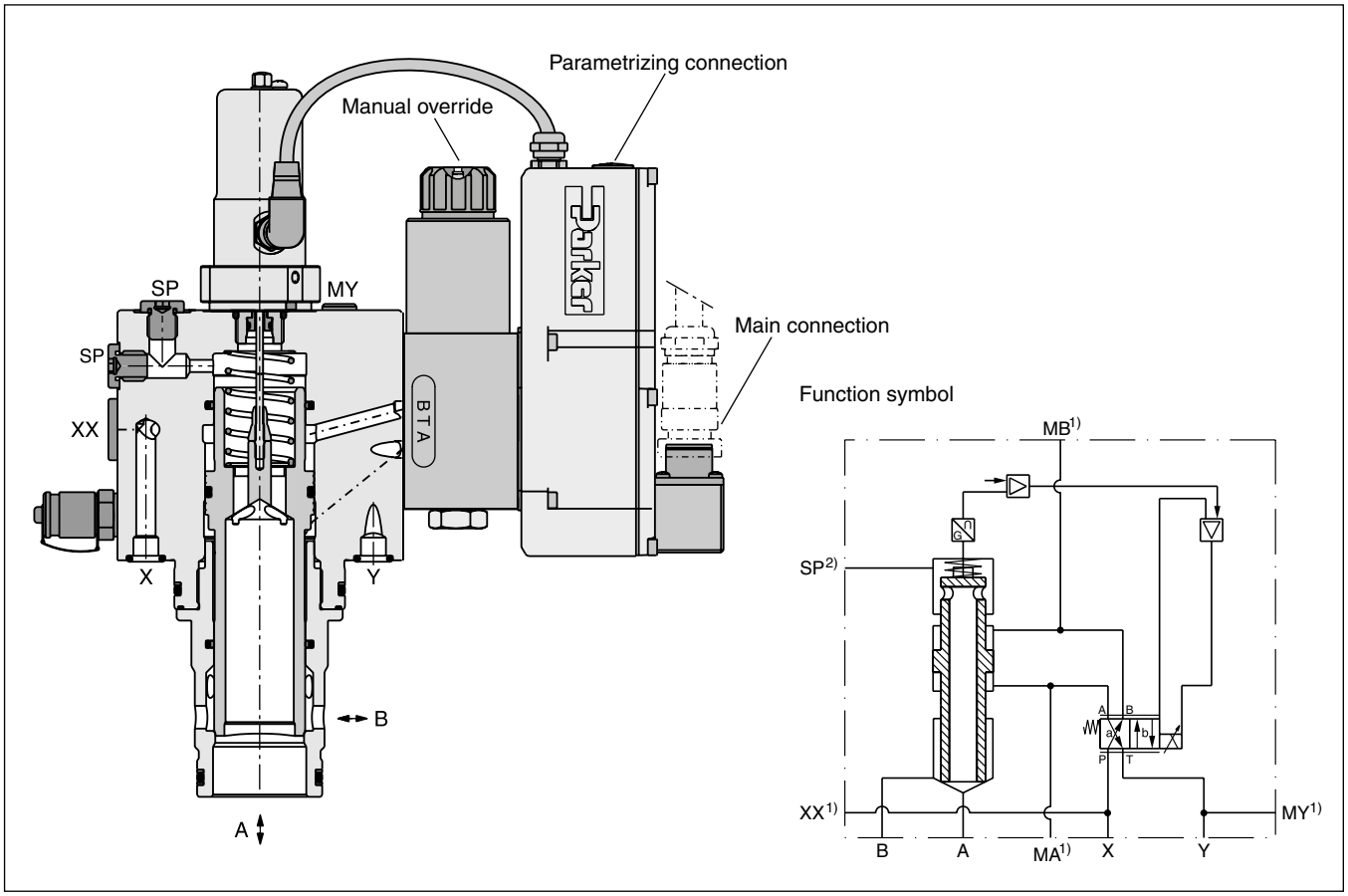

1) NG25 and NG32 without accu port XX and without ports MA, MB and MY.
2) NG25 without suction port SP.

TDC UK25.04.19

Ordering code

TDC		E	S		9	C	2				0	
2-way high performance proportional throttle valves	**Nominal size**	**Slip-in cartridge**	**Performance standard response for controlled applications**	**Flow characteristics**	**Nominal flow**	**Flow direction B → A A → B**	**Pilot oil** (supply external, drain external)	**Seal**	**Command signal**	**Standard electronics**	**Design series** (not required for ordering)	

Code	Nominal size
025	NG25
032	NG32
040	NG40
050	NG50

Code	Flow characteristics
7	progressive
9	linear

Code	Command signal
B	0...+10 V
E	0...+20 mA

Code	Seal
N [1]	NBR
V	FPM

[1] HFC fluids suitable

Please order connector separately.

Characteristic flow/signal lines
Δp = 5 bar

Linear (code 9)

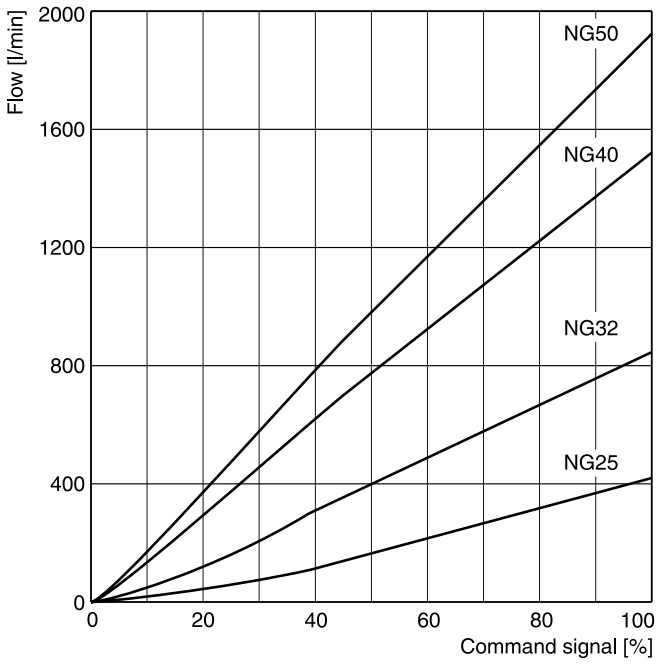

Progressive (code 7)

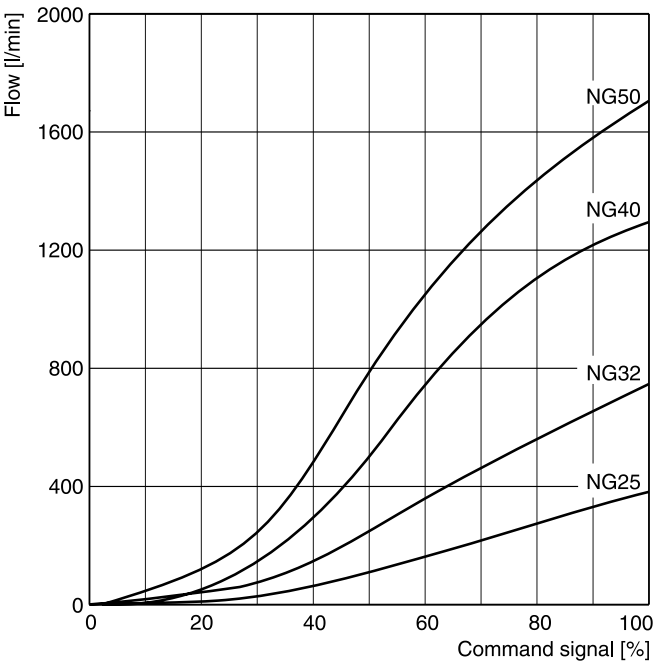

Opening point factory set to 3 %

Flow at different Δp $Q_{actual} = Q_{nominal} \bullet \sqrt{\Delta p_{actual} / \Delta p_{nominal}}$

Characteristic curve measured with HLP46 at 50 °C.

TDC UK25.04.19

General						
Design			Proportional throttle valve with LVDT and integrated electronics, slip-in cartridge according to ISO 7368			
Nominal size		DIN	**NG25**	**NG32**	**NG40**	**NG50**
Mounting position			unrestricted			
Ambient temperature		[°C]	-20...+60			
Weight		[kg]	11	13	15	26
Vibration resistance		[g]	10 sinus 5...2000 Hz acc. IEC 68-2-6 10 (RMS) random noise 20...2000 Hz acc. IEC 68-2-36 15 shock acc. IEC 68-2-27			
Hydraulic						
Max. operating pressure		[bar]	Ports A, B, X and SP up to 350, XX observe accumulator pressure rating; port Y: max. 210			
Fluid			Hydraulic oil according to DIN 51524			
Fluid temperature		[°C]	-20...+60 (NBR: -25...+60)			
Viscosity	recommended	[cSt] / [mm²/s]	30 ... 80			
	permitted	[cSt] / [mm²/s]	20 ... 400			
Filtration			ISO 4406; 18/16/13			
Nominal flow at Δp = 5 bar (linear)		[l/min]	420	850	1500	1900
Recommended max. flow (linear)		[l/min]	800	2000	3000	4500
Nominal flow at Δp = 5 bar (progressive)		[l/min]	380	750	1300	1700
Recommended max. flow (progressive)		[l/min]	700	1750	2600	4000
Flow direction			B to A / A to B			
Pilot pressure		[bar]	must be as high as system pressure			
Pilot oil	supply		external via X			
	drain		external via Y			
Leakage in pilot valve at 100 bar		[ml/min]	<400			
Pilot valve size			**NG06**			
Max. pilot flow at 140 bar pilot pr.		[l/min]	23	30	40	40
Static/dynamic						
(for optimal dynamics see installation recommendation)						
Step response at pilot press. >140 bar		[ms]	20	22	27	31
Hysteresis		[%]	< 0.1			
Sensitivity		[%]	< 0.5			

Electrical			
Duty ratio		[%]	100
Protection class			IP65 in accordance with EN 60529 (with correctly mounted plug-in connector)
Supply voltage / ripple		[V]	DC 18 ... 30, electric shut-off at < 17, ripple < 5 % eff., surge free
Current consumption max.		[A]	2.0
Pre-fusing		[A]	2.5 A medium lag
Input signal			
Code B	Voltage	[V]	0...+10, ripple < 0,01 % eff., surge free
	Impedance	[kOhm]	100
Code E	Current	[mA]	0...+20, ripple <0,01 % eff., surge free
	Impedance	[Ohm]	< 250
Differential input max.		[V]	30 for terminal D and E against PE (terminal G) 11 for terminal D and E against 0V (terminal B)
Adjustment ranges	Min.	[%]	0...50
	Max.	[%]	50...100
	Ramp	[s]	0...32.5
Enable signal		[V]	5...30
Diagnostic signal		[V]	0...+10 / +12.5 error detection, rated max. 5 mA
EMC			EN 61000-6-2, EN 61000-6-4
Electrical connection			6 + PE acc. EN 175201-804
Wiring min.		[mm²]	7 x 1.0 (AWG16) overall braid shield
Wiring length max.		[m]	50

8

Block circuit diagram electronics

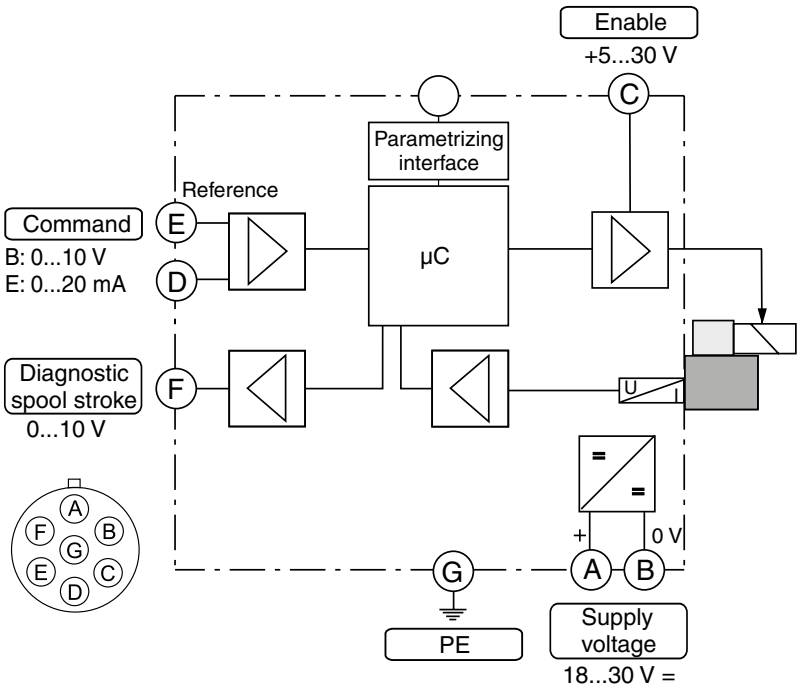

Connection diagrams electronics

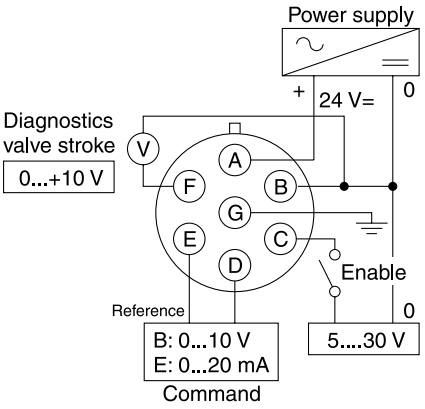

8

Female connector
(EMC conform)

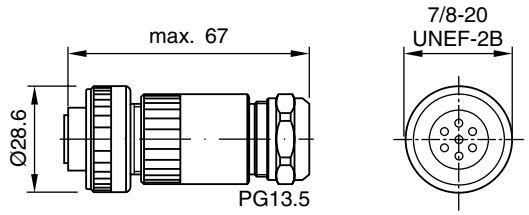

ID no. 5004072

Angle female connector
(EMC conform)

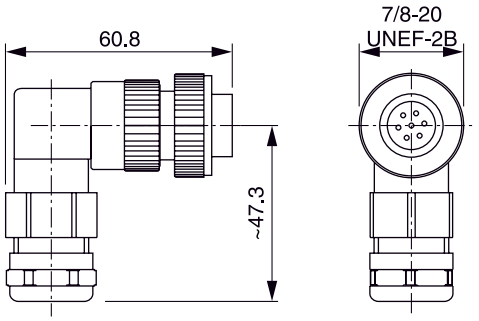

ID no. 5005160

Please order plugs separately.

ProPxD interface program

The ProPxD software allows quick and easy setting of the digital valve electronics. Individual parameters as well as complete settings can be viewed, changed and saved via the comfortable user interface. Parameter sets saved in the non-volatile memory can be loaded to other valves of the same type or printed out for documentation purposes.

The PC software can be downloaded free of charge at www.parker.com/isde – see page “Support" or directly at www.parker.com/propxd.

Features

- Comfortable editing of valve parameters
- Saving and loading of customized parameter sets
- Executable with all Windows® operating systems from Windows® XP upwards
- Simple communication between PC and valve electronics via serial interface RS232C

The valve electronics cannot be connected to a PC with a standard USB cable – this can result in damages of PC and/or valve electronics.

The parametrizing cable may be ordered under item no. 40982923.

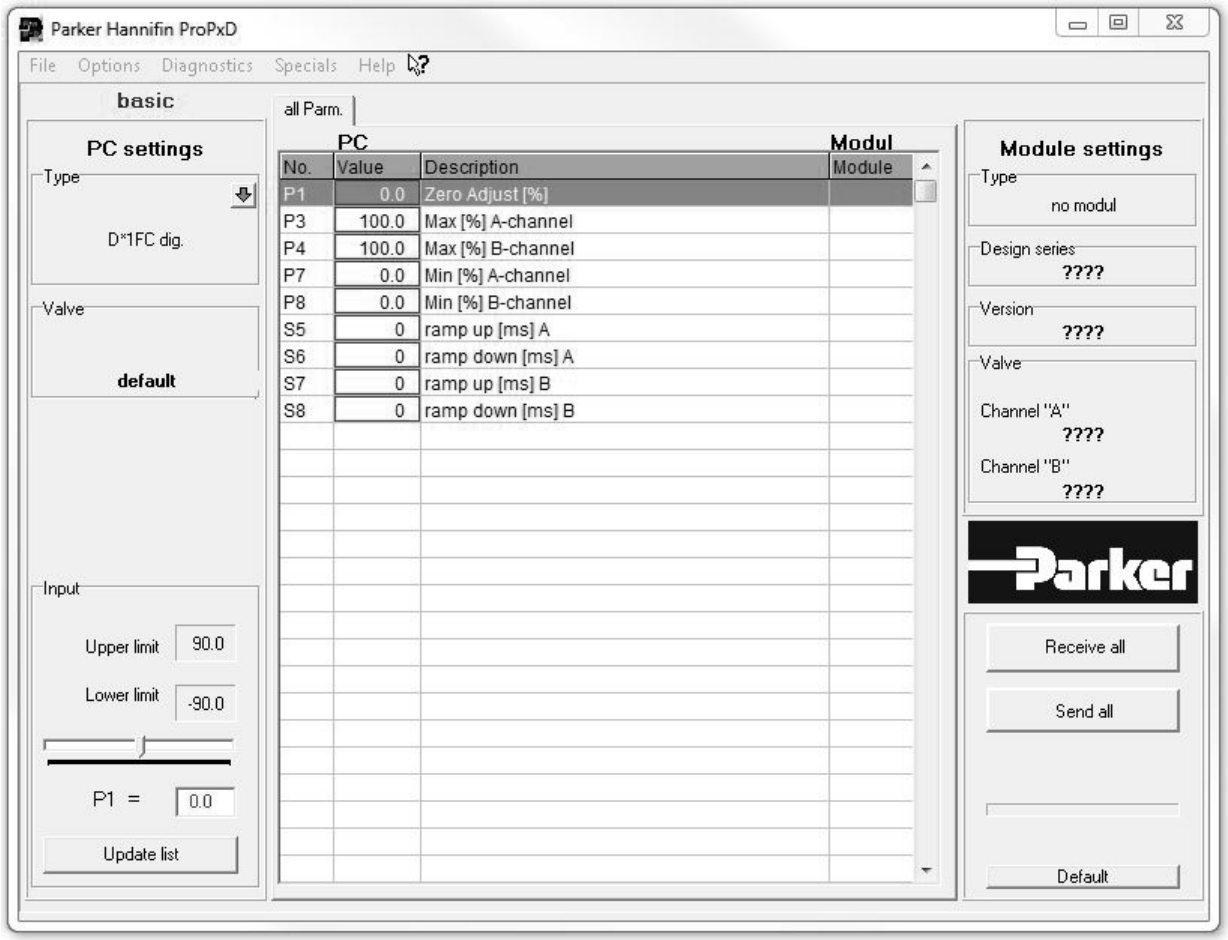

NG25

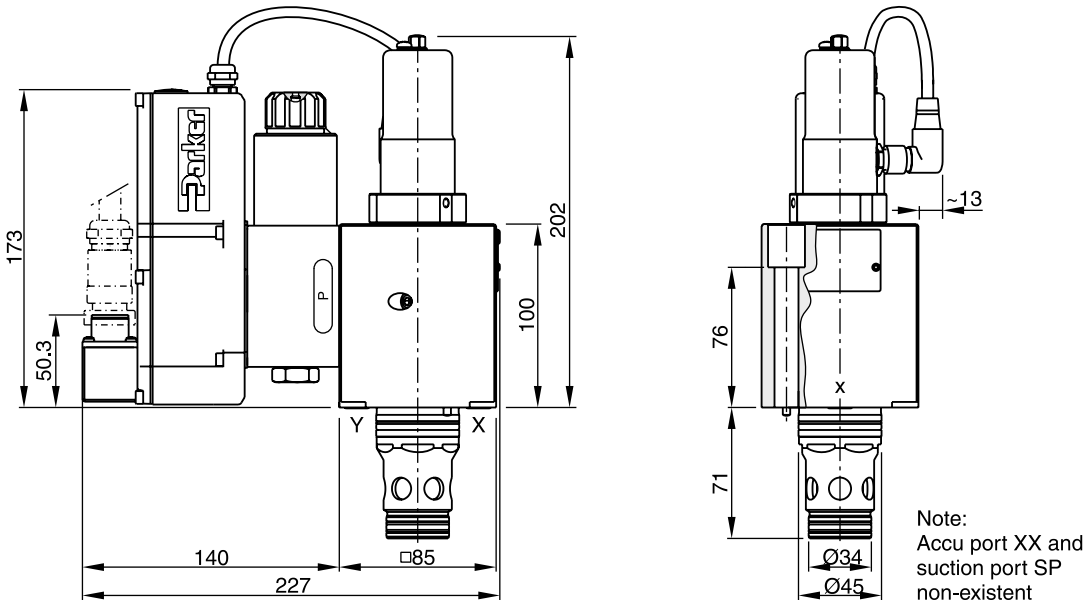

NG32

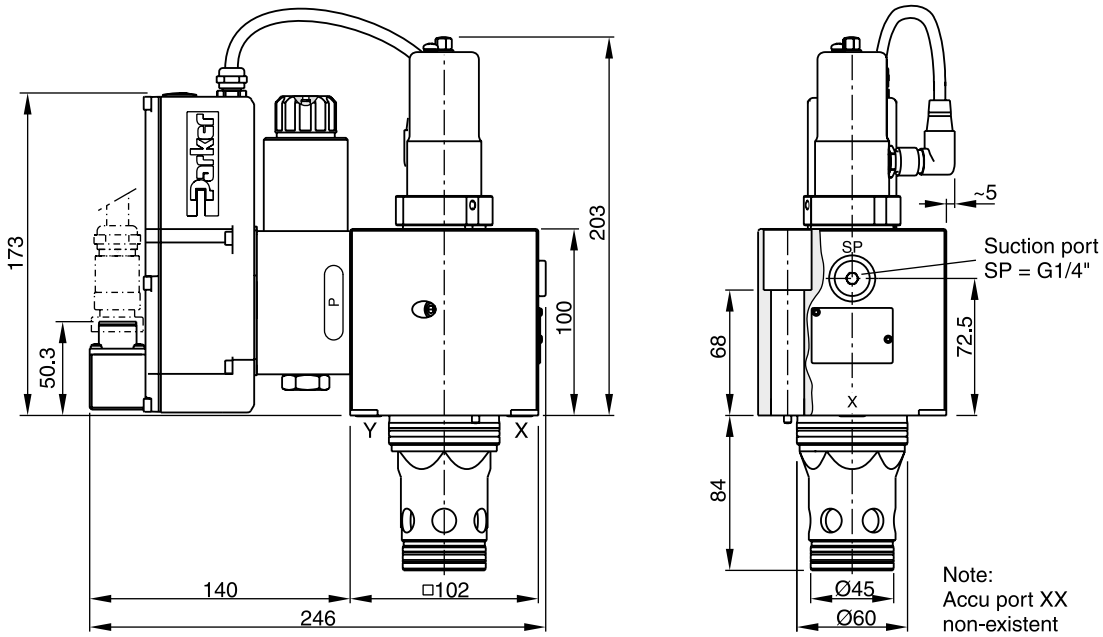

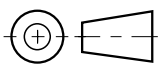

Suction port SP: Contact Parker for installation recommendation.

NG	Bolt kit -		Kit	
			NBR	FPM
25	BK504 4 x M12x100 ISO 4762-12.9	108 Nm	SK-TDP025EN30	SK-TDP025EV30
32	BK529 4 x M16x100 ISO 4762-12.9	264 Nm	SK-TDP032EN30	SK-TDP032EV30

TDC UK25.04.19

NG40 [1)]

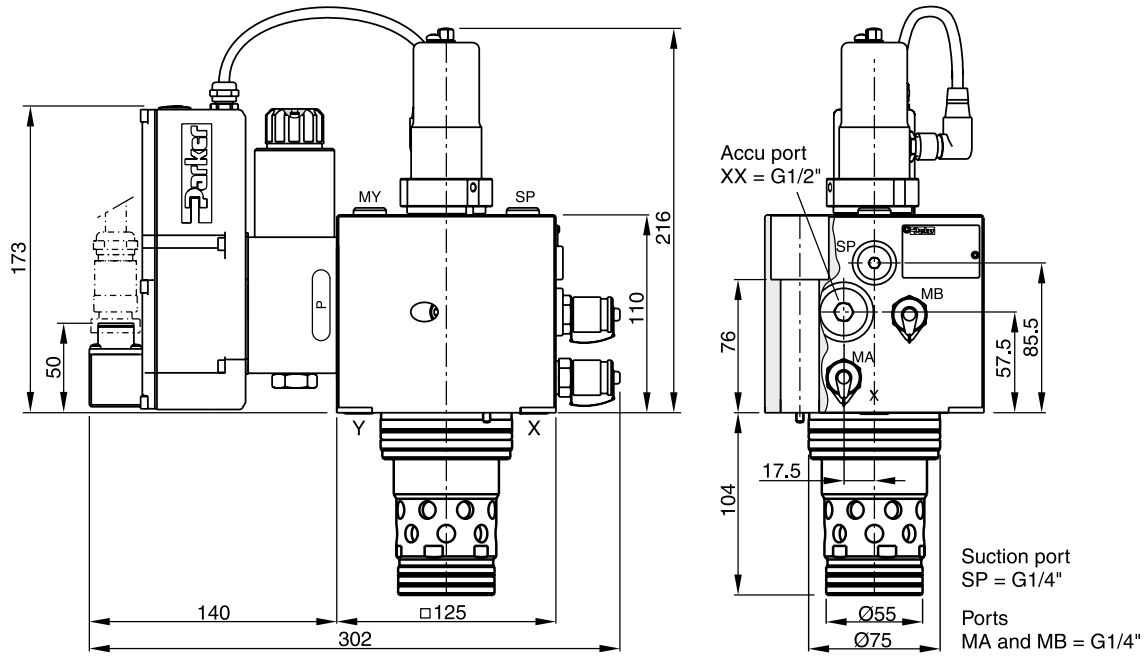

NG50 [2)]

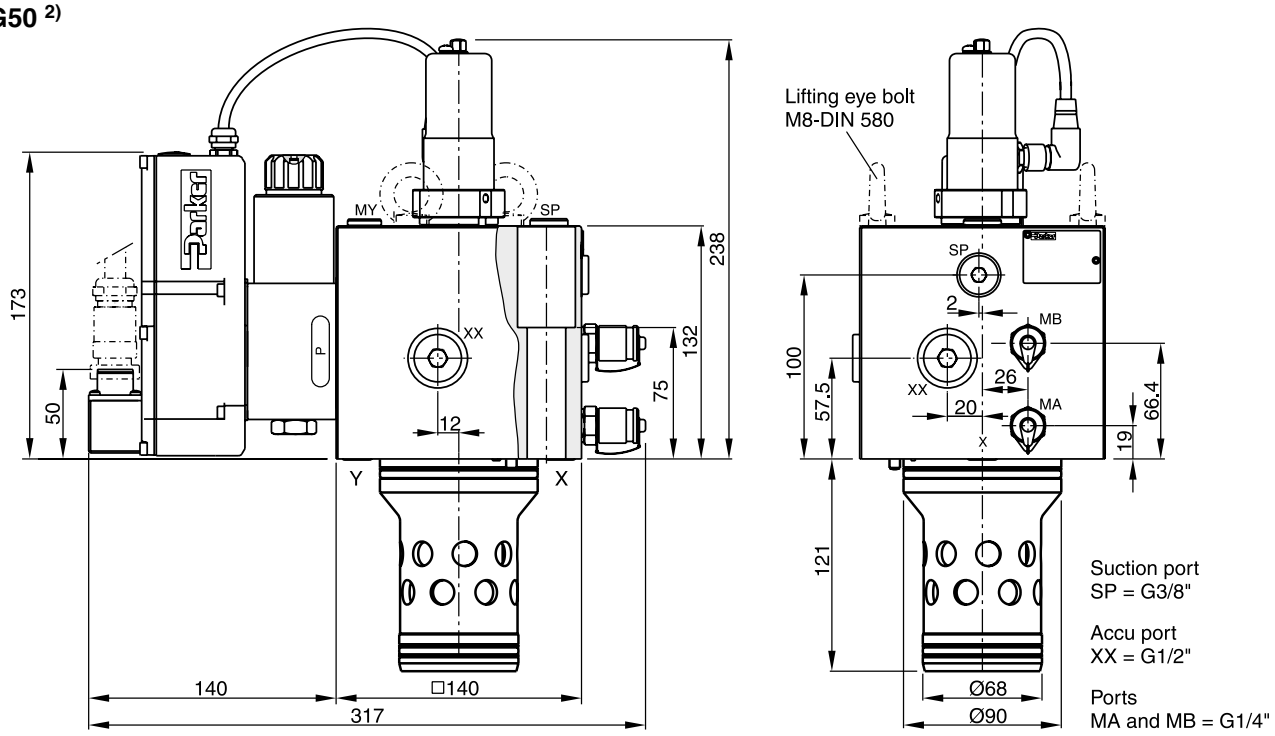

Lifting thread for disassembly M12

[1)] Recommended accumulator ELM 0.16-250/00/AF, please see catalogue HY10-4004/UK for details.
[2)] Recommended accumulator ELM 0.32-210/00/AF, please see catalogue HY10-4004/UK for details.

Suction port SP: Contact Parker for installation recommendation.

NG	Bolt kit -		Kit NBR	Kit FPM
40	BK481 4 x M20x110 ISO 4762-12.9	517 Nm	SK-TDP040EN30	SK-TDP040EV30
50	BK481 4 x M20x110 ISO 4762-12.9	517 Nm	SK-TDP050EN30	SK-TDP050EV30

TDC UK25.04.19

Code: ISO 7368-B*-*-2-A/B

NG25 to NG50

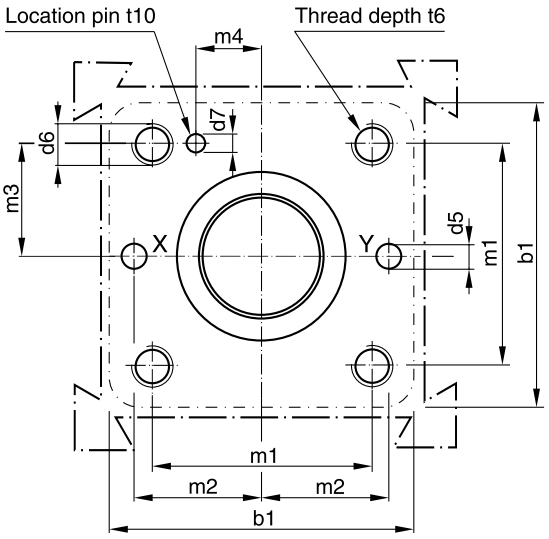

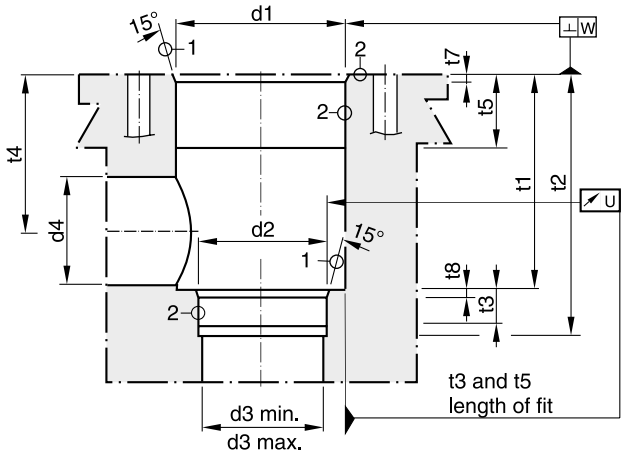

Required surface finish:

$(1) = \sqrt{R_{max}16}, (2) = \sqrt{R_{max}8}$

Deviating from ISO 7368 it is advisable to increase the diameters d3, d4 and d5.

Size	b1	d1 H7	d2 H7	d3 / d4	d3 max	d4 max[1)]	d5	d6	d7 H13	m1±0.2	m2±0.2	m3±0.2
25	85	45	34	25	27	32	6	M12	4	58	33	29
32	102	60	45	32	44	50	8	M 16	6	70	41	35
40	125	75	55	40	54	63	10	M 20	6	85	50	42.5
50	140	90	68	50	67	80	10	M 20	8	100	58	50

Size	m4±0.2	t1+0.5	t2+1	t3	t4	t4 max.[1)]	t5	t6	t7	t8	t10	U	W
25	16	58	72	12	44	40.5	30	35	25	25	10	0.03	0.05
32	17	70	85	13	52	44	15	35	2.5	2.5	10	0.03	0.1
40	23	87	105	15	64	54	15	45	3	3	10	0.05	0.1
50	30	100	122	17	72	59	17	45	4	3	10	0.05	0.1

[1)] d4 max. only in combination with t4 max.

The 2-way servo proportional valves with VCD® technology valves series TDP are used in applications where high flow has to be precisely controlled at maximum dynamics. Typical applications are die casting, injection moulding and hydraulic presses.

Function

The 2-way servo proportional valves TDP have a 2-stage design consisting of a DFplus pilot valve and a main stage with poppet and LVDT.

With the DFplus pilot valve the TDP achieves extremely fast response times: from 10.5 ms (NG25) up to 28 ms (NG100) with an accuracy of <0.1 % of the nominal flow. The pilot valve actively controls the poppet - independent of the pressure conditions in the main ports. It is basically required that the pilot pressure is at the level of the system pressure. At low system pressure the pilot pressure should be min. 140 bar, when high valve dynamics are desired. The integrated electronics in the pilot of the TDP has two control loops for the main poppet and the pilot spool.



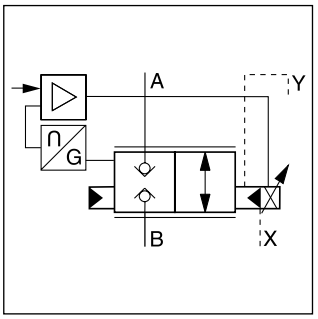

TDP040

Features

- Active pilot operated 2-way servo proportional valve
- Cavity and mounting pattern according to ISO 7368
- Fast step response
- Flow direction B to A and A to B
- Completely mounted and adapted unit with integrated electronics
- In order to ensure the closed position, pilot pressure is required
- 7 sizes, NG25 up to NG100

TDP040

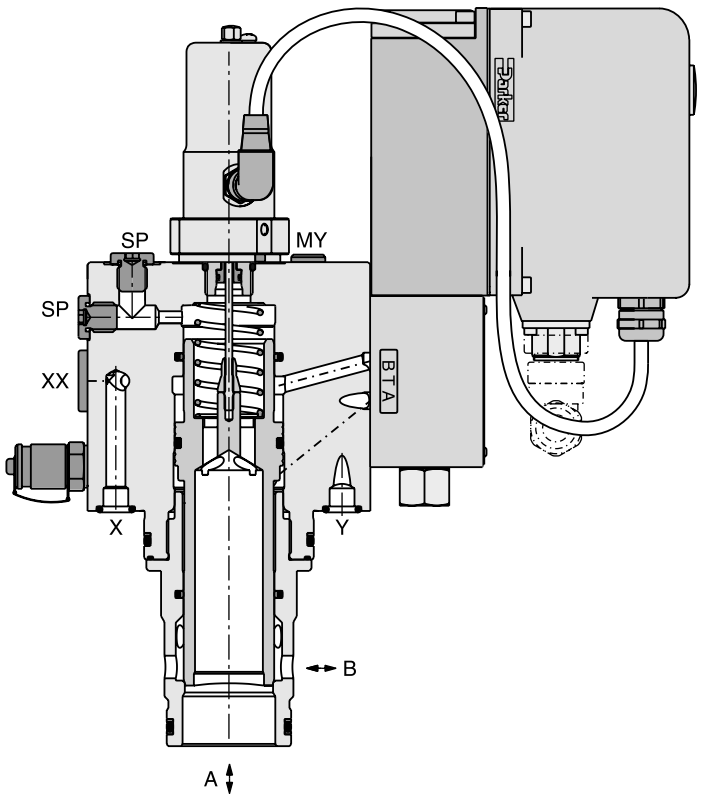

Function symbol

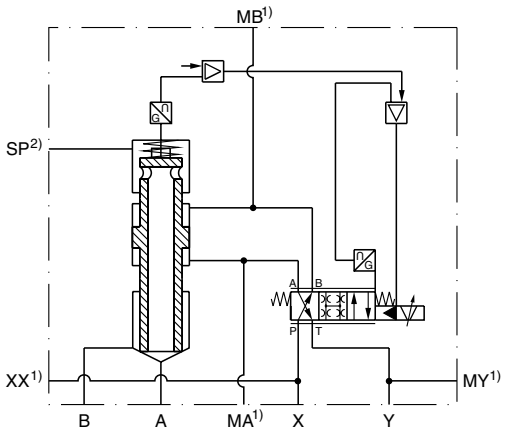

1) NG25 and NG32 without accu port XX and without port MA, MB and MY.
2) NG25 without suction port SP.

Ordering code

TDP		E	H		9	C	2				0	
2-way servo proportional valve with LVDT	**Nominal size**	**Slip-in cartridge**	**Closed loop, VCD® performance, integrated electronics**	**Flow characteristic**	**Nominal flow**	**Flow direction B → A A → B**	**Pilot oil** (supply external, drain external)	**Seal**	**Command signal**	**Standard electronics**	**Design series** (not required for ordering)	

Code	Nominal size
025	NG25
032	NG32
040	NG40
050	NG50
063	NG63
080	NG80
100	NG100

Code	Command signal
B	0...+10 V
E	0...+20 mA
S	4...+20 mA

Code	Seal
N [1]	NBR
V	FPM

Code	Flow characteristic
7	progressive
9	linear

[1] HFC fluids suitable

The DFplus pilot valve is also available with EtherCAT interface, see chapter 3, D*FP and D*1FP with EtherCAT.

Please order connector separately.
Angle female connector must be used for NG25 to NG50.

8

Characteristic flow/signal line, Δp = 5 bar

Linear (code 9)

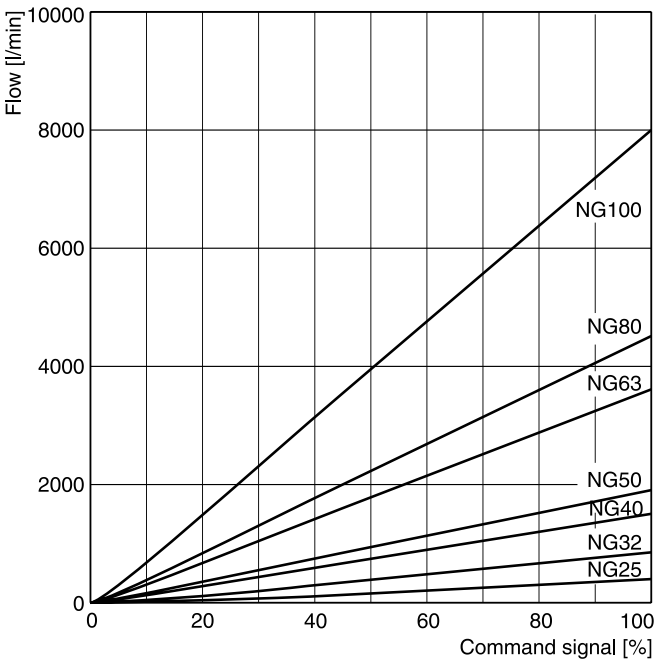

Progressive (code 7 for TDL replacement)

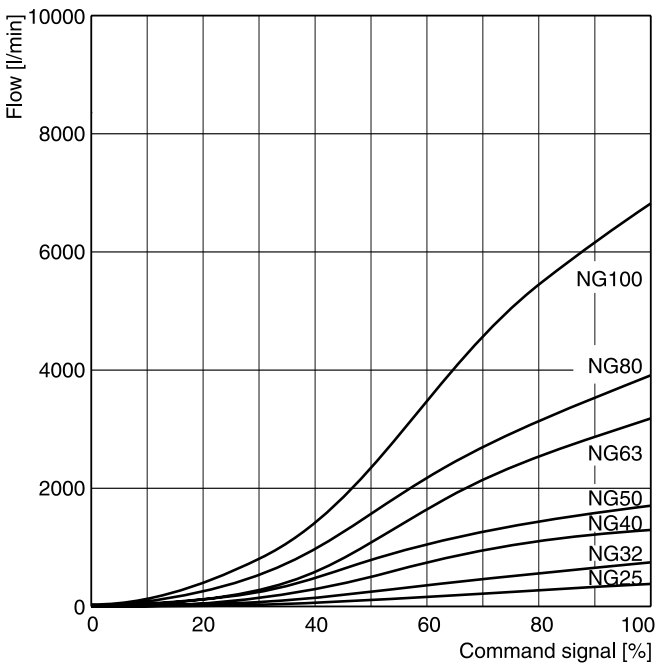

Opening point factory set to 3 %

Flow at different Δp $Q_{actual} = Q_{nominal} \bullet \sqrt{\Delta p_{actual} / \Delta p_{nominal}}$

Characteristic curve measured with HLP46 at 50 °C.

General								
Design		Proportional throttle valve with LVDT and integrated electronics, slip-in cartridge according to ISO 7368						
Nominal size	DIN	**NG25**	**NG32**	**NG40**	**NG50**	**NG63**	**NG80**	**NG100**
Mounting position		unrestricted						
Ambient temperature	[°C]	-20...+50						
Weight	[kg]	11	13	15	26	52	105	157
Vibration resistance	[g]	10 sinus 5...2000 Hz acc. IEC 68-2-6 10 (RMS) random noise 20...2000 Hz acc. IEC 68-2-36 15 shock acc. IEC 68-2-27						
Hydraulic								
Max. operating pressure	[bar]	Ports A, B, X and SP up to 350, XX observe accumulator pressure rating; port Y: max. 35						
Fluid		Hydraulic oil according to DIN 51524						
Fluid temperature	[°C]	-20...+60 (NBR: -25...+60)						
Viscosity recommended	[cSt] / [mm²/s]	30 ... 80						
Viscosity permitted	[cSt] / [mm²/s]	20 ... 400						
Filtration		ISO 4406; 18/16/13						
Nominal flow at Δp = 5 bar (linear)	[l/min]	420	850	1500	1900	3600	4500	8000
Recommended max. flow (linear)	[l/min]	800	2000	3000	4500	8000	13000	20000
Nominal flow at Δp = 5 bar (progressive)	[l/min]	380	750	1300	1700	3200	3900	6800
Recommended max. flow (progressive)	[l/min]	700	1750	2600	4000	7000	11250	17000
Flow direction		B to A / A to B						
Pilot pressure	[bar]	must be as high as system pressure						
Pilot oil supply		external via X						
Pilot oil drain		external via Y						
Leakage in pilot valve at 100 bar	[ml/min]	< 400						
Pilot valve size			NG06			NG10		
Max. pilot flow at 140 bar pilot pr.	[l/min]	23	30	40	40	70	80	100
Static/dynamic								
(for optimal dynamics see installation recommendation)								
Step response at pilot press. >140 bar	[ms]	10.5	12	14	20	17	23	28
Frequency response at pilot press. >140 bar								
Amplitude -3 dB; 10 % ±5 %	[Hz]	95	80	74	66	52	46	41
Phase -90°; 10 % +5 %	[Hz]	85	63	59	52	56	51	47
Hysteresis	[%]	< 0.1						
Sensitivity	[%]	< 0.05						
Temperature drift	[%/K]	< 0.025						

Electrical		
Duty ratio	[%]	100
Protection class		IP65 in accordance with EN 60529 (with correctly mounted plug-in connector)
Supply voltage / ripple	[V]	DC 22 ... 30, electric shut-off at < 19, ripple < 5 % eff., surge free
Current consumption max.	[A]	3.5
Pre-fusing	[A]	4.0 A medium lag
Input signal		
Code B Voltage	[V]	0...+10, ripple < 0,01 % eff., surge free
Impedance	[kOhm]	100
Code E Current	[mA]	0...+20, ripple < 0,01 % eff., surge free
Impedance	[Ohm]	< 250
Code S Current	[mA]	4...20, ripple < 0,01 % eff., surge free < 3,6 mA = disable, > 3,8 mA = enble on according to NAMUR NE43
Impedance	[Ohm]	< 250
Differential input max.	[V]	30 for terminal D and E against PE (terminal G) 11 for terminal D and E against 0V (terminal B)
Enable signal	[V]	5...30, Ri = > 8 kOhm
Diagnostic signal	[V]	0...+10 / +12.5 error detection, rated max. 5 mA
EMC		EN 61000-6-2, EN 61000-6-4
Electrical connection		6 + PE acc. EN 175201-804
Wiring min.	[mm²]	7 x 1.0 (AWG16) overall braid shield
Wiring length max.	[m]	50

8

Installation recommendations

The maximum pilot flow is given in the technical data. At insufficient pilot oil supply – e.g. because of long distances and/or small diameters – an accumulator can be connected to port XX. See selection guide for correct dimensions.

Selection guide

Size	Capacity [l]	Product type	Max. operating pressure [bar]	Recommended precharge pressure [bar]	Accu port XX
NG40	0.243	ADE016-25R	250	126	G ½
NG50	0.243	ADE032-21R	210	126	G ½
NG63	0.405	ADE050-21R	210	126	G ¾
NG80	0.647	ADE075-21R	210	126	G ¾
NG100	0.944	ADE100-21R	210	126	G ¾

Maximum operating pressure and precharge pressure of the accumulator must be adapted to the pilot pressure.

Block circuit diagram electronics

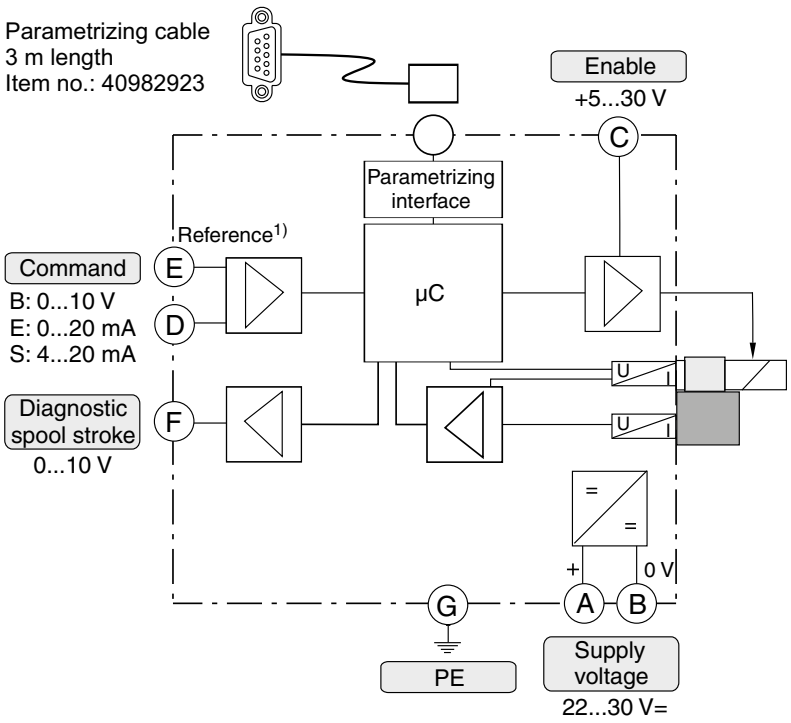

Connection diagrams electronics

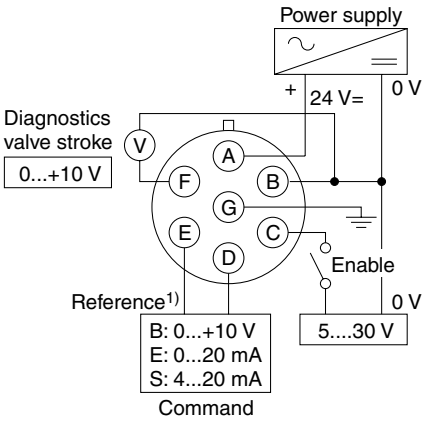

Female connector for NG63 to NG100
(EMC conform)

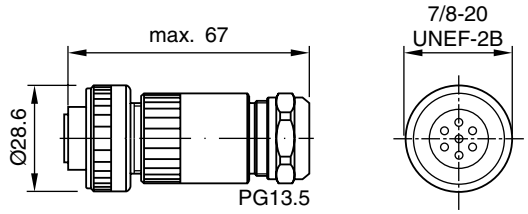

ID no. 5004072

Please order plugs separately.

Angle female connector for NG25 to NG50
(EMC conform)

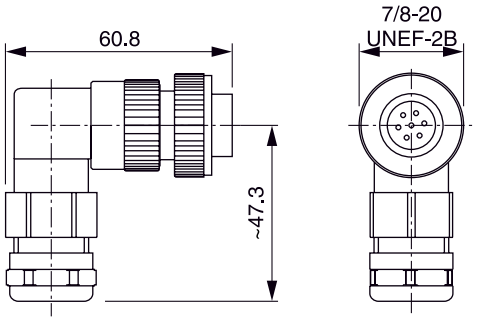

ID no. 5005160

1) Do not connect with the supply voltage zero.

NG25

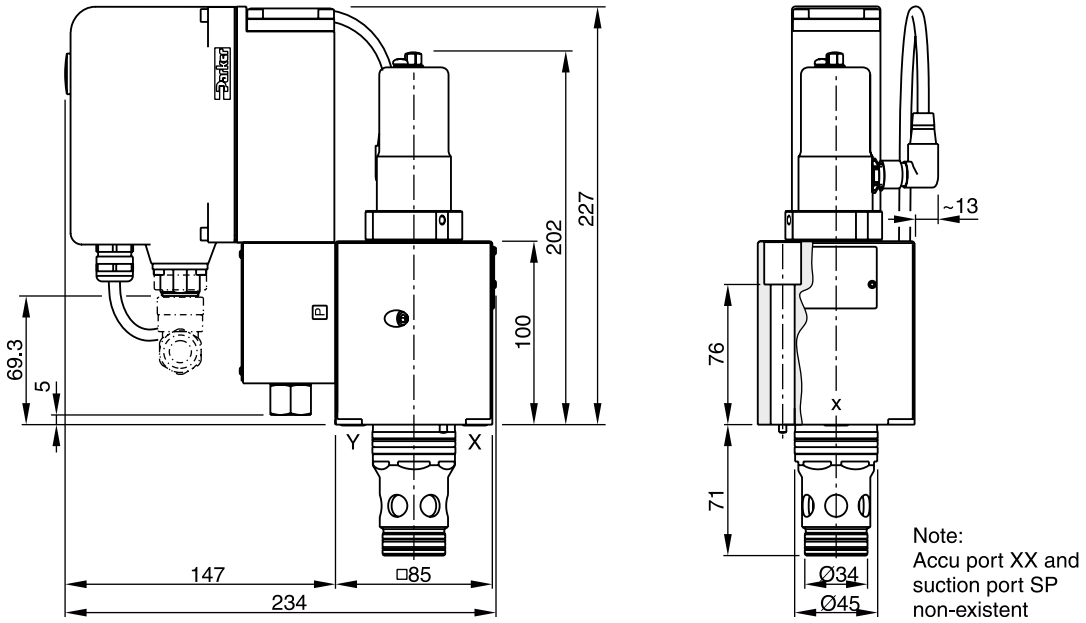

NG32

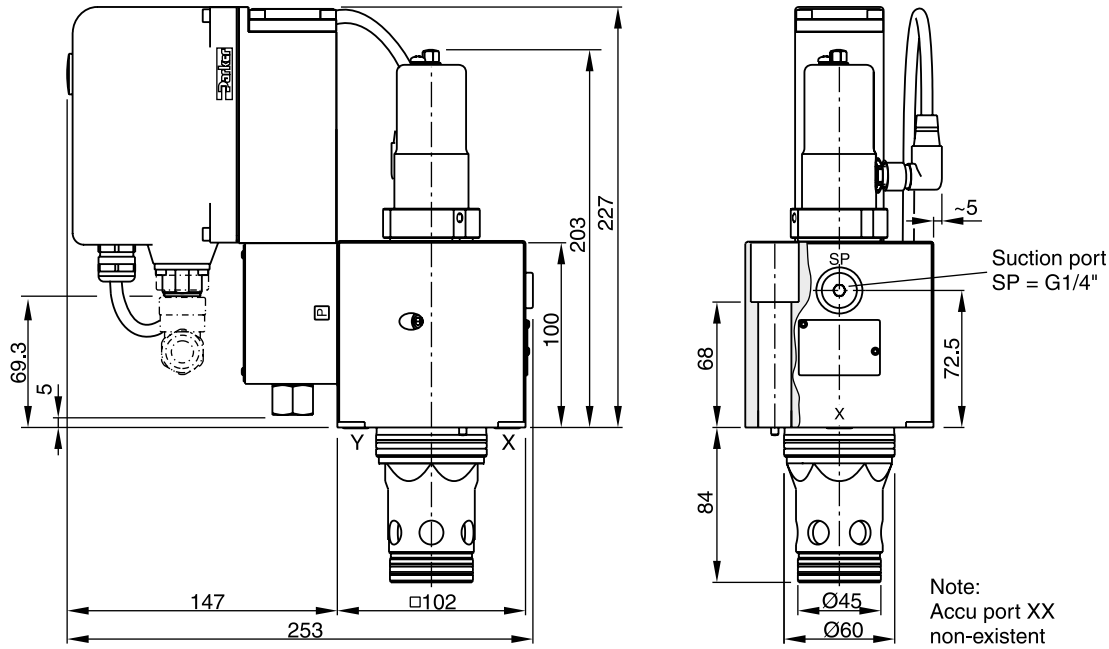

Suction port SP: Contact Parker for installation recommendation.

NG	Bolt kit -		Kit NBR	Kit FPM
25	BK504 4 x M12x100 ISO 4762-12.9	108 Nm	SK-TDP025EN30	SK-TDP025EV30
32	BK529 4 x M16x100 ISO 4762-12.9	264 Nm	SK-TDP032EN30	SK-TDP032EV30

TDP UK.indd 25.04.19

NG40

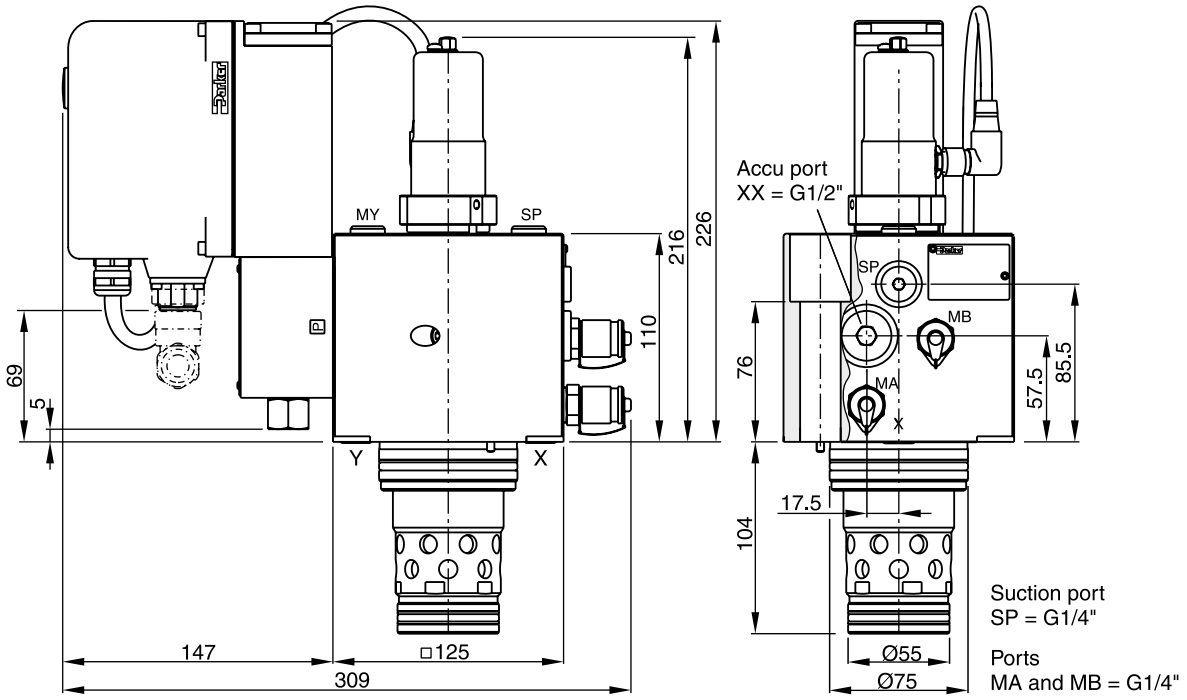

NG50

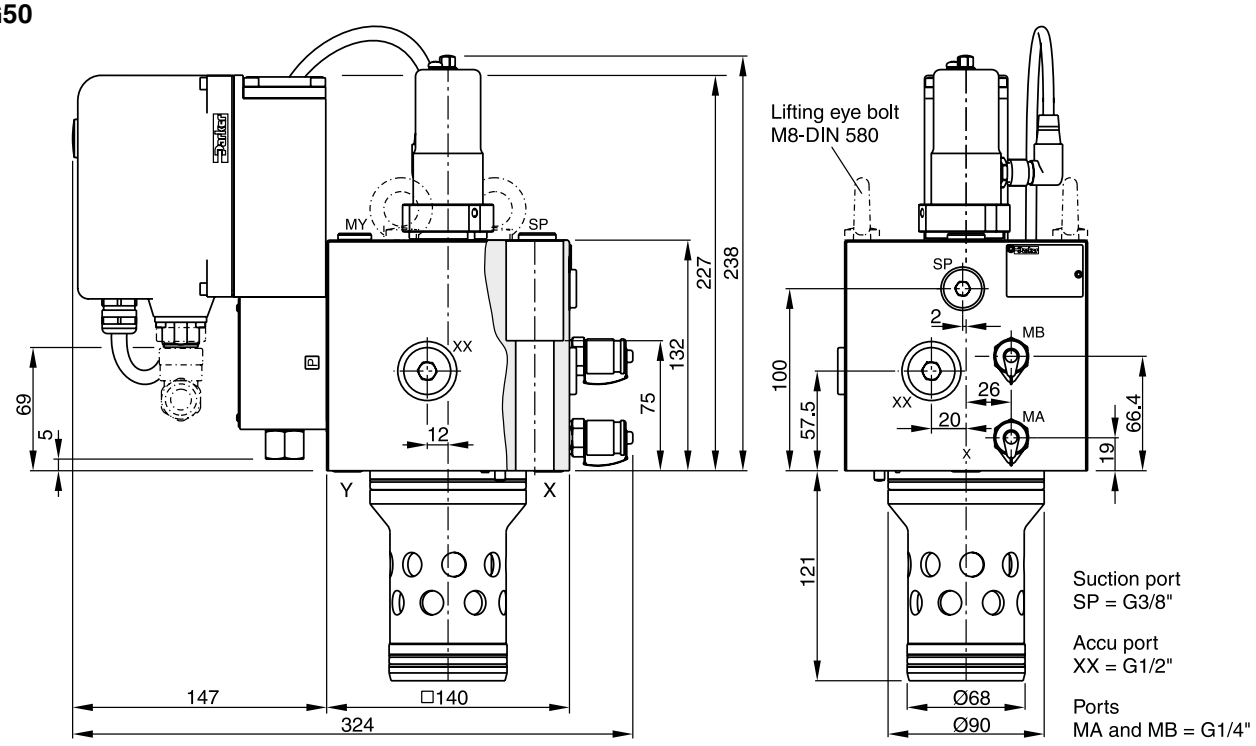

Lifting thread for disassembly M12

Suction port SP: Contact Parker for installation recommendation.

NG	Bolt kit -		Kit NBR	Kit FPM
40	BK481 4 x M20x110 ISO 4762-12.9	517 Nm	SK-TDP040EN30	SK-TDP040EV30
50	BK481 4 x M20x110 ISO 4762-12.9	517 Nm	SK-TDP050EN30	SK-TDP050EV30

NG63

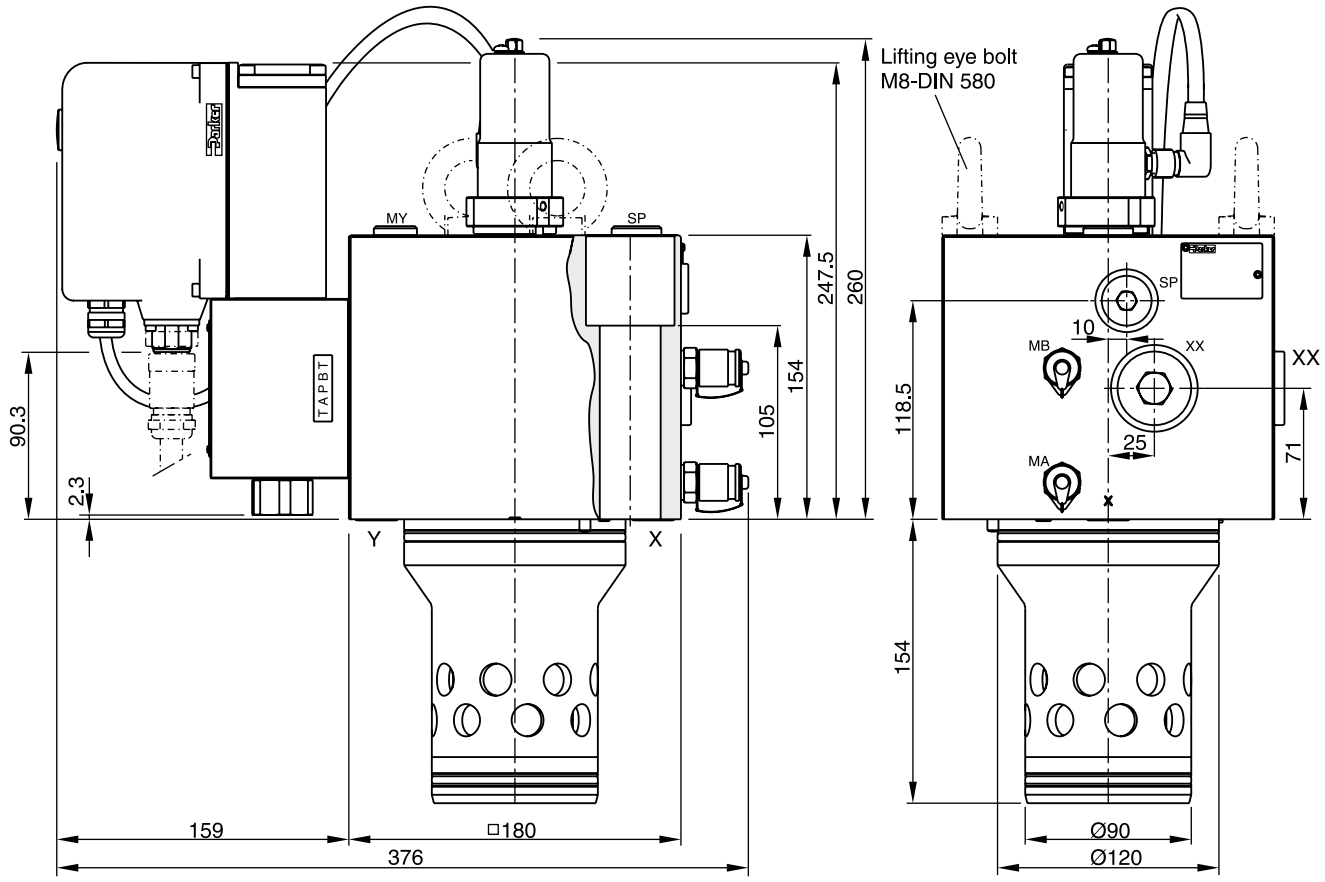

Suction port SP = G1/2"
Accu port XX = G3/4"
Ports MA and MB = G1/4"

Lifting thread for disassembly M12

Suction port SP: Contact Parker for installation recommendation.

NG	Bolt kit -		Kit NBR	Kit FPM
63	BK518 4 x M30x160 ISO 4762-12.9	1775 Nm	SK-TDP063EN30	SK-TDP063EV30

NG80

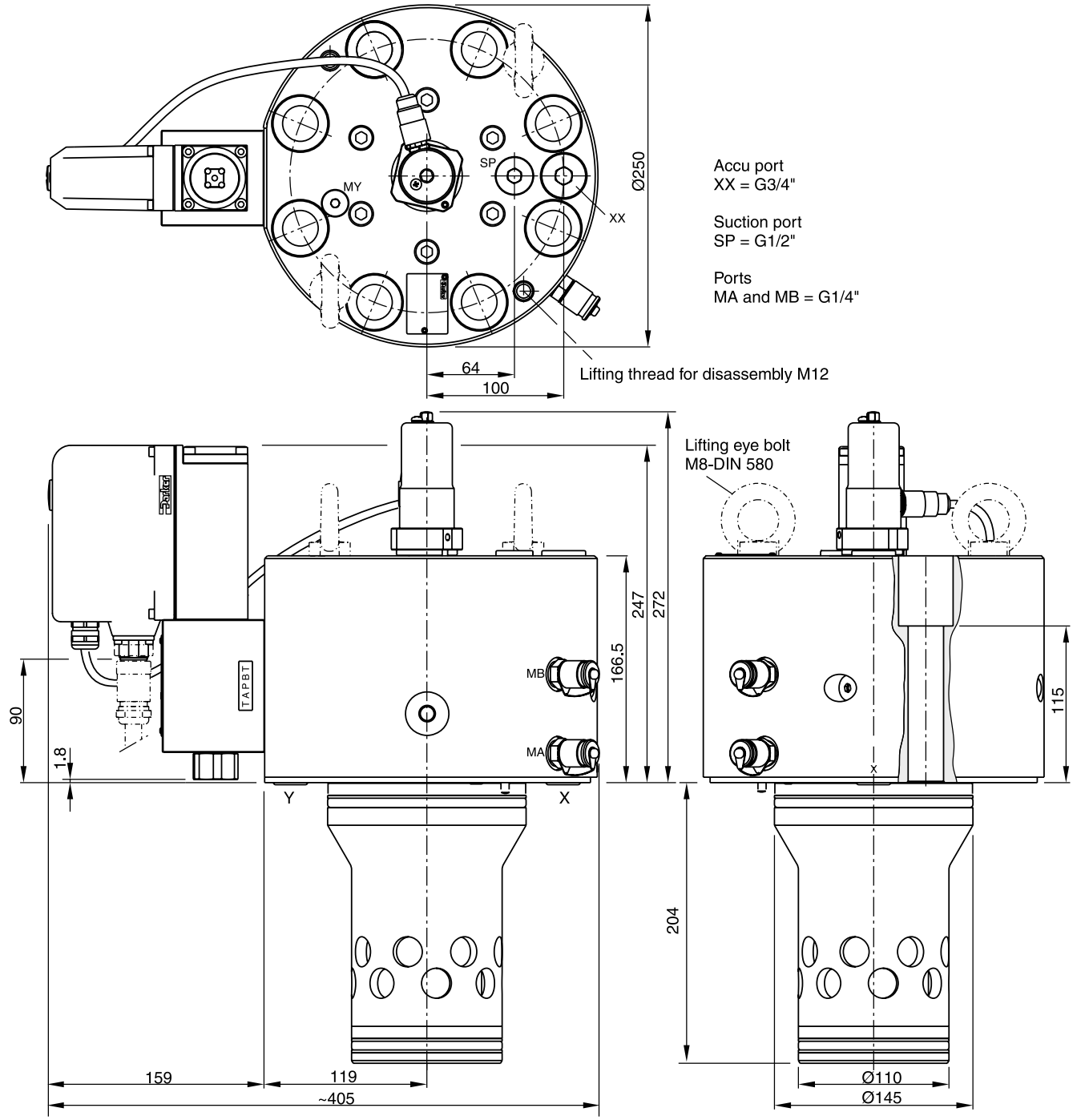

Suction port SP: Contact Parker for installation recommendation.

NG	Bolt kit -		Kit NBR	Kit FPM
80	BK530 8x M24x160 ISO 4762-12.9	890 Nm	SK-TDP080EN30	SK-TDP080EV30

NG100

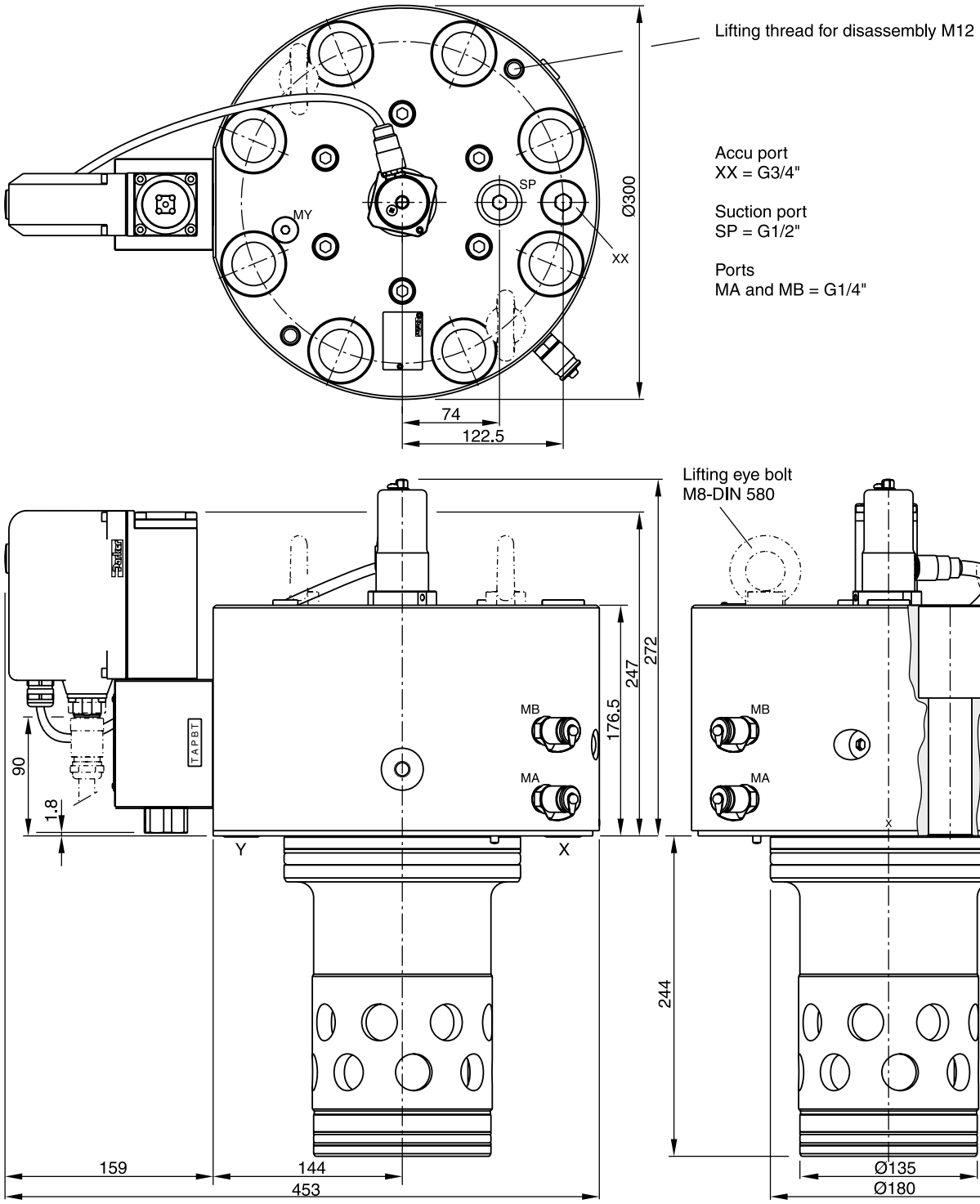

Suction port SP: Contact Parker for installation recommendation.

NG	Bolt kit -		Kit NBR	Kit FPM
100	BK531 8x M30x150 ISO 4762-12.9	1775 Nm	SK-TDP100EN30	SK-TDP100EV30

Code: ISO 7368-B*-*-2-A/B
NG25 to NG63

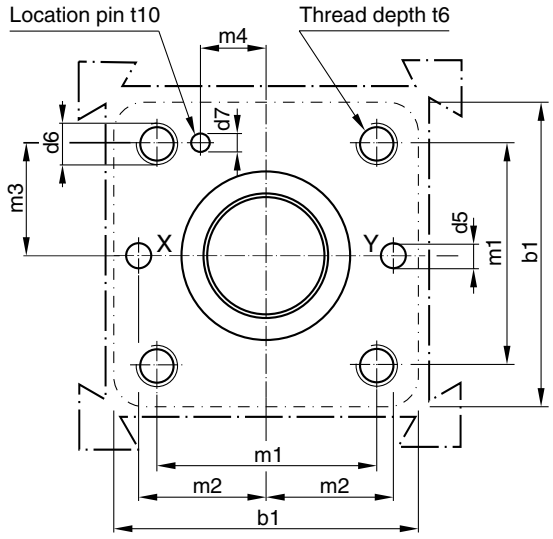

Code: ISO 7368-B*-*-2-A
NG80 to NG100

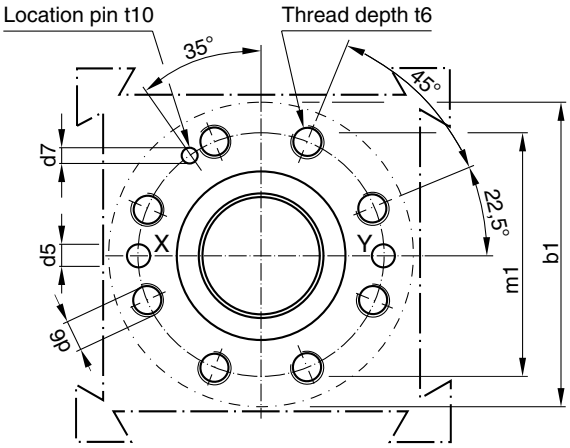

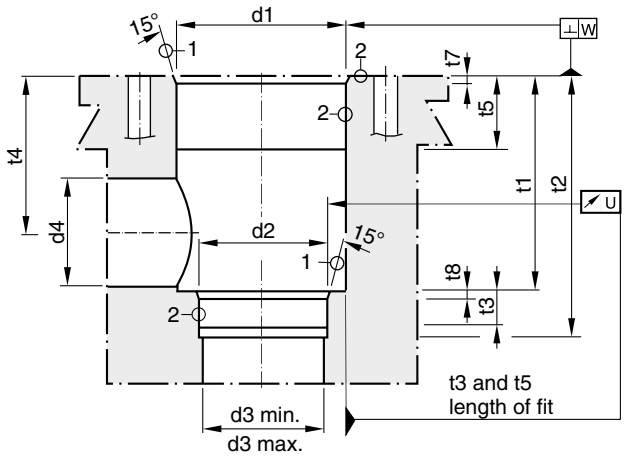

Required surface finish:

$\textcircled{1} = \sqrt{R_{max}16}, \textcircled{2} = \sqrt{R_{max}8}$

Deviating from ISO 7368 it is advisable to increase the diameters d3, d4 and d5.

Size	b1	d1 H7	d2 H7	d3	d3 max	d4 max[1)]	d5 max	d6	d7 H13	m1±0.2	m2±0.2	m3±0.2
25	85	45	34	25	27	32	6	M12	4	58	33	29
32	102	60	45	32	44	50	8	M 16	6	70	41	35
40	125	75	55	40	54	63	10	M 20	6	85	50	42.5
50	140	90	68	50	67	80	10	M 20	8	100	58	50
63	180	120	90	63	89	100	12	M 30	8	125	75	62.5
80	250	145	110	80	109	110	16	M 24	10	200	—	—
100	300	180	135	100	134	150	20	M 30	10	245	—	—

Size	m4±0.2	t1+0.5	t2+1	t3	t4	t4 max[1)]	t5	t6	t7	t8	t10	U	W
25	16	58	72	12	44	40.5	30	35	25	25	10	0.03	0.05
32	17	70	85	13	52	44	15	35	2.5	2.5	10	0.03	0.1
40	23	87	105	15	64	54	15	45	3	3	10	0.05	0.1
50	30	100	122	17	72	59	17	45	4	3	10	0.05	0.1
63	38	130	155	20	95	78	19	65	4	4	10	0.05	0.2
80	—	175	205	25	130	115	32	50	5	5	10	0.05	0.2
100	—	210	245	29	155	133	32	53	5	5	10	0.05	0.2

[1)] Only in combination with d4max and t4max.

2-way servo proportional valves with VCD® technology and shut-off valve series TEP base on the TDP range. Additionally, TEP valves are equipped with a direction control valve for shutting off the pilot system.

Structure and function

The 2-way servo proportional valves with shut-off valve TEP have a 2-stage design consisting of a DFplus pilot valve and a main stage with poppet and LVDT.

With the DFplus pilot valve the TEP achieves extremely fast response times: from 10.5 ms (NG25) up to 28 ms (NG100) with an accuracy of <0.1 % of the nominal flow. The pilot valve actively controls the poppet - independent of the pressure conditions in the main ports. It is basically required that the pilot pressure is at the level of the system pressure. At low system pressure the pilot pressure should be min. 140 bar, when high valve dynamics are desired.

The integrated electronics in the pilot of the TEP has two control loops for the main poppet and the pilot spool.

In the de-energized position of the shut-off valve, the upper pilot control surface of the main spool is pressurized, the lower one is relieved to tank. Independent of the DFplus pilot valve, the main spool remains always closed, if the shut-off valve is not activated.

If the solenoid of the shut-off valve is energized, the position of the main spool is controlled by DFplus pilot valve and LVDT.

The shut-off valve can be ordered with position control optionally.



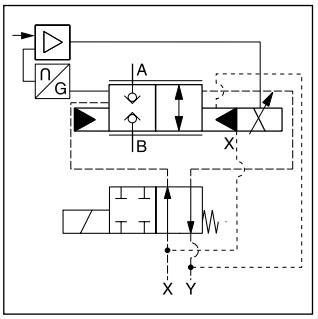

TEP040

Features

- Active pilot operated 2-way servo proportional valves with shut-off valve
- Flow directions A-B and B-A
- Cavity and mounting pattern according to ISO 7368
- Fast step responses
- Completely mounted and adapted unit with integrated electronics
- In order to ensure the closed position pilot pressure is required
- 7 sizes, NG25 up to NG100
- Shut-off function

8

TEP040

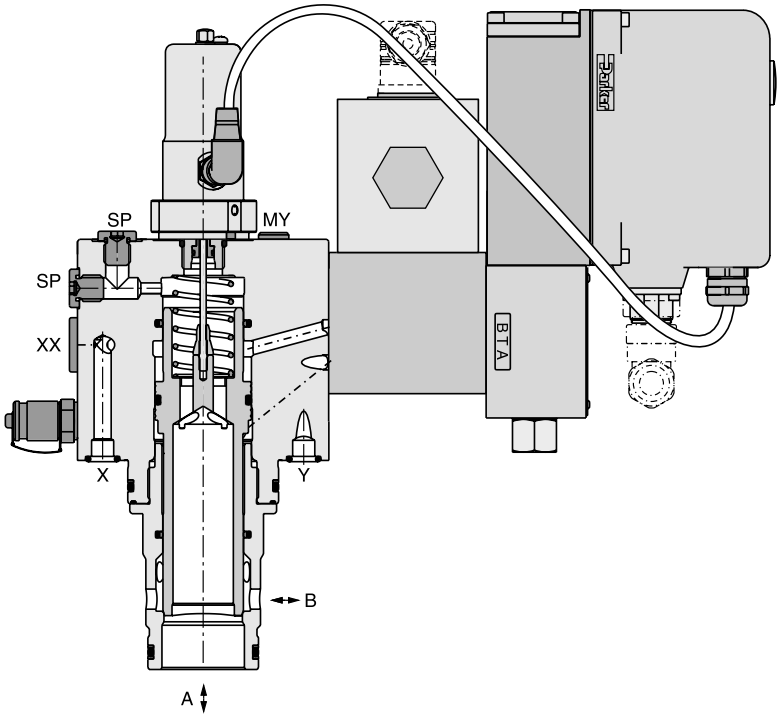

Function symbol

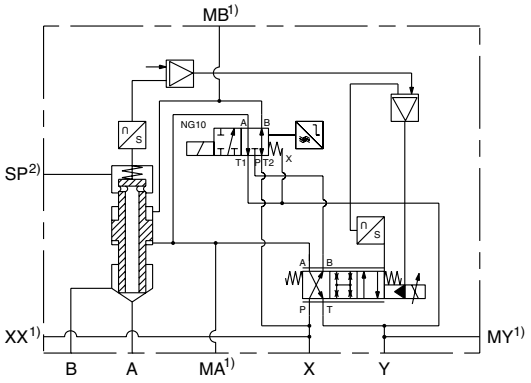

1) NG25 and NG32 without accu port XX and without port MA, MB and MY.
2) NG25 without suction port SP.

Ordering code

TEP		E	H		9	C	2				J	

TEP — 2-way servo proportional valve with shut-off valve and LVDT

Nominal size

Code	Nominal size
025	NG25
032	NG32
040	NG40
050	NG50
063	NG63
080	NG80
100	NG100

E — Slip-in cartridge

H — Closed loop, VCD® performance, integrated electronics

Flow characteristic

Code	Flow characteristic
7	progressive
9	linear

9 — Nominal flow

C — Flow direction B → A, A → B

2 — Pilot oil (supply external, drain external)

Seal

Code	Seal
N	NBR
V	FPM
H	for HFC fluid

Command signal

Code	Command signal
B	0...+10 V
E	0...+20 mA
S	4...+20 mA

Accessories

Code	Accessories shut-off valve
0	without position control
7 [1)]	with position control

J — Solenoid check valve 24 V= / 1.25 A

Design series (not required for ordering)

The DFplus pilot valve is also available with EtherCAT interface, see chapter 3, D*FP and D*1FP with EtherCAT.

Please order connector separately.
Angle female connector must be used for NG25 to NG50.

Characteristic flow/signal line

Δp = 5 bar

Linear (code 9)

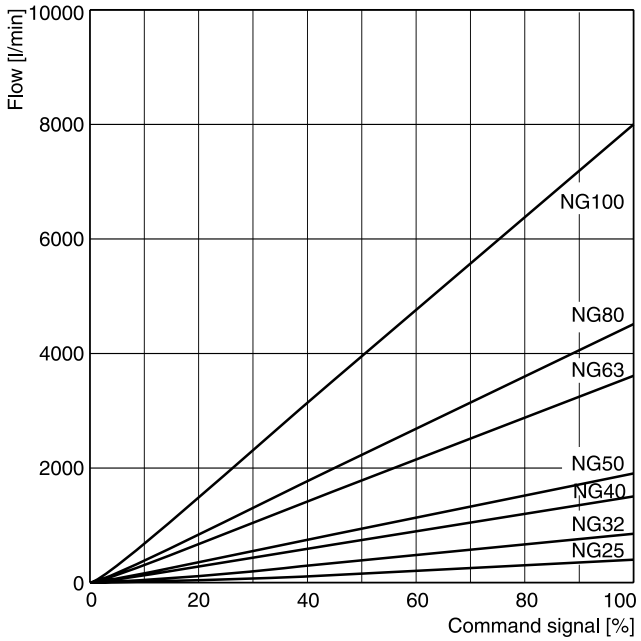

Progressive (code 7)

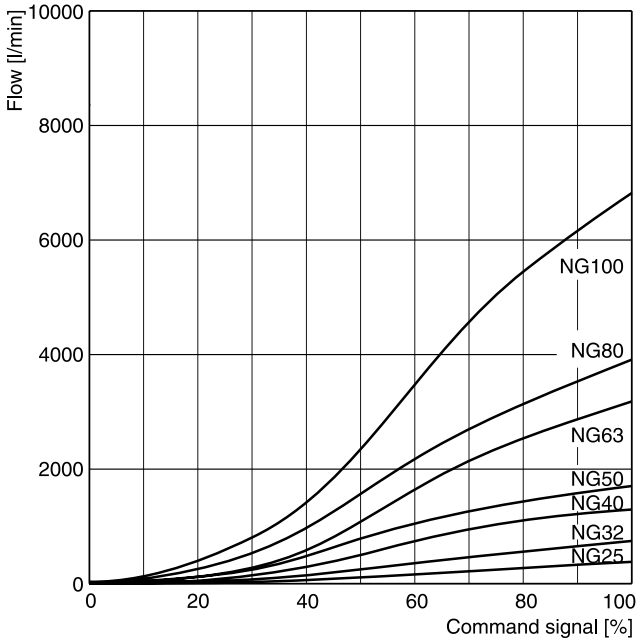

Opening point factory set to 3 %

Characteristic curve measured with HLP46 at 50 °C.

Flow at different Δp $Q_{actual} = Q_{nominal} \bullet \sqrt{\Delta p_{actual} / \Delta p_{nominal}}$

[1)] Please order female connector M12x1 separately (see accessories, directional control valves, female connector M12x1 (order no.: 5004109).

General								
Design			Proportional throttle valve with LVDT and integrated electronics, slip-in cartridge according to ISO 7368					
Nominal size	DIN	**NG25**	**NG32**	**NG40**	**NG50**	**NG63**	**NG80**	**NG100**
Mounting position		unrestricted						
Ambient temperature	[°C]	-20...+50						
Weight	[kg]	11	13	15	26	52	105	157
Vibration resistance	[g]	10 sinus 5...2000 Hz acc. IEC 68-2-6 10 (RMS) random noise 20...2000 Hz acc. IEC 68-2-36 15 shock acc. IEC 68-2-27						
Hydraulic								
Max. operating pressure	[bar]	Ports A, B, X and SP up to 350; XX observe accumulator pressure rating; port Y: max. 35						
Fluid		Hydraulic oil according to DIN 51524						
Fluid temperature	[°C]	-20...+60 (NBR: -25...+60)						
Viscosity recommended	[cSt] / [mm²/s]	30 ... 80						
Viscosity permitted	[cSt] / [mm²/s]	20 ... 400						
Filtration		ISO 4406; 18/16/13						
Nominal flow at Δp= 5 bar (linear)	[l/min]	420	850	1500	1900	3600	4500	8000
Recommended max. flow (linear)	[l/min]	800	2000	3000	4500	8000	13000	20000
Nominal flow at Δp= 5 bar (progressive)	[l/min]	380	750	1300	1700	3200	3900	6800
Recommended max. flow (progressive)	[l/min]	700	1750	2600	4000	7000	11250	17000
Flow direction		B to A / A to B						
Pilot pressure	[bar]	must be as high as system pressure						
Pilot oil supply		external via X						
Pilot oil drain		external via Y						
Leakage in pilot valve at 100 bar	[ml/min]	< 400						
Pilot valve size			NG06			NG10		
Max. pilot flow at 140 bar pilot pr.	[l/min]	23	30	40	40	70	80	100
Static/dynamic								
(for optimal dynamics see installation recommendation)								
Step response at pilot press. >140 bar	[ms]	10.5	12	14	20	17	23	28
Frequency response at pilot press. >140 bar								
Amplitude -3 dB; 10 % ±5 %	[Hz]	95	80	74	66	52	46	41
Phase -90°; 10 % +5 %	[Hz]	85	63	59	52	56	51	47
Hysteresis	[%]	< 0.1						
Sensitivity	[%]	< 0.05						
Temperature drift	[%/K]	< 0.025						

Electrical				
Duty ratio			[%]	100
Protection class				IP65 in accordance with EN 60529 (with correctly mounted plug-in connector)
Supply voltage / ripple			[V]	DC 22 ... 30, electric shut-off at < 19, ripple < 5 % eff., surge free
Current consumption max.			[A]	3.5
Pre-fusing			[A]	4.0 A medium lag
Input signal	Code B	Voltage	[V]	0...+10, ripple < 0.01 % eff., surge free
		Impedance	[kOhm]	100
	Code E	Current	[mA]	0...+20, ripple < 0.01 % eff., surge free
		Impedance	[Ohm]	< 250
	Code S	Current	[mA]	4...20, ripple < 0.01 % eff., surge free < 3.6 mA = disable, > 3.8 mA = enable on according to NAMUR NE43
		Impedance	[Ohm]	< 250
Differential input max.			[V]	30 for terminal D and E against PE (terminal G) 11 for terminal D and E against 0V (terminal B)
Enable signal			[V]	5...30, Ri = > 8 kOhm
Diagnostic signal			[V]	0...+10 / +12.5 error detection, rated max. 5 mA
EMC				EN 61000-6-2, EN 61000-6-4
Electrical connection				6 + PE acc. EN 175201-804
Wiring min.			[mm²]	7 x 1.0 (AWG16) overall braid shield
Wiring length max.			[m]	50

[1] If valves with onboard electronics are used in safety-related parts of control systems, in case the safety function is requested, the valve electronics voltage supply is to be switched off by a suitable switching element with sufficient reliability.

Installation recommendations

The maximum pilot flow is given in the technical data. At insufficient pilot oil supply - e.g. because of long distances and/or small diameters - an accumulator can be connected to port XX. See selection guide for correct dimensions.

Selection guide

Size	Capacity [l]	Product type	Max. operating pressure [bar]	Recommended precharge pressure [bar]	Accu port XX
NG40	0.243	ADE016-25R	250	126	G ½
NG50	0.243	ADE032-21R	210	126	G ½
NG63	0.405	ADE050-21R	210	126	G ¾
NG80	0.647	ADE075-21R	210	126	G ¾
NG100	0.944	ADE100-21R	210	126	G ¾

Maximum operating pressure and precharge pressure of the accumulator must be adapted to the pilot pressure.

Block circuit diagram electronics

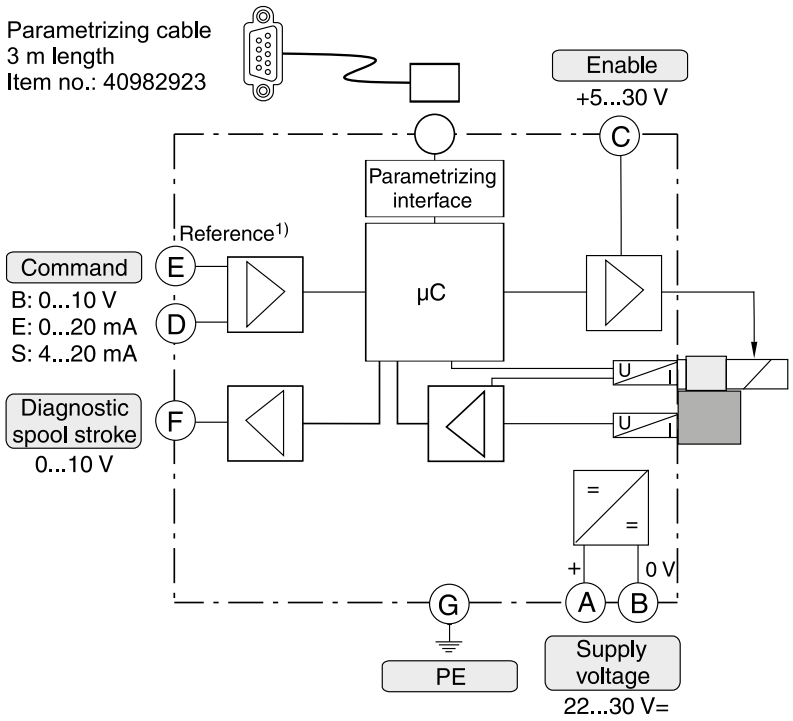

Connection diagrams electronics

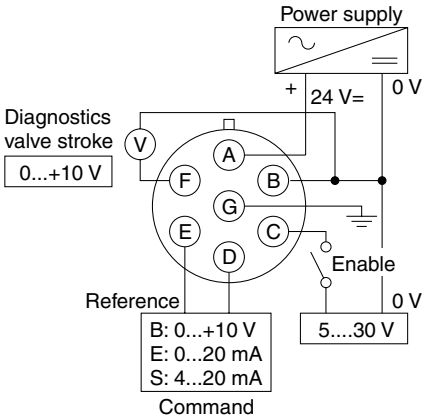

Female connector for NG63 to NG100

(EMC conform)

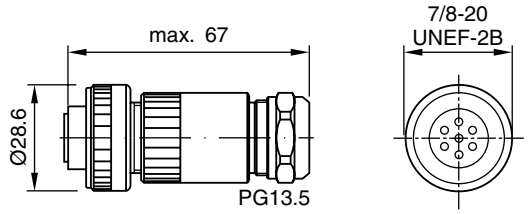

ID no. 5004072

Please order plugs separately.

Angle female connector for NG25 to NG50

(EMC conform)

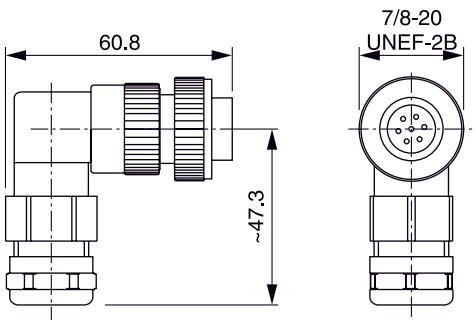

ID no. 5005160

[1] Do not connect with the supply voltage zero.

Single solenoid valve

Electrical characteristics of position control as per IEC 61076-2-101 (M12x1)

Supply voltage	[VDC]	24
Tolernace supply voltage	[%]	±20
Ripple supply voltage	[%]	≤10
Polarity protection	[V]	300
Current consumption without load	[mA]	≤20
Switching hysteresis	[mm]	<0.06
Max. output current per channel, ohmic	[mA]	250
Ambient temperature	[°C]	-20 … +60
Protection		IP65 acc. EN 60529 (with correctly mounted plug-in connector)
Min. distance to next AC solenoid	[m]	0.1
Interface		M12x1 to IEC 61076-2-101
CE conform		EN 61000-4-2 / EN 61000-4-4 / EN 61000-4-6 [1] / ENV 50140 / ENV 50204

[1] Only guaranted with screened cable and female connector

M12 pin assignment

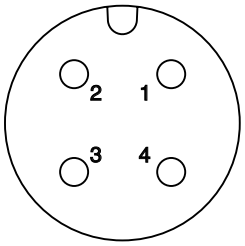

1 + U_S 19.2...28.8 V
2 Out B: normally open
3 0V
4 Out A: normally closed

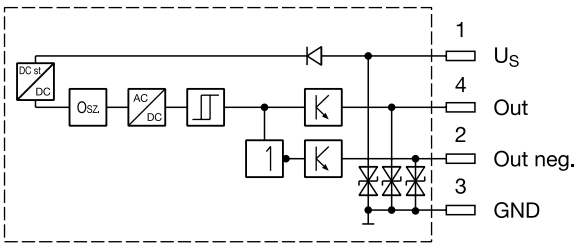

Outputs: Open collector

Please order female connector M12x1 separately (see accessories, directional control valves, female connector M12x1 (order no.: 5004109).

8

NG25

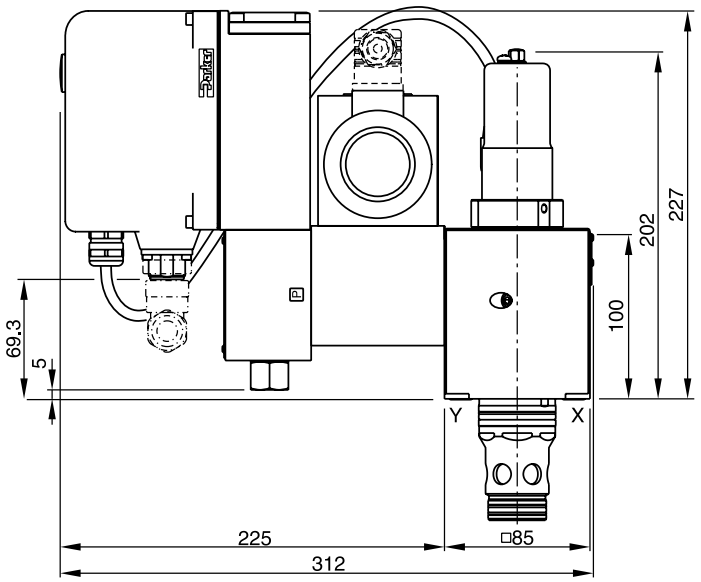

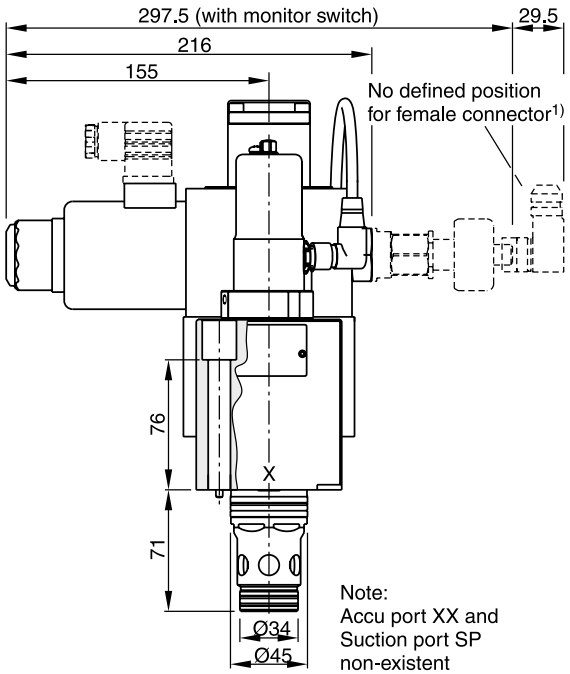

NG32

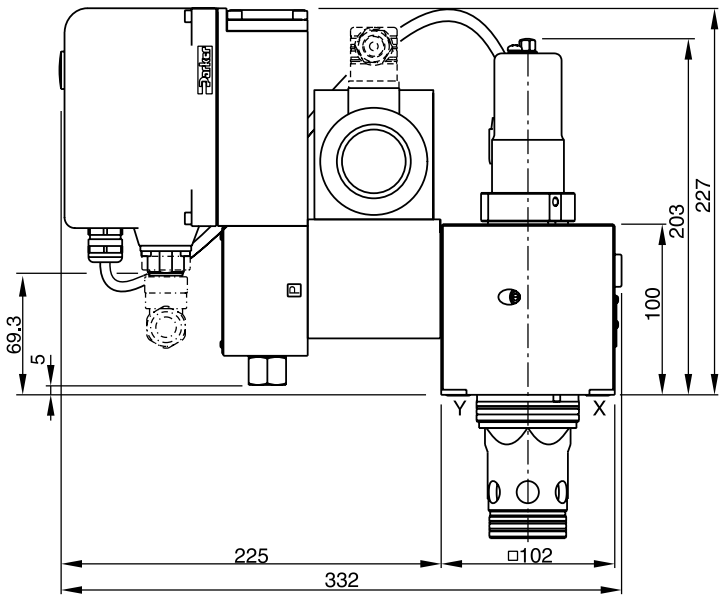

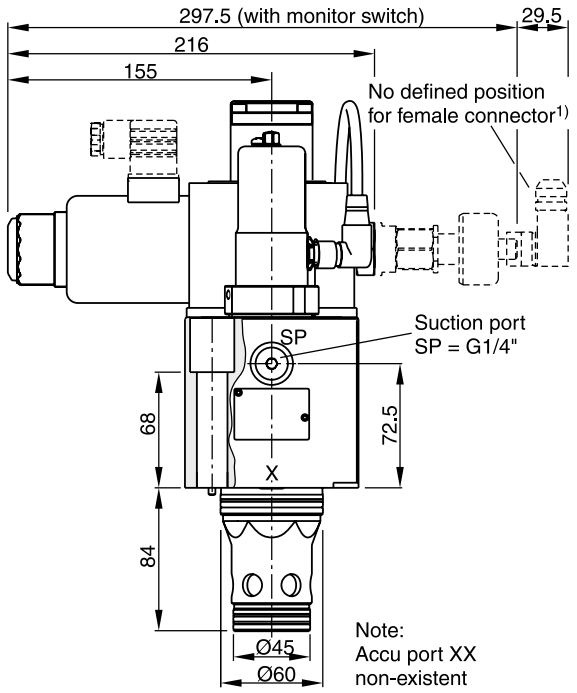

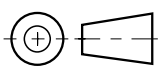

Suction port SP: Contact Parker for installation recommendation.

NG	Bolt kit -		Kit NBR	Kit FPM
25	BK504 4 x M12x100 ISO 4762-12.9	108 Nm	SK-TEP025EN	SK-TEP025EV
32	BK529 4 x M16x100 ISO 4762-12.9	264 Nm	SK-TEP032EN	SK-TEP032EV

1) Please order female connector M12x1 separately (see accessories, directional control valves, female connector M12x1 (order no.: 5004109).

NG40

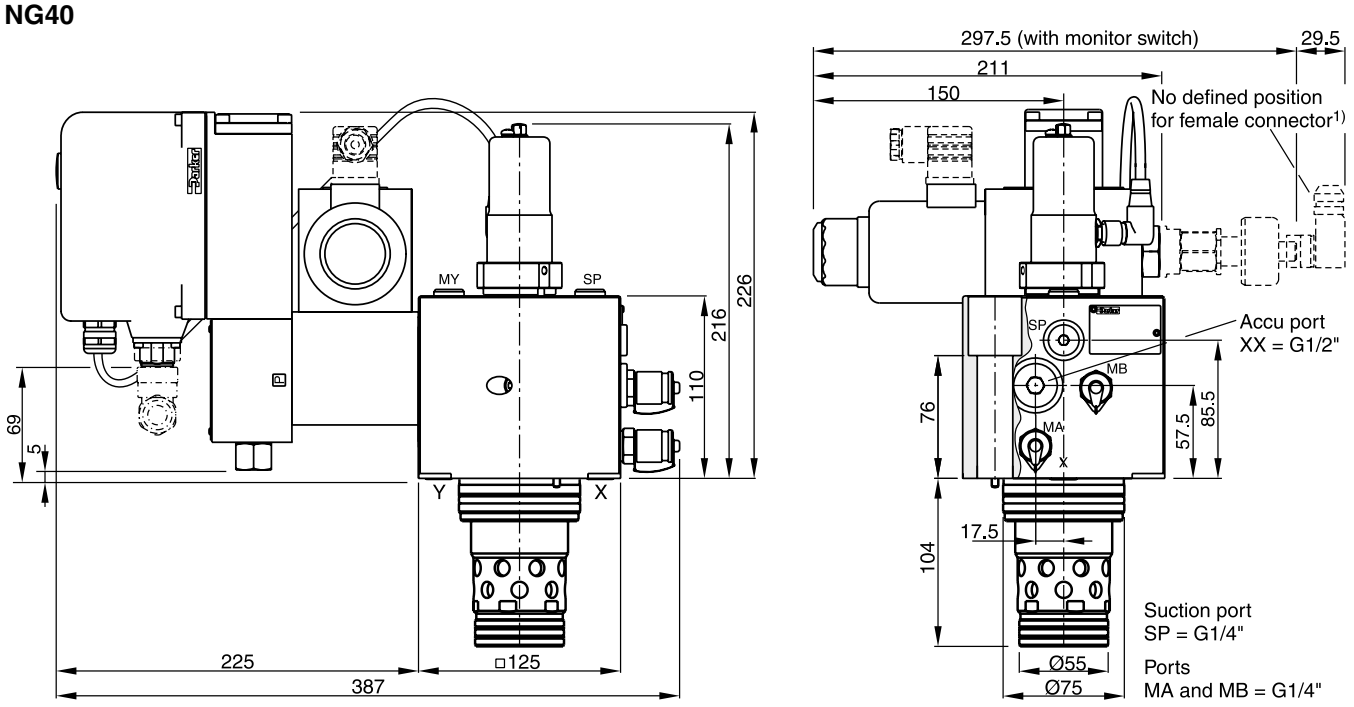

NG50

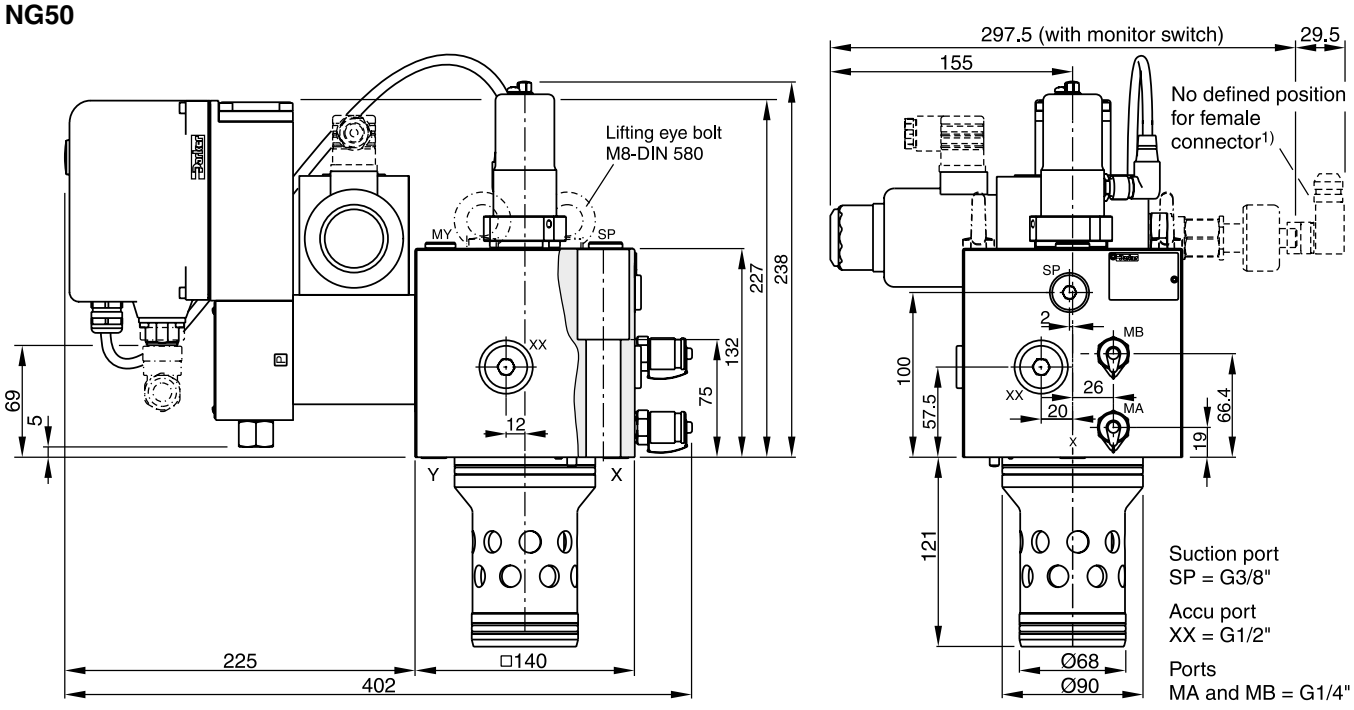

Lifting thread for disassembly M12

Suction port SP: Contact Parker for installation recommendation.

NG	Bolt kit -		Kit NBR	Kit FPM
40	BK481 4 x M20x110 ISO 4762-12.9	517 Nm	SK-TEP040EN	SK-TEP040EV
50	BK481 4 x M20x110 ISO 4762-12.9	517 Nm	SK-TEP050EN	SK-TEP050EV

1) Please order female connector M12x1 separately (see accessories, directional control valves, female connector M12x1 (order no.: 5004109).

NG63

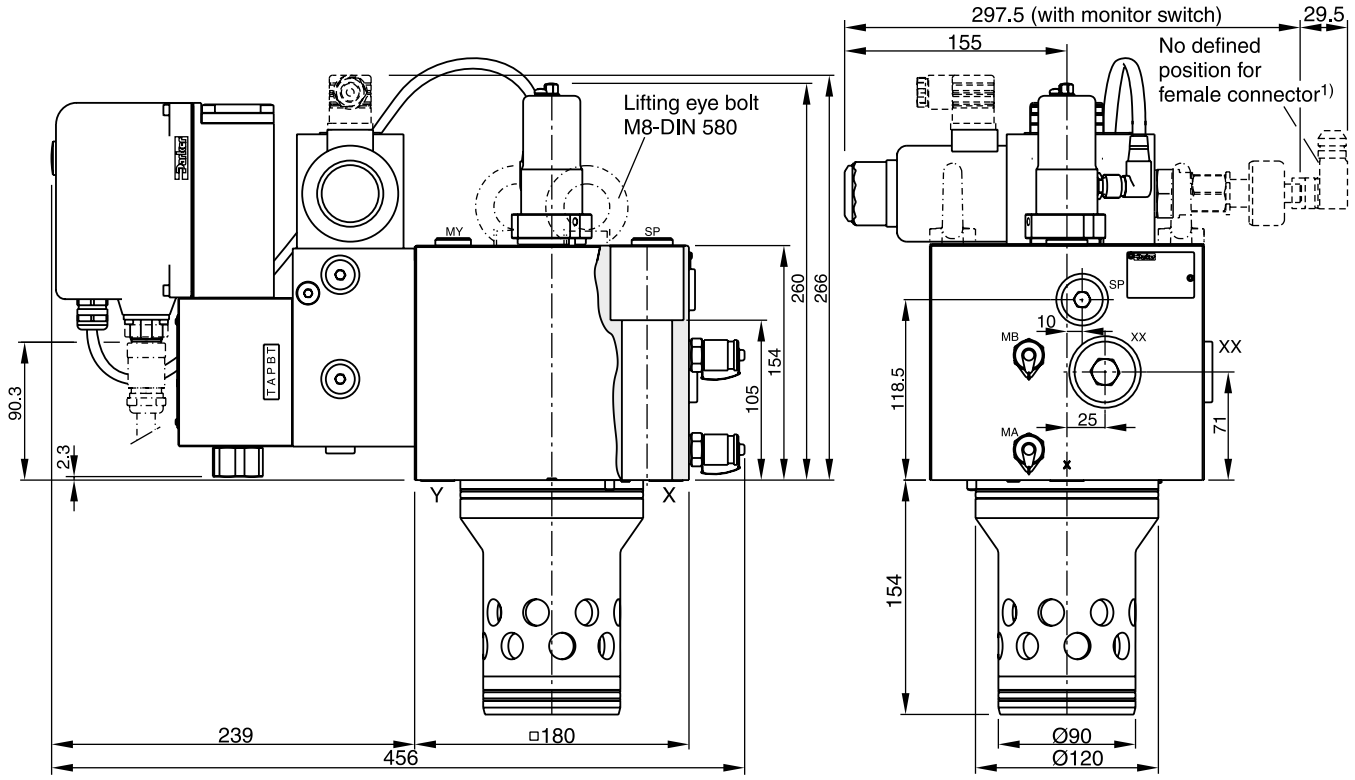

Suction port SP = G1/2" | Accu port XX = G3/4" | Ports MA and MB = G1/4"

Lifting thread for disassembly M12

8

Suction port SP: Contact Parker for installation recommendation.

NG	Bolt kit -		Kit NBR	Kit FPM
63	BK518 4x M30x160 ISO 4762-12.9	1775 Nm	SK-TEP063EN	SK-TEP063EV

1) Please order female connector M12x1 separately (see accessories, directional control valves, female connector M12x1 (order no.: 5004109).

NG80

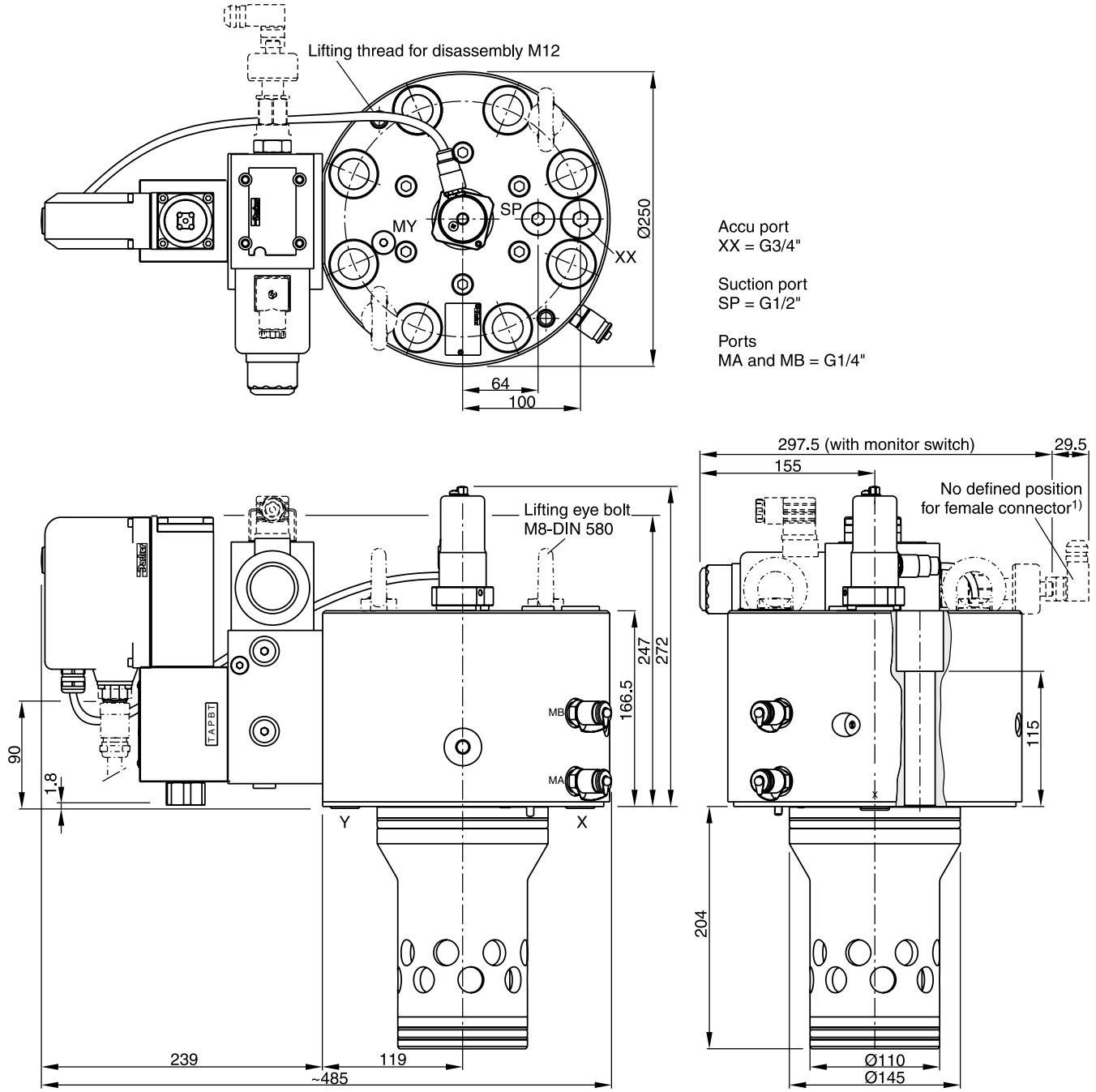

Suction port SP: Contact Parker for installation recommendation.

NG	Bolt kit -		Kit NBR	Kit FPM
80	BK530 8x M24x160 ISO 4762-12.9	890 Nm	SK-TEP080EN	SK-TEP080EV

1) Please order female connector M12x1 separately (see accessories, directional control valves, female connector M12x1 (order no.: 5004109).

NG100

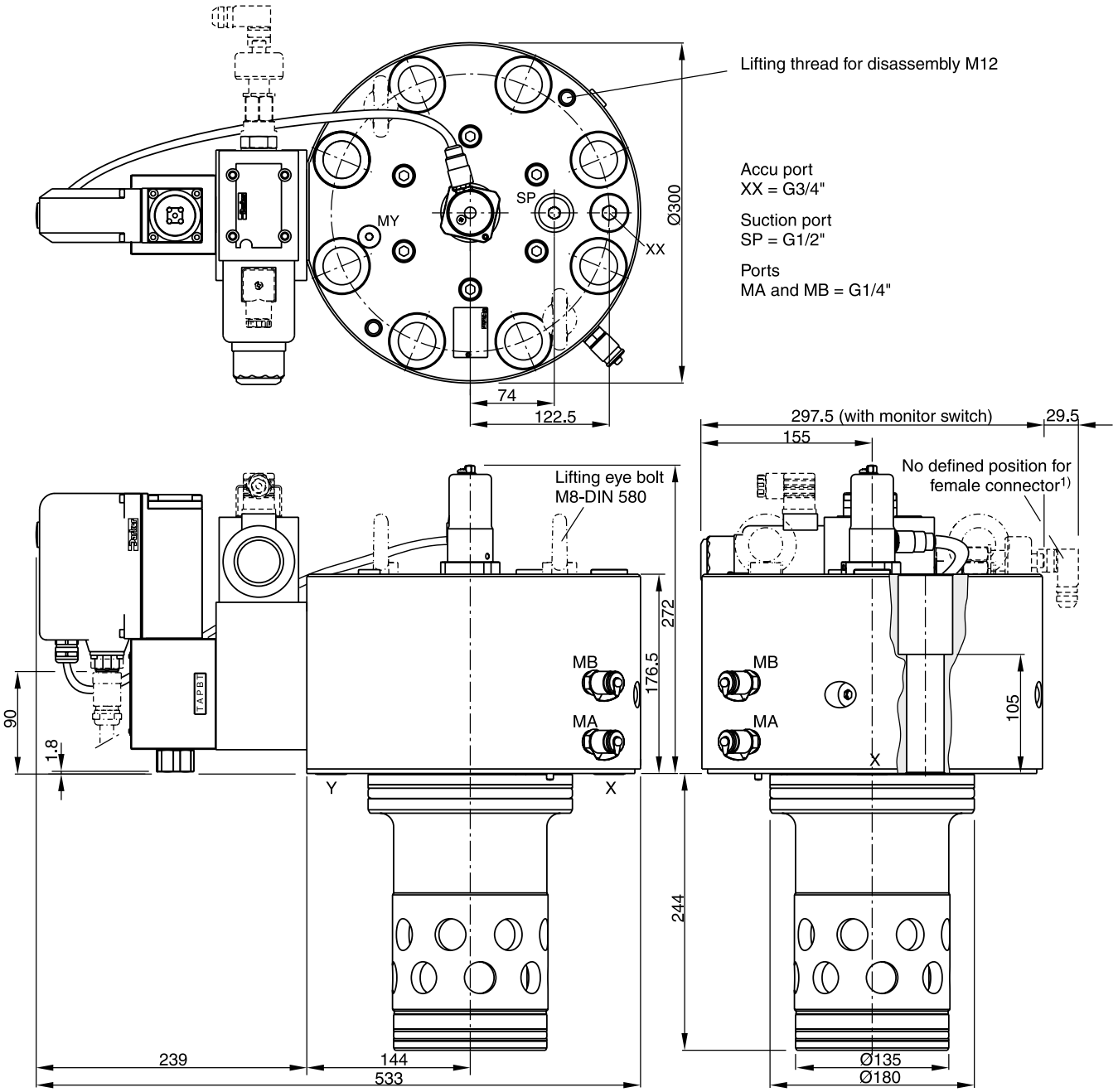

Suction port SP: Contact Parker for installation recommendation.

NG	Bolt kit -		Kit NBR	Kit FPM
100	BK531 8x M30x150 ISO 4762-12.9	1775 Nm	SK-TEP100EN	SK-TEP100EV

1) Please order female connector M12x1 separately (see accessories, directional control valves, female connector M12x1 (order no.: 5004109).

Code: ISO 7368-B*-*-2-A/B
NG25 to NG63

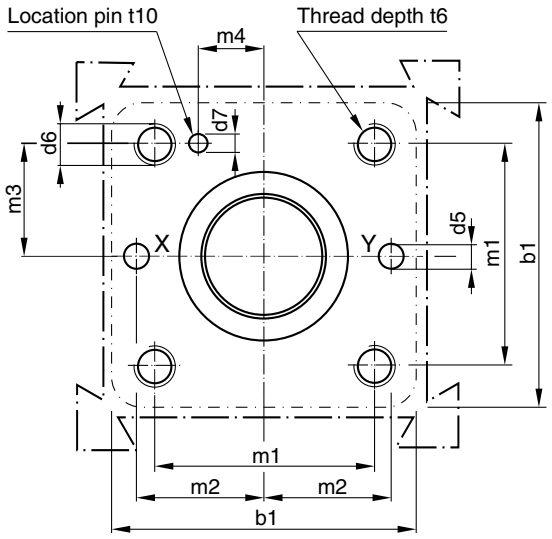

Code: ISO 7368-B*-*-2-A
NG80 to NG100

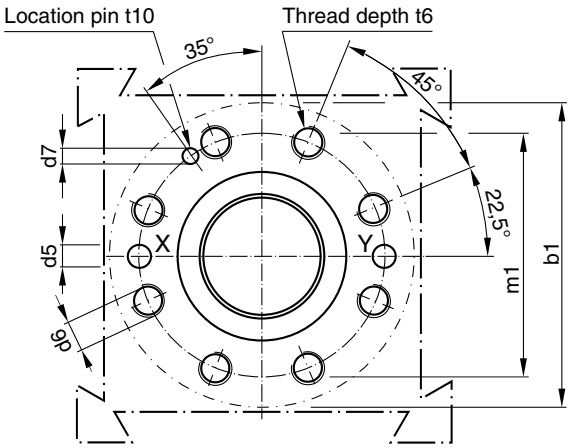

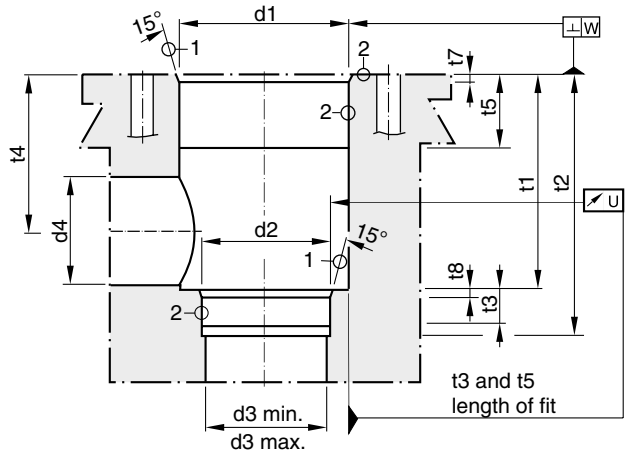

Required surface finish:

$(1) = \sqrt{R_{max}16}, (2) = \sqrt{R_{max}8}$

Deviating from ISO 7368 it is advisable to increase the diameters d3, d4 and d5.

Size	b1	d1 H7	d2 H7	d3 / d4	d3 max	d4 max[1)]	d5	d6	d7 H13	m1±0.2	m2±0.2	m3±0.2
25	85	45	34	25	27	32	6	M 12	4	58	33	29
32	102	60	45	32	44	50	8	M 16	6	70	41	35
40	125	75	55	40	54	63	10	M 20	6	85	50	42.5
50	140	90	68	50	67	80	10	M 20	8	100	58	50
63	180	120	90	63	89	100	12	M 30	8	125	75	62.5
80	250	145	110	80	109	110	16	M 24	10	200	—	—
100	300	180	135	100	134	150	20	M 30	10	245	—	—

Size	m4±0.2	t1+0.5	t2+1	t3	t4	t4 max[1)]	t5	t6	t7	t8	t10	U	W
25	16	58	72	12	44	40.5	30	35	25	25	10	0.03	0.05
32	17	70	85	13	52	44	15	35	2.5	2.5	10	0.03	0.1
40	23	87	105	15	64	54	15	45	3	3	10	0.05	0.1
50	30	100	122	17	72	59	17	45	4	3	10	0.05	0.1
63	38	130	155	20	95	78	19	65	4	4	10	0.05	0.2
80	—	175	205	25	130	115	32	50	5	5	10	0.05	0.2
100	—	210	245	29	155	133	32	53	5	5	10	0.05	0.2

[1)] $d4_{max}$ only in combination with $t4_{max}$.

The 3-way servo proportional valve with VCD® technology series TPQ are used in applications where high flow has to be precisely controlled at maximum dynamics. Typical applications are die casting, injection moulding and hydraulic presses.



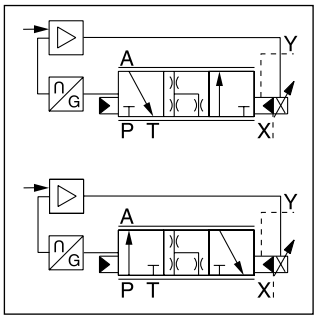

TPQ 040

Function

TPQ has a 2-stage design consisting of a DFplus pilot valve and a main stage with spool and LVDT.

With the DFplus pilot valve the TPQ achieves extremely fast response times: from 7 ms (NG25) up to 20 ms (NG80) with an accuracy of <0.1 % of the nominal flow. The pilot valve actively controls the spool – independent of the pressure conditions in the main ports.

It is basically required that the pilot pressure is at the level of the system pressure. At low system pressure the pilot pressure should be min. 140 bar, when high valve dynamics are desired.

The integrated electronics in the pilot of the TPQ has two control loops for the main cone and the pilot spool.

Features

- Active pilot operated 3-way servo proportional valve
- Cavity according to Parker house norm
- Fast step response
- Flow direction A to T and P to A
- Completely mounted adapted unit with integrated electronics
- In order to ensure the basic position, pilot pressure is required
- 6 sizes NG25 up to NG80

TPQ 040 P

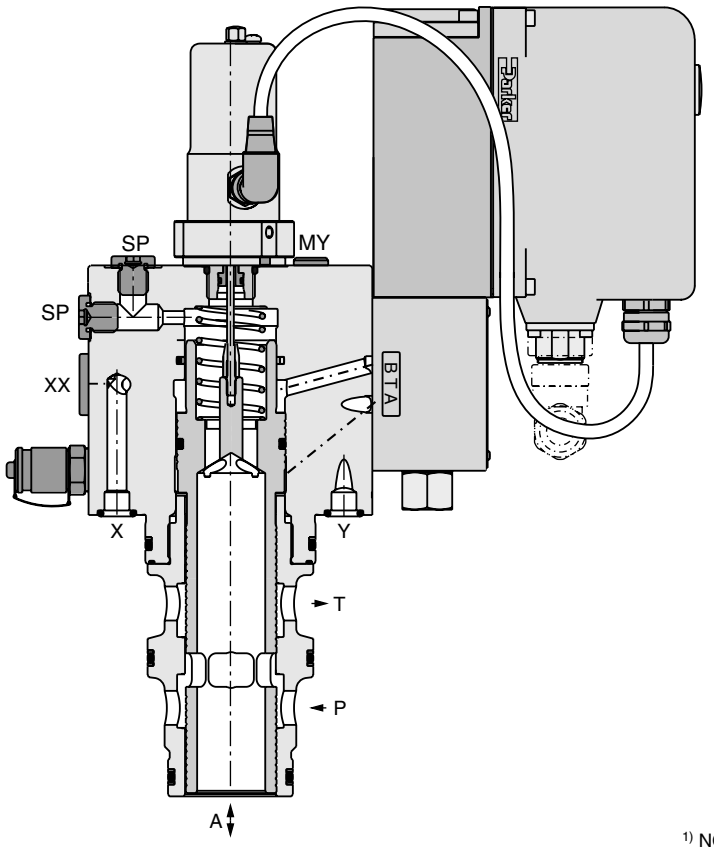

Basic position:

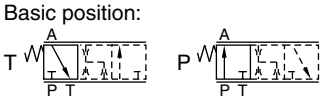

Zero position:

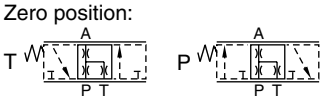

Function symbol
Basic position spool type P

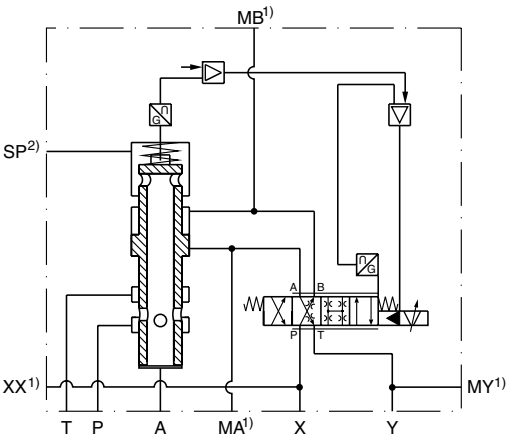

1) NG25 and NG32 without accu port XX and without port MA, MB and MY.

Ordering code

TPQ		W	H	2	5		2			0	
3-way servo proportional valve with LVDT	Nominal size	Parker Slip-in cartridge	Closed loop, VCD® performance, integrated electronics	Linear spool	Nominal flow	Spool type	Pilot oil supply external, drain external	Seal	Input signal	Standard electronics	Design series (not required for ordering)

Code	Nominal size
025	NG25
032	NG32
040	NG40
050	NG50
063	NG63
080	NG80

Code	Signal range
B	0...±10 V
E	0...±20 mA
S	4...+20 mA

Code	Seal
N	NBR
V	FPM
H	for HFC fluid

Zerolap		
Code	Spool type Input signal - 0 +	Basic position
P	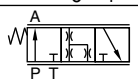	P → A
T	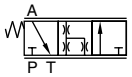	A → T

The DFplus pilot valve is also available with EtherCAT interface, see chapter 3, D*FP and D*1FP with EtherCAT.

Please order connector separately
Angle female connector must be used for NG25 to NG50.

Characteristic flow/signal line

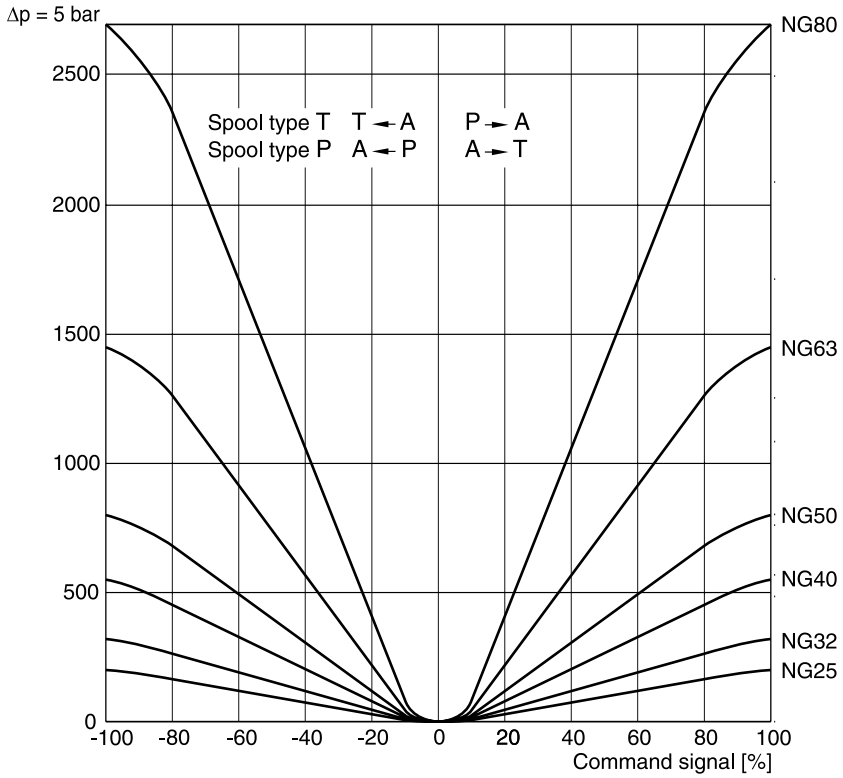

Flow at different Δp $Q_{actual} = Q_{nominal} \cdot \sqrt{\Delta p_{actual} / \Delta p_{nominal}}$

Characteristic curve measured with HLP46 at 50 °C.

General							
Design			Proportional throttle valve, slip-in cartridge				
Nominal size		DIN	**NG25**	**NG32**	**NG40**	**NG50**	**NG63**	**NG80**
Mounting position			unrestricted					
Ambient temperature		[°C]	-20...+50					
Weight		[kg]	11	13	15	26	52	105
Vibration resistance		[g]	10 sinus 5...2000 Hz acc. IEC 68-2-6 10 (RMS) random noise 20...2000 Hz acc. IEC 68-2-36 15 shock acc. IEC 68-2-27					
Hydraulic							
Max. operating pressure		[bar]	Ports A, P, T, X up to 350, XX [2] observe accumulator pressure rating; port Y: max. 35					
Fluid			Hydraulic oil according to DIN 51524					
Fluid temperature		[°C]	-20...+60 (NBR: -25...+60)					
Viscosity	recommended	[cSt]/[mm²/s]	30...80					
	permitted	[cSt]/[mm²/s]	20...400					
Filtration			ISO 4406; 18/16/13					
Nominal flow at Δp = 5 bar		[l/min]	200	320	550	800	1450	2700
Recommended max. flow		[l/min]	500	1000	1600	2250	3500	6500
Nominal overlap		[%]	< 1.5					
Flow direction			A to T or P to A					
Pilot pressure		[bar]	must be as high as system pressure					
Pilot oil	supply		external via X					
	drain		external via Y					
Leakage in pilot valve at 100 bar		[ml/min]	< 400					
Leakage in main stage at 100 bar		[l/min]	NG32 to 63 < 2.5; NG80 < 4.0					
Pilot valve size			**NG06**				**NG10**	
Max. pilot flow at 140 bar pilot press.		[l/min]	25	25	25	25	50	60
Static/dynamic							
Step response at pilot press. >140 bar		[ms]	7	11	11	18	19	20
Frequency response at pilot press. >140 bar								
	Amplitude -3 dB; ±5 %	[Hz]	210	105	70	45	35	30
	Phase -90°; ±5 %	[Hz]	170	125	110	95	75	70
Hysteresis		[%]	< 0.1					
Sensitivity		[%]	< 0.05					
Temperature drift of center position		[%/K]	< 0.025					
Electrical							
Duty ratio		[%]	100					
Protection class			IP65 in accordance with EN 60529 (with correctly mounted plug-in connector)					
Supply voltage / ripple		[V]	DC 22 ... 30, electric shut-off at < 19, ripple < 5 % eff., surge free					
Current consumption max.		[A]	3.5					
Pre-fusing		[A]	4.0 A medium lag					
Input signal	Code B Voltage	[V]	+10...0...-10, ripple < 0.01 % eff., surge free					
	Impedance	[kOhm]	100					
	Code E Current	[mA]	+20...0...-20, ripple < 0.01 % eff., surge free					
	Impedance	[Ohm]	< 250					
	Code S Current	[mA]	4...12...20, ripple < 0.01 % eff., surge free < 3.6 mA = disable, > 3.8 mA = enble on according to NAMUR NE43					
	Impedance	[Ohm]	< 250					
Differential input max.		[V]	30 for terminal D and E against PE (terminal G),					
		[V]	11 for terminal D and E against 0V (terminal B)					
Enable signal		[V]	5...30, Ri = > 8 kOhm					
Diagnostic signal		[V]	+10...0...-10 / +12.5 error detection, rated max. 5 mA					
EMC			EN 61000-6-2, EN 61000-6-4					
Electrical connection			6 + PE acc. EN 175201-804					
Wiring min.		[mm²]	7x1.0 (AWG16) overall braid shield					
Wiring length		[m]	50					

[1] If valves with onboard electronics are used in safety-related parts of control systems, in case the safety function is requested, the valve electronics voltage supply is to be switched off by a suitable switching element with sufficient reliability.

[2] Accu port XX: Please contact Parker for installation recommendation.

Block circuit diagram electronics

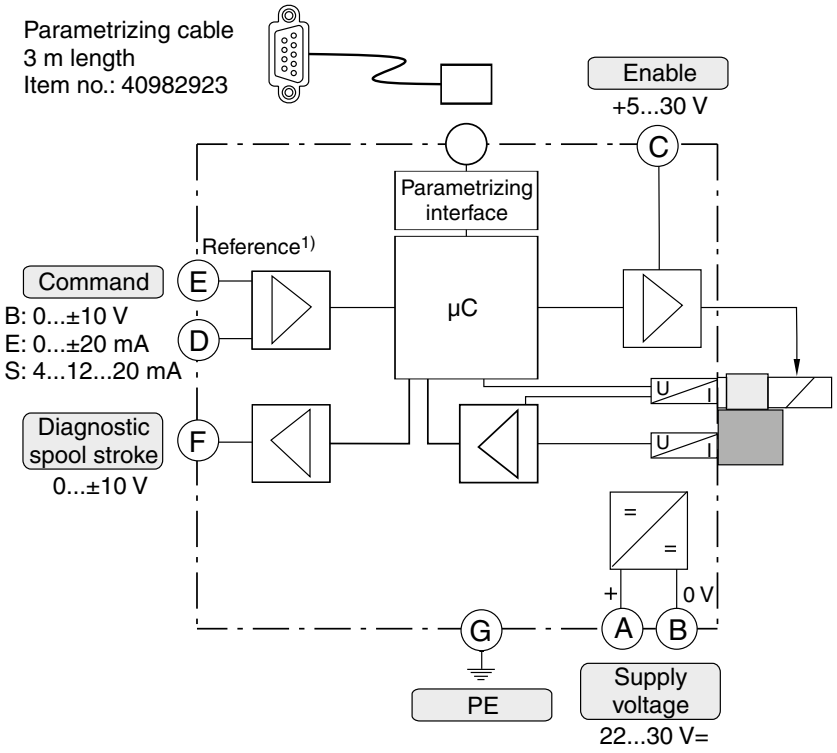

Connection diagrams electronics

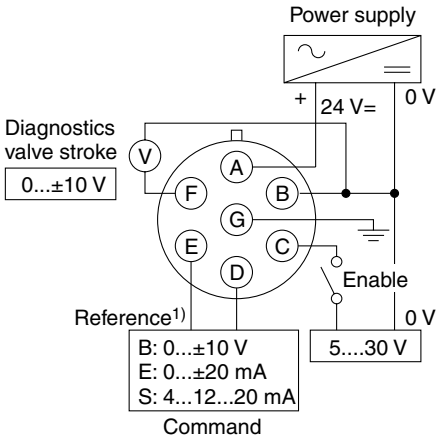

Female connector for NG63 to NG80
(EMC conform)

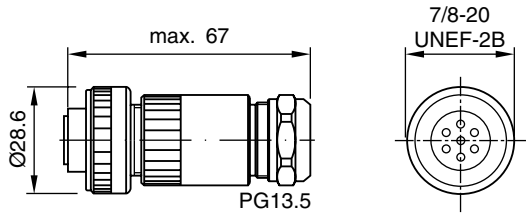

ID no. 5004072

Angle female connector for NG25 to NG50
(EMC conform)

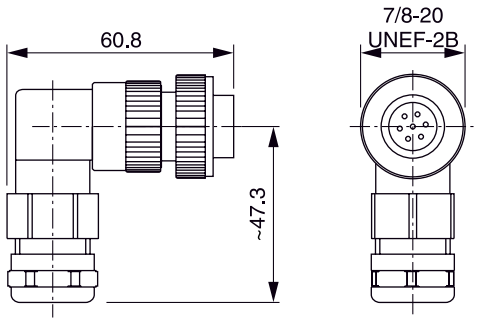

ID no. 5005160

Please order plugs separately.

1) Do not connect with the supply voltage zero.

TPQ UK.INDD 25.04.19

NG25

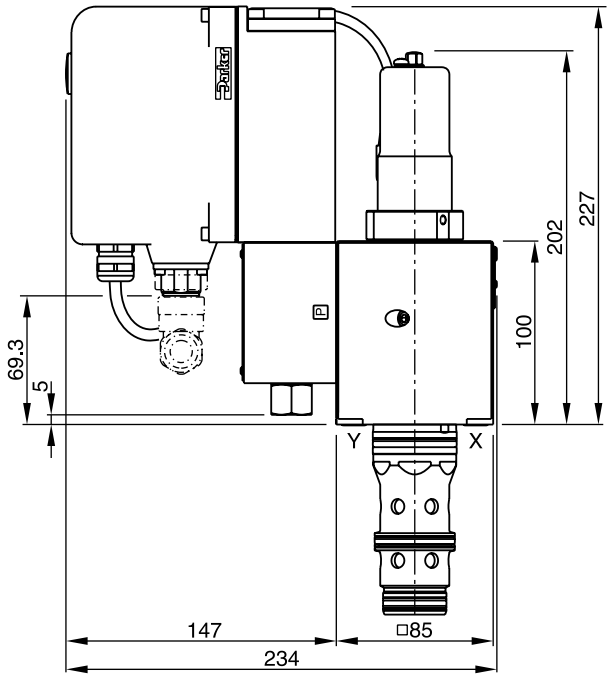

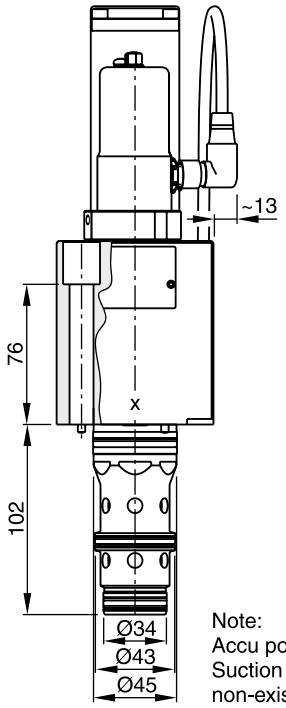

Note:
Accu port XX and
Suction port SP
non-existent

NG32

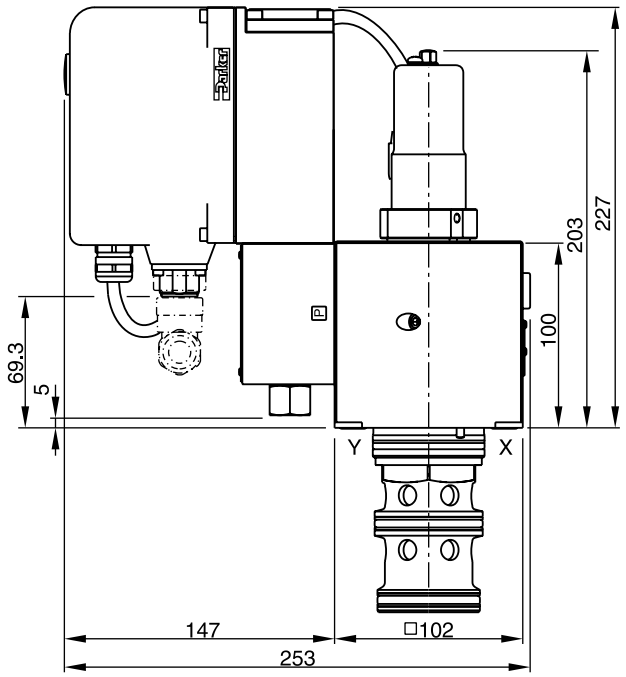

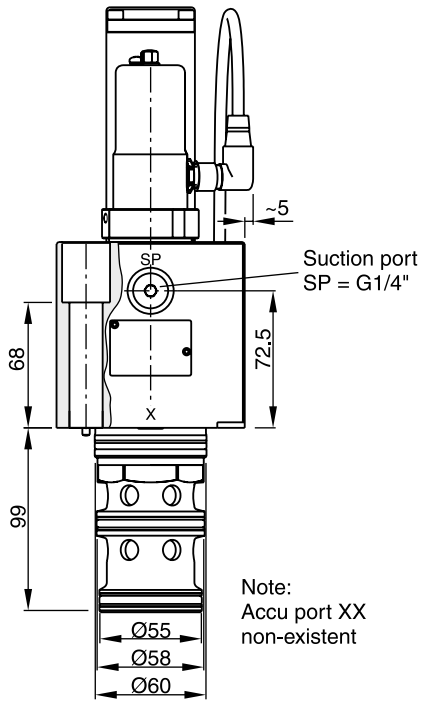

Note:
Accu port XX
non-existent

NG	Bolt kit -		Kit NBR	Kit FPM
25	BK504 4x M12x100 ISO 4762-12.9	108 Nm	SK-TPQ025EN30	SK-TPQ025EV30
32	BK529 4x M16x100 ISO 4762-12.9	264 Nm	SK-TPQ032EN30	SK-TPQ032EV30

NG40

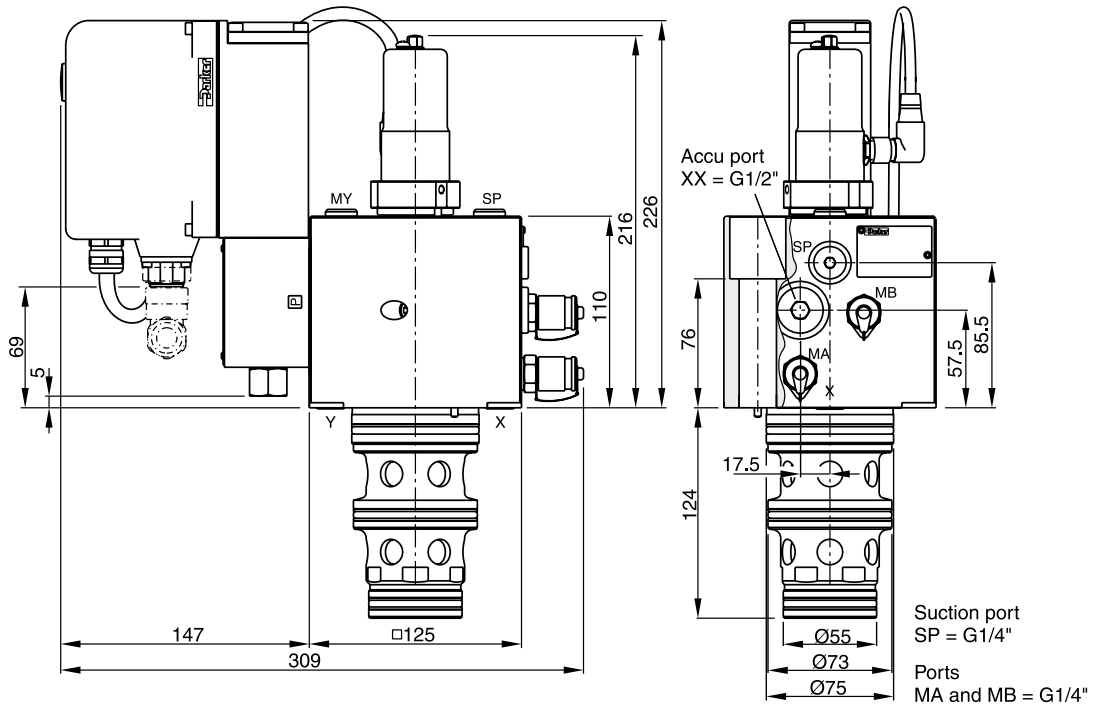

NG50

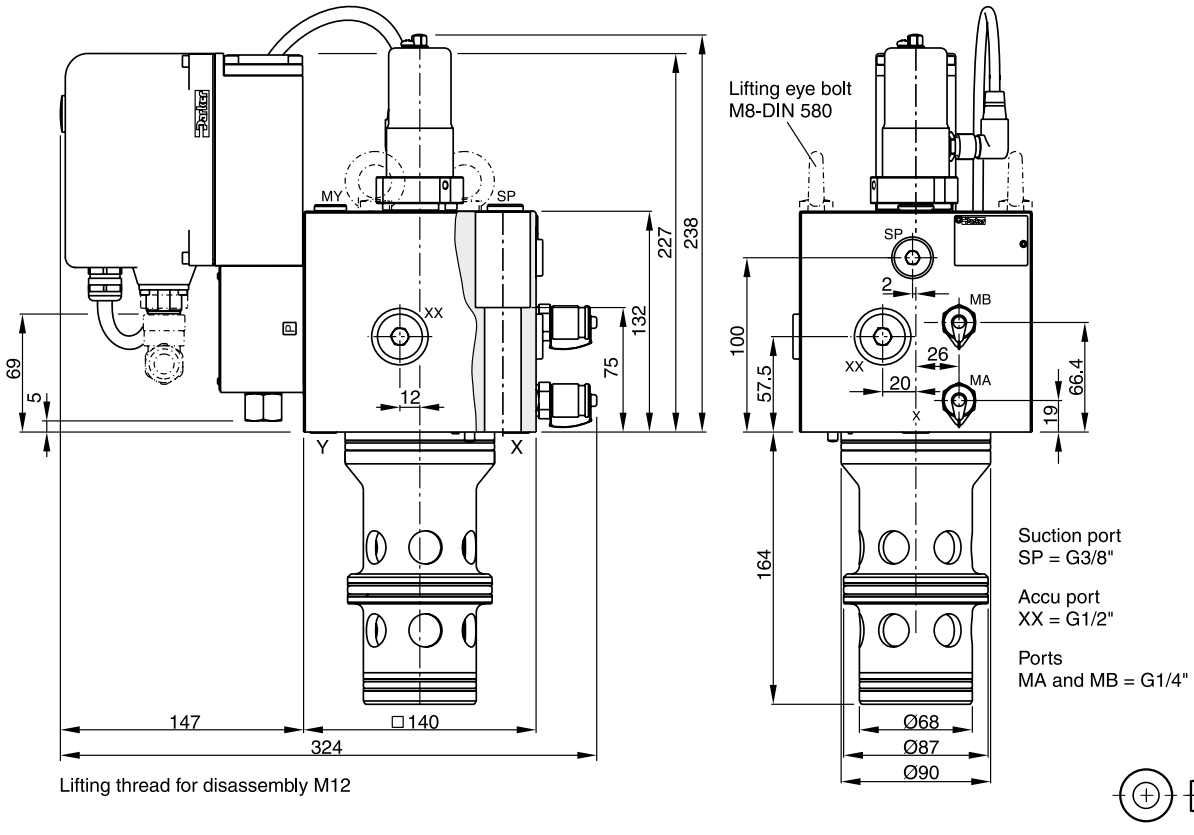

NG	Bolt kit -		Kit NBR	Kit FPM
40	BK481 4 x M20x110 ISO 4762-12.9	517 Nm	SK-TPQ040EN30	SK-TPQ040EV30
50	BK481 4 x M20x110 ISO 4762-12.9	517 Nm	SK-TPQ050EN30	SK-TPQ050EV30

TPQ UK.INDD 25.04.19

NG63

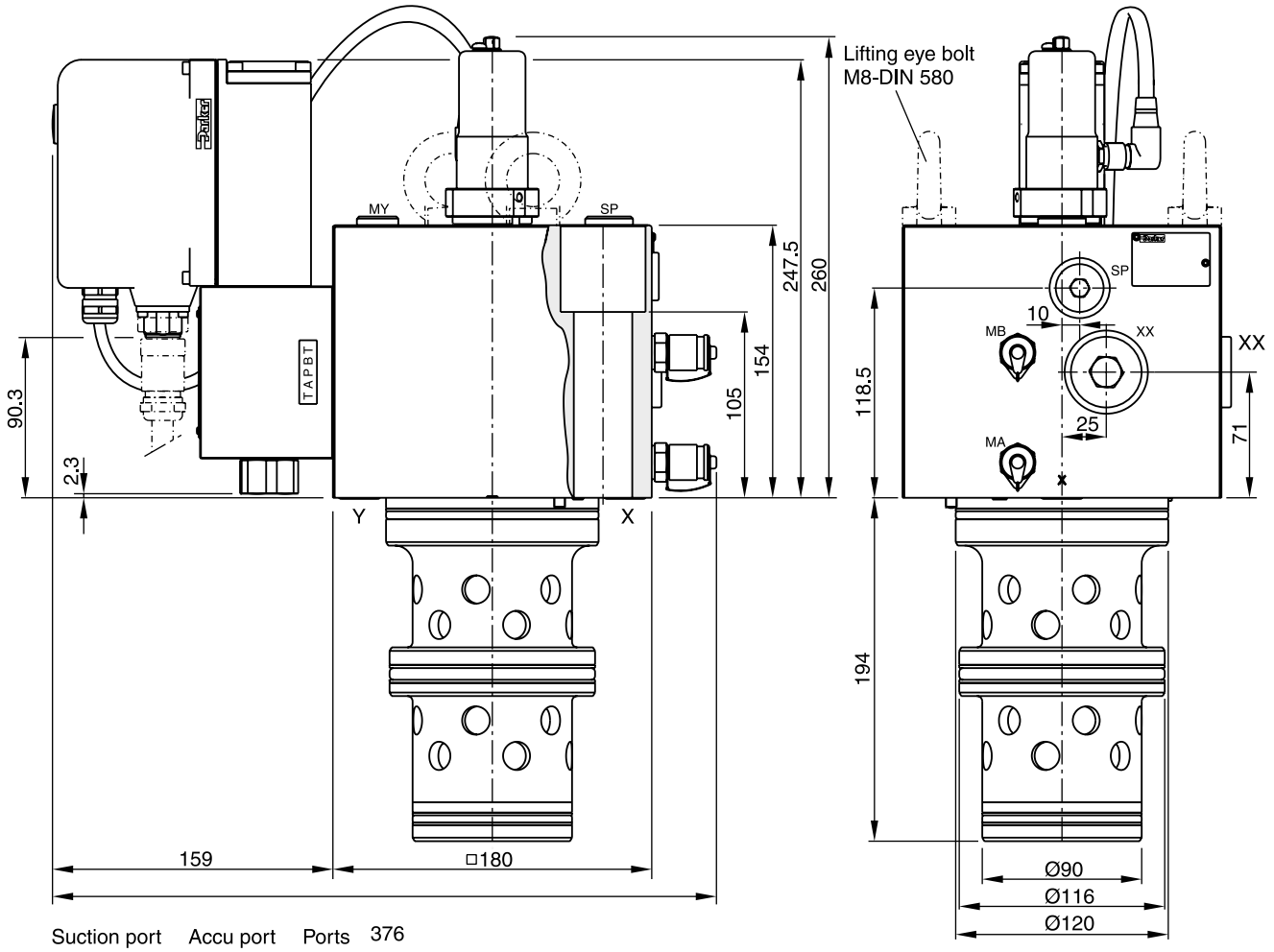

Suction port SP = G1/2" Accu port XX = G3/4" Ports MA and MB = G1/4" 376

Lifting thread for disassembly M12

NG	Bolt kit -		Kit NBR	Kit FPM
63	BK518 4x M30x160 ISO 4762-12.9	1775 Nm	SK-TPQ063EN30	SK-TPQ063EV30

NG80

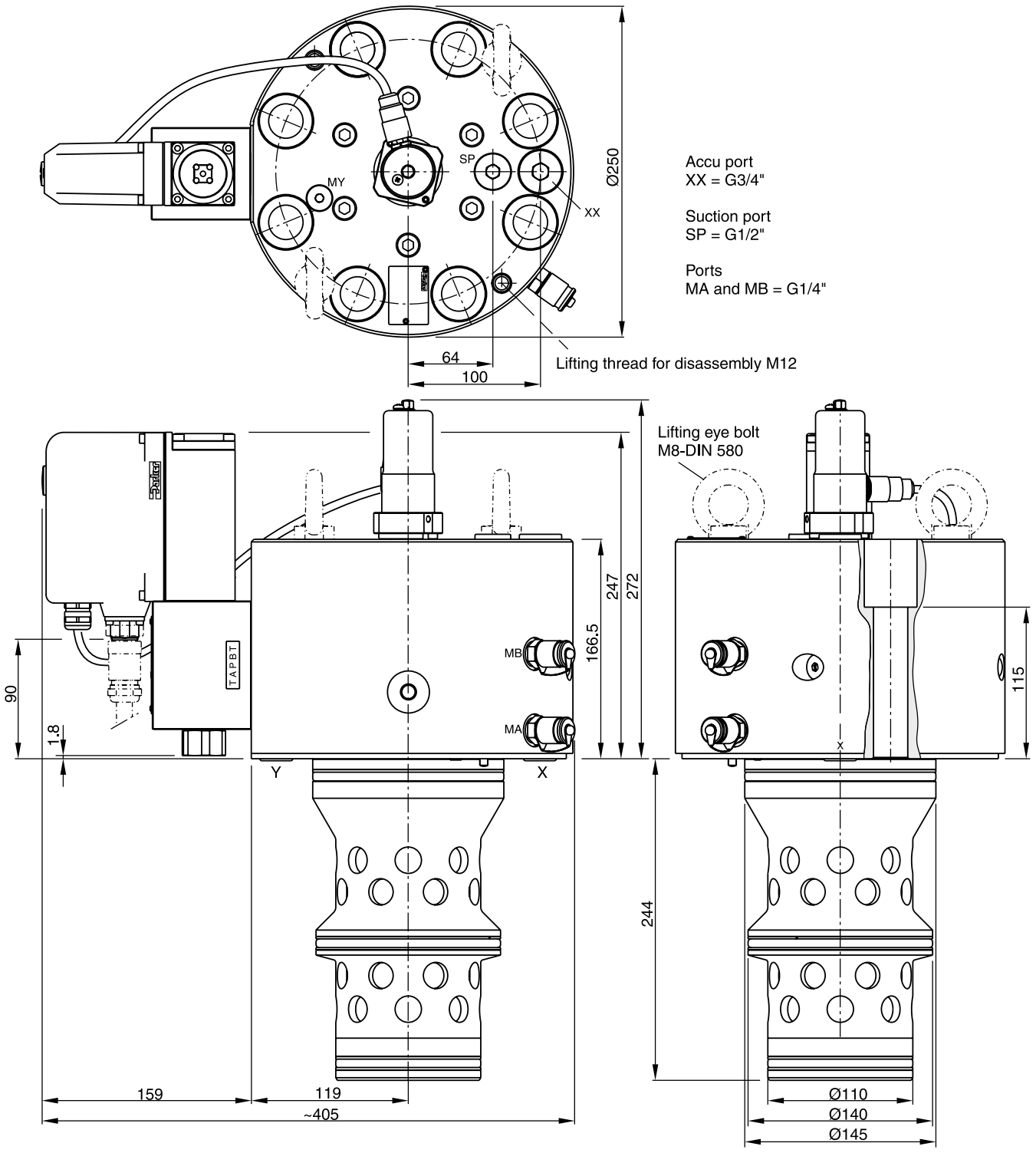

NG	Bolt kit -		Kit NBR	Kit FPM
80	BK530 8x M24x160 ISO 4762-12.9	890 Nm	SK-TPQ080EN30	SK-TPQ080EV30

TPQ UK.INDD 25.04.19

NG32 to NG63

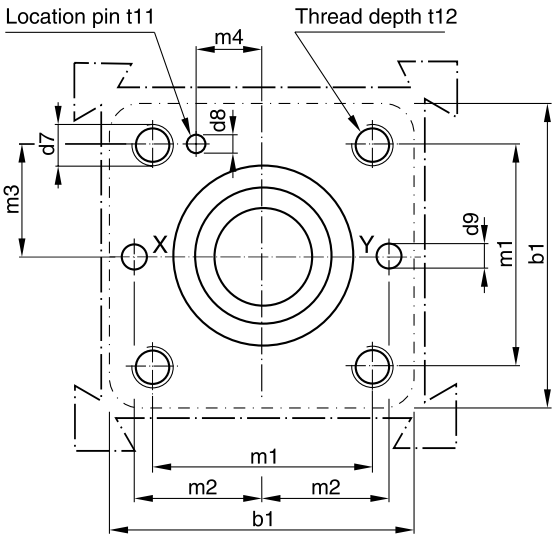

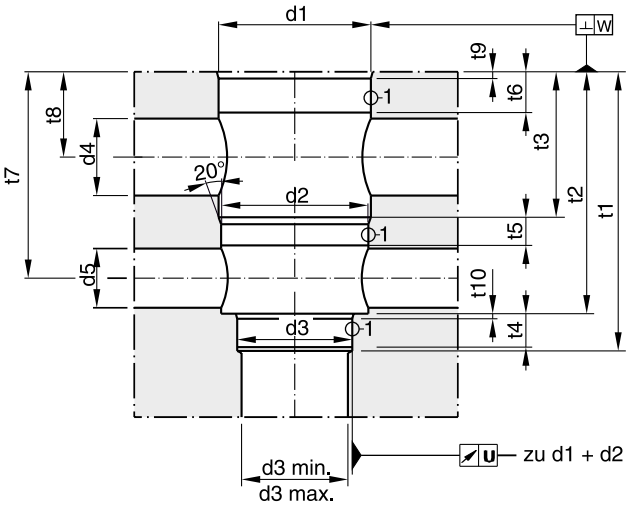

NG80

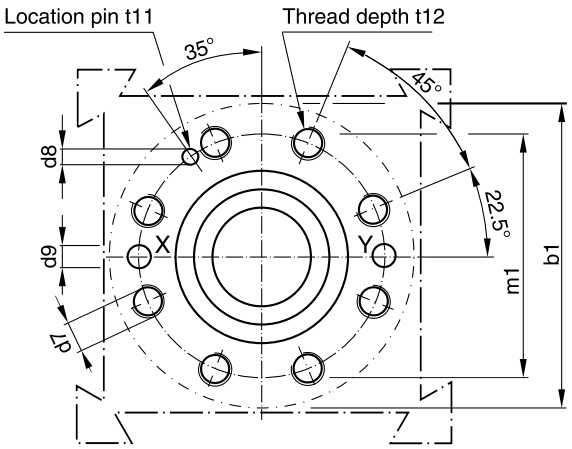

Required surface finish:

$\sqrt{R_{max}25}$, (1) = $\sqrt{R_{max}8}$

Size	b1	d1 H7	d2 H7	d3 H7	d3 min.	d3 max.	d4 max.	d5 max.	d7	d8 H13	d9	U	W
25	85	45	43	34	17	25	25	21	M 12	4	7.5	0.03	0.05
32	102	60	58	55	32	54	28	28	M 16	6	8	0.03	0.1
40	125	75	73	55	40	54	38	32	M 20	6	10	0.05	0.1
50	140	90	87	68	50	67	63	38	M 20	8	10	0.05	0.1
63	180	120	116	90	63	89	64	52	M 30	8	12	0.05	0.2
80	250	145	140	110	80	109	70	66	M 24	10	16	0.05	0.2

Size	m1 ±0.2	m2 ±0.2	m3 ±0.2	m4 ±0.2	t1 $^{+3}_{+1}$	t2 ±0.2	t3 ±0.2	t4	t5	t6	t7 ±0.2	t8 ±0.2	t9	t10	t11	t12
25	58	33	29	16	103	89 $^{+0.3}$	56	11.5	15	17	78	43.5	2.5x15°	2.5x15°	10	35
32	70	41	35	17	100	85	43	13.5	16	18	71	28.5	2.5x15°	2.5x15°	10	35
40	85	50	42.5	23	125	105	54	15	18	21	88	34	3x15°	3x15°	10	45
50	100	58	50	30	165	143	84.5	18	18	21	122	51.5	4x15°	3x15°	10	45
63	125	75	62.5	38	195	165	83.5	25	29.5	33	138.5	50	4x15°	4x15°	10	65
80	200	–	–	–	245	215	123	25	27	60	181	87	5x15°	5x15°	10	50

Series	Description	Size				Mounting		Configuration		Page
	DIN / ISO	¾	1	1¼	1½	SAE61	SAE62	2-port	3-port	
	Pressure valves, manual operation									
R5V	Pressure relief function	•	•	•	•	•	•	•	•	9-2
R5U	Pressure unloading function	•	•	•	•	•			•	9-8
R5S	Pressure sequence function	•	•	•		•			•	9-13
R5R	Pressure reducing function	•	•	•		•		•		9-17
	Pressure valves, proportional operation									
R5V*P2	Pressure relief function	•	•	•	•	•	•	•	•	9-23
R5R*P2	Pressure reducing function	•	•	•		•		•		9-29
	Directional seat valves									
D5S		•	•	•	•	•		•	•	9-33
	Flow valves									
F5C	Throttle valves, proportional	•	•	•		•		•		9-47
R5A	2-way pressure compensator	•	•	•		•		•		9-51
R5P	3-way pressure compensator	•	•	•		•			•	9-53
	Check valves									
C5V	Direct operated	•	•	•	•	•	•	•		9-60
C5P	Pilot operated	•	•	•		•		•		9-64
	Accessories									
	Bolt kits, flanges, plugs									9-68

Pilot operated pressure relief valves series R5V have a similar design to the subplate mounted R4V series. The SAE flanges allow to mount the valves directly on the outlet flanges of pumps or inlet flanges of actuators to achieve a very compact design.

Valves with SAE flanges can also be bolted together to combine functions without the need of a manifold block.

Features

- Pilot operated with manual adjustment
- R5V with 2-port body
  - 3 sizes (SAE ¾", 1", 1¼")
  - SAE61 flange
- R5V with 3-port body
  - 4 sizes (SAE ¾", 1", 1¼", 1½")
  - SAE61 and SAE62 flange
- 3 pressure stages
- 3 adjustment modes
  - Hand knob
  - Acorn nut with lead seal
  - Cylinder lock
- With optional vent function



R5V 2-port



R5V 3-port

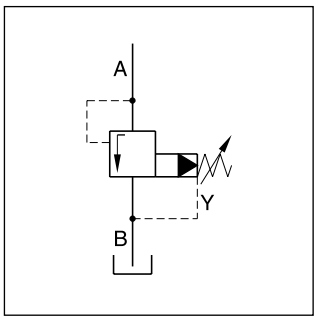

R5V 2-port

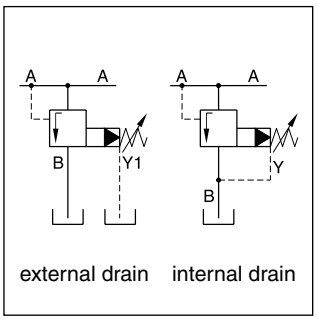

R5V 3-port

R5V 2-port

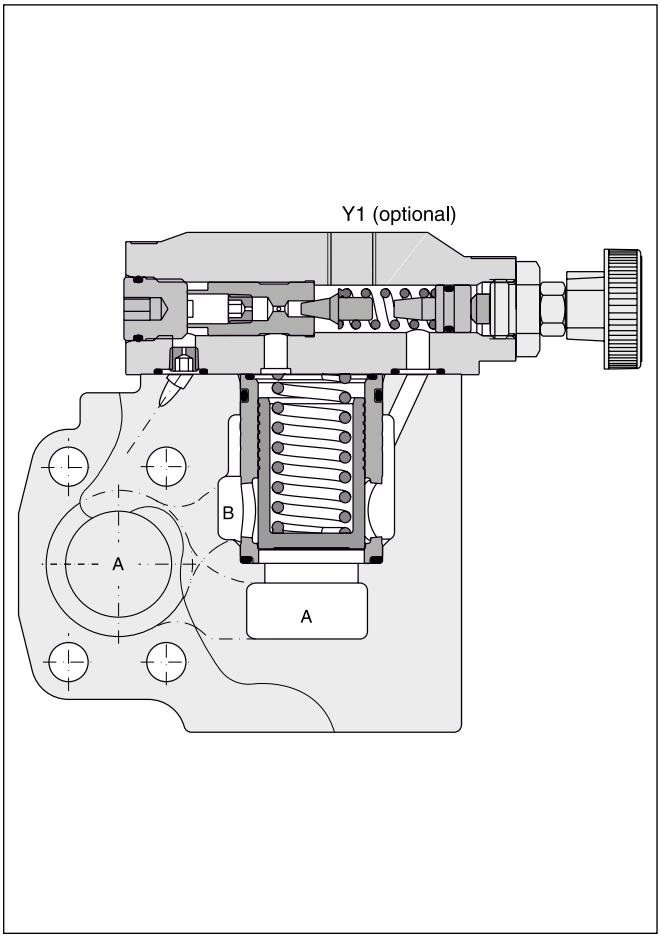

R5V 3-port

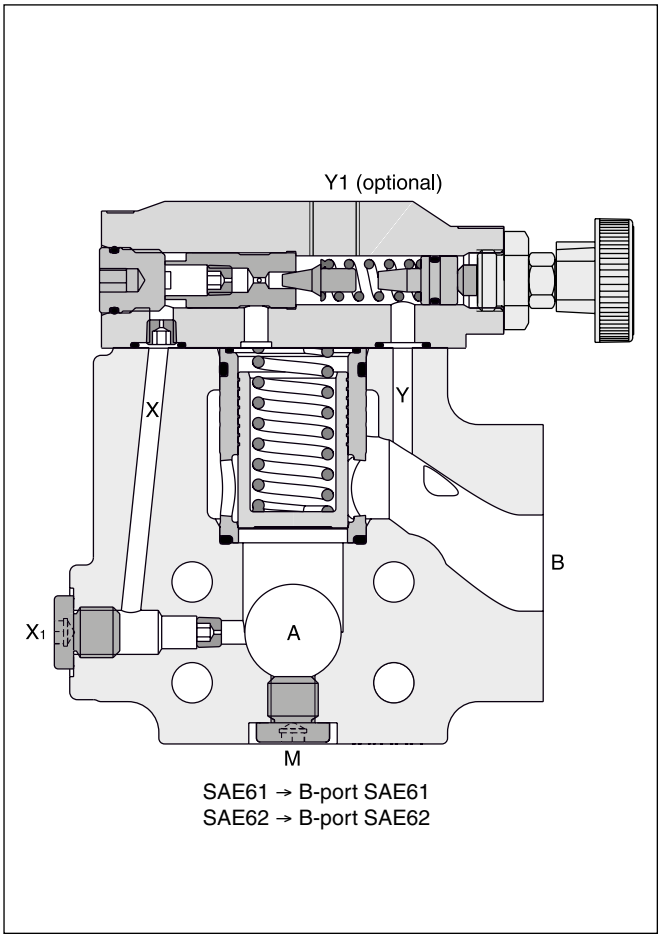

SAE61 → B-port SAE61
SAE62 → B-port SAE62

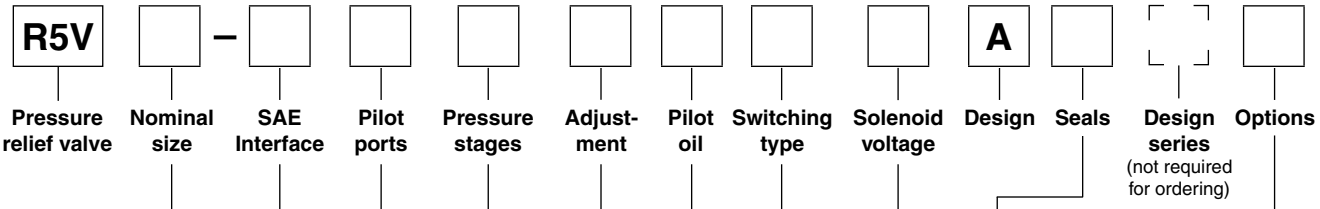

Code	Port size
06	SAE ¾"
08	SAE 1"
10	SAE 1¼"
12 [1]	SAE 1½"

SAE61		
Code	Size	Max. pressure [bar]
3	12	210
4	10	280
5	06/08	350
SAE62		
Code	Size	Max. pressure [bar]
6 [1]	06/08/10/12	350

2-port body	
Code	pilot ports
7	Y1 = G ¼" [2]
3-port body	
Code	pilot ports
9	Y1 [2], X1, M = G ¼"

Code	Pressure stages
1	up to 105 bar
3	up to 210 bar
5 [3]	up to 350 bar

Code	Adjustment
1	Hand knob
3	Acorn nut with lead seal
4	Cylinder lock

Pilot oil	
Code	Drain line
2	internal
6	external from Y1-port

Code	Switching type
omit	Standard w/o vent function
09	Solenoid not activated, unpress. circulation
11	Solenoid activated unpress. circulation

Code	Solenoid voltage
omit	Standard w/o vent function
G0R	12 V=
G0Q	24 V=
GAR [4]	98 V=
GAG [4]	205 V=
W30	110 V / 50 Hz 120 V / 60 Hz
W31	230 V / 50 Hz 240 V / 60 Hz

Code	Seals
1	NBR
5	FPM

Code	Options
008 [5]	Vent function with slow unloading
070	Metric 3-port body for R5V10 SAE62: Pressure ports (A): SAE62 with 15 mm through holes (for M14), Tank port: SAE61 (M12)
152 [6]	3-port body with metric threads

Further options on request

[1] Only R5V 3-port.
[2] Y1 only available at external drain (pilot oil code 6).
[3] R5V10-4*5 up to 280 bar.
[4] To be used in combination with rectifier plugs at 120 VAC / 230 VAC power supply.
[5] Only for vent valve function code 09.
[6] R5V08 SAE62: Tank port SAE61 (M10).

Technical data

General							
Size			**06 (¾")**	**08 (1")**	**10 (1¼")**	**12 (1½")**	
Mounting			Flanged according to SAE61 and SAE62				
Mounting position			unrestricted				
Ambient temperature		[°C]	-20...+60				
$MTTF_D$ value		[years]	75				
Weight	R5V 2-port	[kg]	4.0	4.6	5.9	—	
	R5V 3-port	[kg]	3.6	4.6	5.2	8.0	
Hydraulic							
Max. operating pressure		[bar]					
	SAE61 Ports A, B		350	350	280	210	
	Port Y1		30	30	30	30	
	SAE62 Ports A, B		350	350	350	350	
	Port Y1		30	30	30	30	
Pressure stages		[bar]	105, 210, 350				
Nominal flow		[l/min]	90	300	600	600	
Fluid			Hydraulic oil according to DIN 51524				
Fluid temperature		[°C]	-20...+70 (NBR: -25...+70)				
Viscosity,	permitted	[cSt] / [mm^2/s]	20 ... 400				
	recommended	[cSt] / [mm^2/s]	30...80				
Filtration			ISO 4406 (1999); 18/16/13				
Electrical (solenoid)							
Duty ratio			100 % ED; CAUTION: coil temperature up to 150 °C possible				
Protection class			IP65 in accordance with EN 60529 (with correctly mounted plug-in connector)				
		Code	G0R	G0Q	GAR	GAG	W30	W31
Supply voltage		[V] [V]	12 V =	24 V =	98 V =	205 V =	110 at 50 Hz 120 at 60 Hz	230 at 50 Hz 240 at 60 Hz
Tolerance supply voltage		[%]	±10	±10	±10	±10	±5	±5
Current consumption	hold	[A]	2.72	1.29	0.33	0.13	0.6 / 0.55	0.3 / 0.27
	in rush	[A]	2.72	1.29	0.33	0.13	2.5 / 2.4	1.25 / 1.2
Power consumption	hold	[W]	32.7	31	31.9	28.2	70/70 VA	70/70 VA
	in rush	[W]	32.7	31	31.9	28.2	280/290 VA	280/290 VA
Solenoid connection			Connector as per EN175301-803, solenoid identification as per ISO 9461					
Wiring min.		[mm^2]	3 x 1.5 recommended					
Wiring length max.		[m]	50 recommended					

9

p/Q performance curve

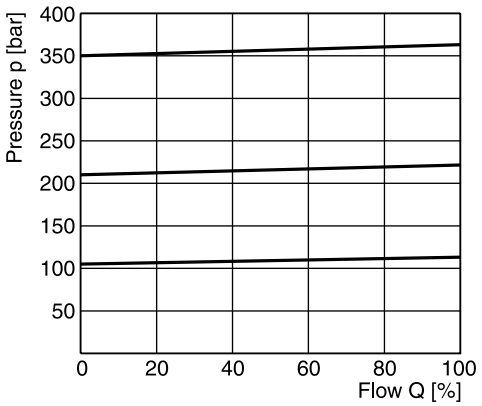

Minimum pressure curve

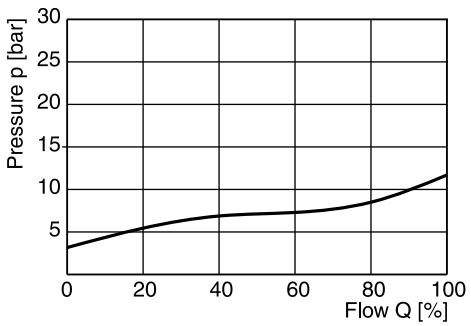

All characteristic curves measured with HLP46 at 50 °C.

The performance curves are measured with external drain.
For internal drain the tank pressure has to be added to curve.

Dimensions R5V 2-port

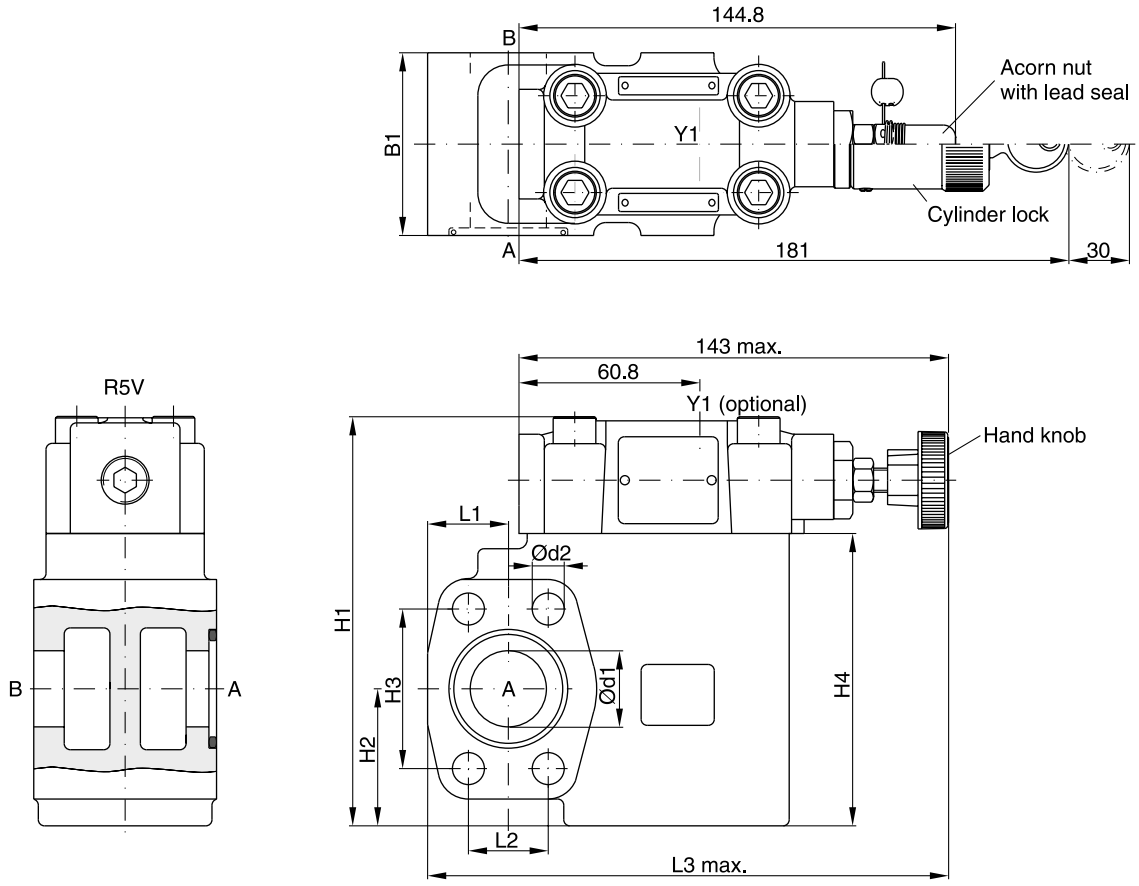

SAE61

Seal kits		
NG	**NBR**	**FPM**
06	S16-91850-0	S16-91850-5
08	S16-91851-0	S16-91851-5
10	S16-91852-0	S16-91852-5

NG	B1	H1	H2	H3	H4	L1	L2	L3	d1	d2
06	60	131.6	37	47.6	90	24.6	22.2	152	19	10.5
08	60	137.6	45	52.4	96	26.5	26.2	171	25	10.5
10	75	150.6	48	58.7	109	34.0	30.2	179	32	12.5

Port	Function	Port size		
		R5V06	**R5V08**	**R5V10**
A	Pressure	¾" SAE61	1" SAE61	1¼" SAE61
B	Tank	¾" SAE61	1" SAE61	1¼" SAE61
Y1	External drain	G¼"	G¼"	G¼"

Dimensions R5V 3-port

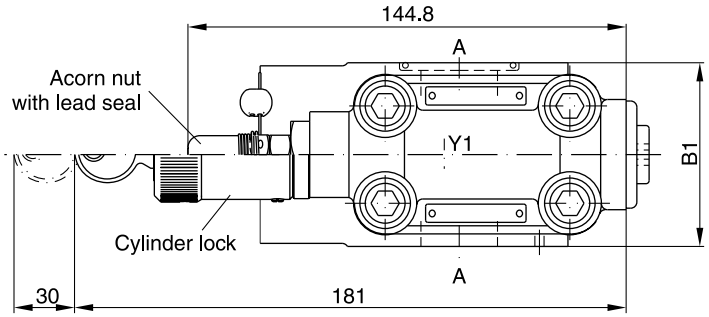

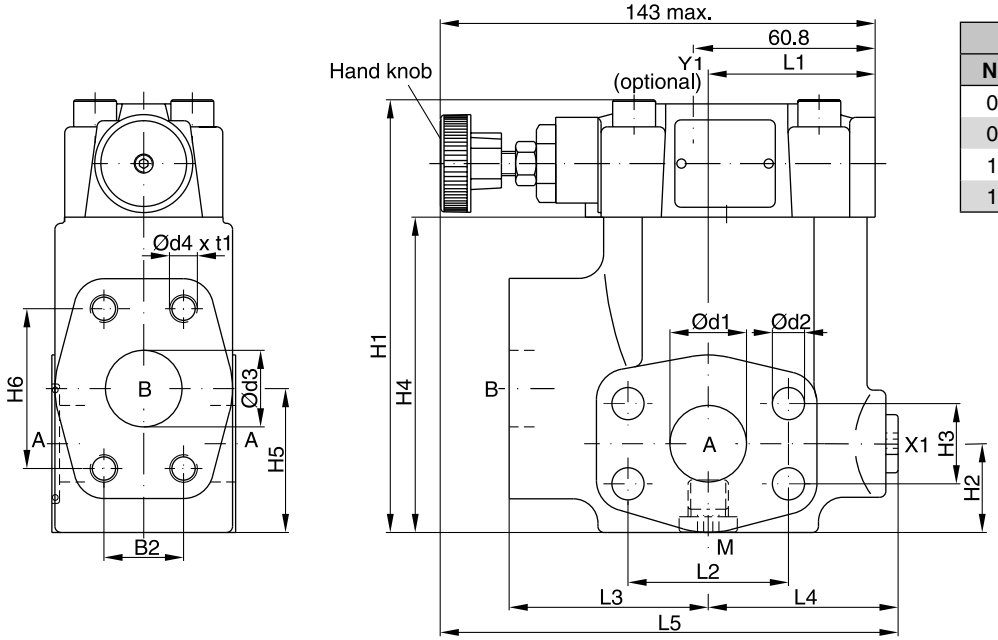

Seal kits		
NG	**NBR**	**FPM**
06	S16-91850-0	S16-91850-5
08	S16-91851-0	S16-91851-5
10	S16-91852-0	S16-91852-5
12	S26-27421-0	S26-27421-5

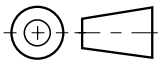

9

SAE61

NG	B1	B2	H1	H2	H3	H4	H5	H6	L1	L2	L3	L4	L5	d1	d2	d3	d4 (option 152)	t1
06	60	22.2	119	29.5	22.2	81	41	47.6	50.3	47.6	63	60	152	19	10.5	19	3/8”-16 UNC (M10)	20
08	60	26.2	141	30.5	26.2	103	47	52.4	55.8	52.4	65	62	149	25	10.5	25	3/8”-16 UNC (M10)	23
10	75	30.2	151	37.5	30.2	113	65	58.7	57.8	58.7	61	68	150.5	32	12.5	30	7/16”-14 UNC (M12)	22
12	80	35.7	178	72	35.7	140	73	69.8	37.3	69.8	92.5	59.2	171.2	38	13.5	38	1/2”-13 UNC (M12)	27

SAE62

NG	B1	B2	H1	H2	H3	H4	H5	H6	L1	L2	L3	L4	L5	d1	d2	d3	d4 (option 152)	t1
06	60	23.8	119	29.5	23.8	81	41	50.8	50.3	50.8	63	60	152	19	10.5	19	3/8”-16 UNC (M10)	20
08	60	27.8	141	30.5	27.8	103	47	57.2	55.8	57.2	65	62	149	25	12.5	25	7/16”-14 UNC (M10)[1]	22
10	75	31.8	151	37.5	31.8	113	65	66.7	57.8	66.7	61	68	150.5	32	13.5	30	1/2”-13 UNC (M12)	24
12	80	36.5	178	72	36.5	140	73	79.4	37.3	79.4	92.5	59.2	171.2	38	17	38	5/8”-11 UNC (M16)	33

Port	Function	Port size			
		R5V06	R5V08	R5V10	R5V12
A (2)	Pressure	¾" SAE61/62	1" SAE61/62	1¼" SAE61/62	1½" SAE61/62
B	Tank	¾" SAE61/62	1" SAE61/62	1¼" SAE61/62	1½" SAE61/62
X1	External pilot port [2]	G¼"	G¼"	G¼"	G¼"
Y1	External drain	G¼"	G¼"	G¼"	G¼"
M	Pressure gauge	G¼"	G¼"	G¼"	G¼"

[1] T-port SAE61.
[2] Closed when supplied.

R5V UK.INDD 11.04.19

Dimensions R5V with vent function

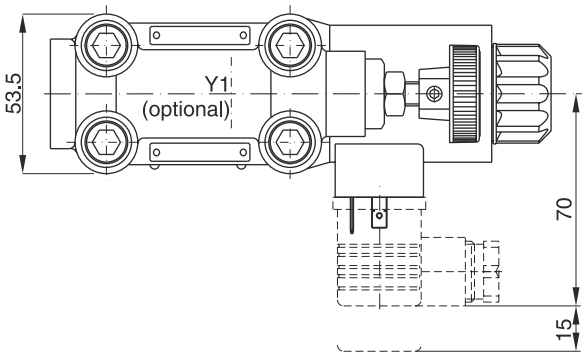

Seal kits	
NBR	**FPM**
DC solenoid	
S56-40609-0	S56-40609-5
AC solenoid	
S26-35237-0	S26-35237-5

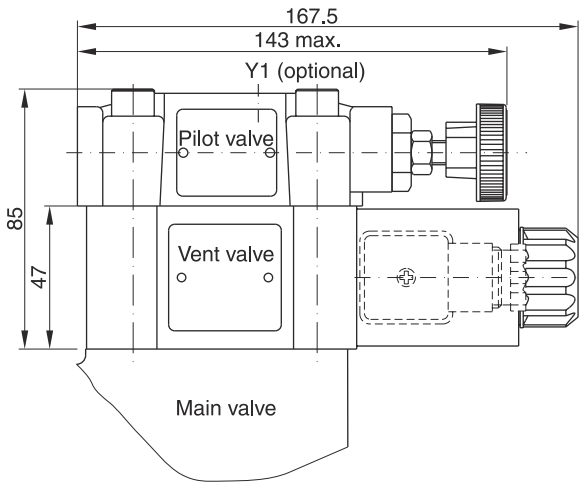

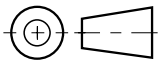

9

	R5V 2-port		R5V 3-port	
Code	**Internal drain**	**External drain**	**Internal drain**	**External drain**
11	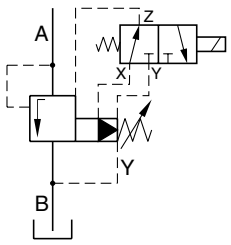	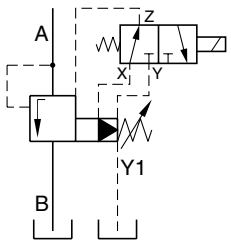	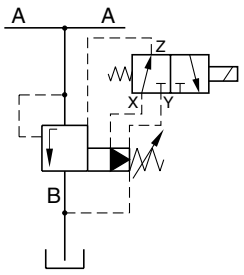	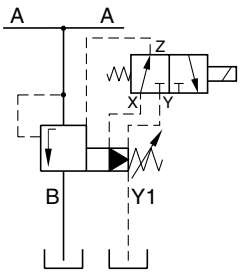
09	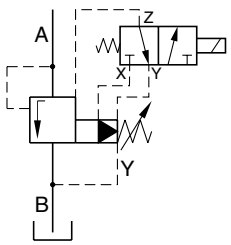	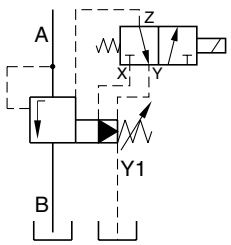	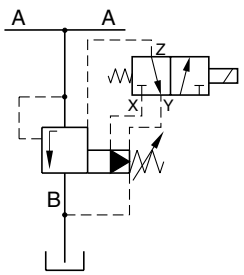	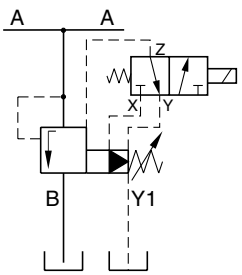

Pilot operated pressure unloading valves series R5U have a similar design to the subplate mounted R4U series. The SAE flanges allow to mount the valve directly on the outlet flanges of pumps.

A typical application is the unloading of a pump in an accumulator circuit. The combination of an R5U, C5V and R5V on a double pump generates a high pressure / low pressure pump system without the need of a manifold block or piping between the valves.

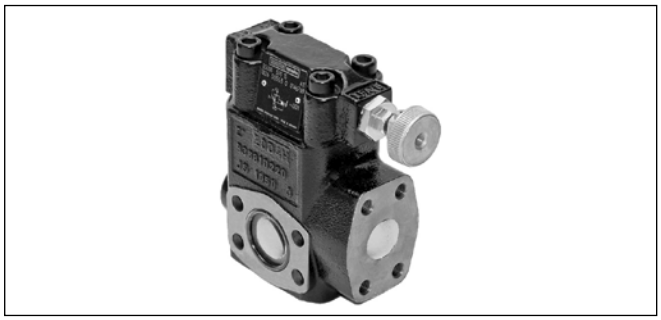

Features

- Pilot operated unloading valve
- 3-port body with SAE61 flange
- 4 sizes (SAE ¾", 1", 1¼", 1½")
- 3 pressure stages
- 3 adjustment modes
  - Hand knob
  - Acorn nut with lead seal
  - Cylinder lock
- With optional vent function

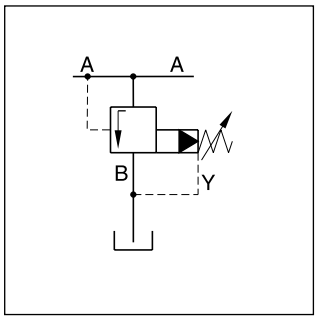

R5U 3-port internal drain

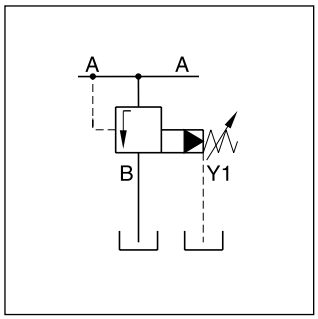

R5U 3-port external drain

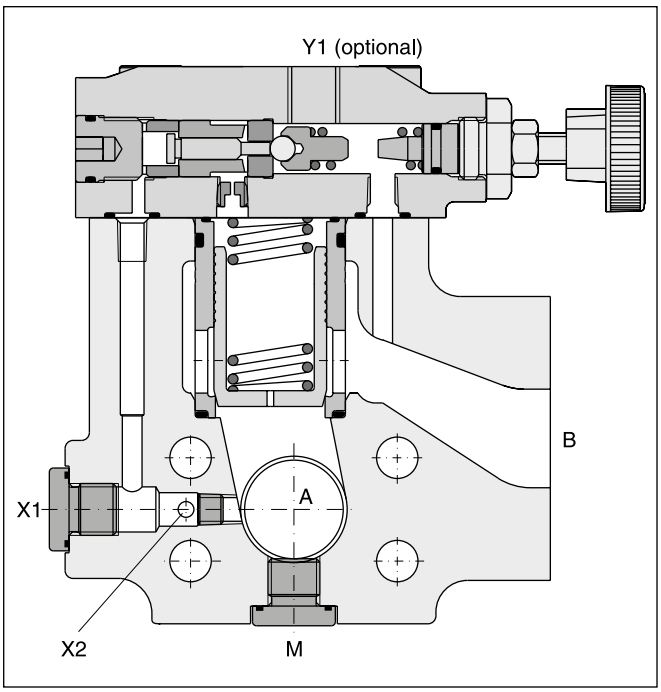

High pressure / low pressure system

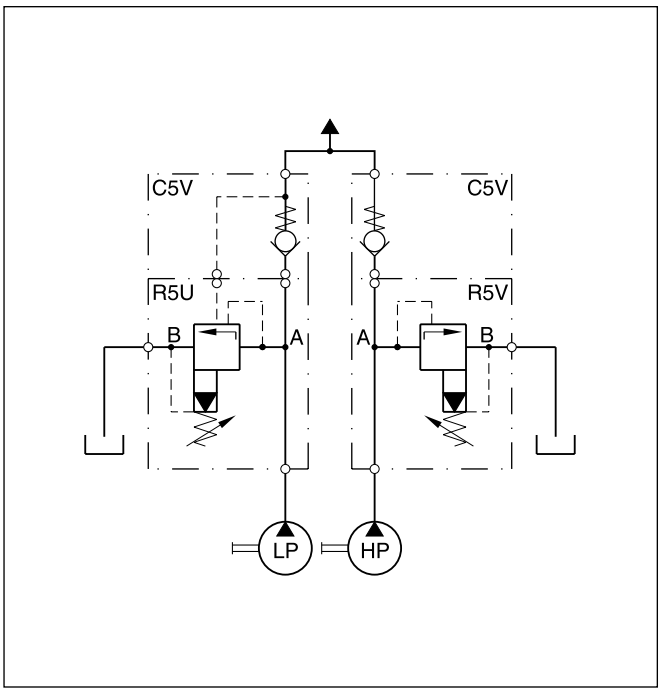

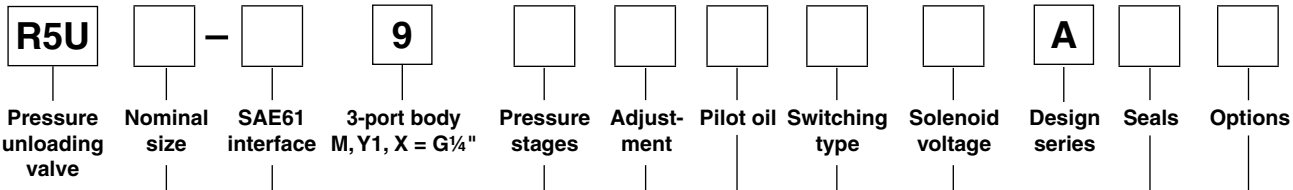

Code	Port size
06	SAE ¾"
08	SAE 1"
10	SAE 1¼"
12	SAE 1½"

SAE61		
Code	Size	Max. pressure [bar]
3	12	210
4	10	280
5	06/08	350

Code	Pressure stages [bar]	Pressure differential
1	up to 105	28 %
3	up to 210	28 %
5 [1]	up to 350	15 %

Code	Adjustment
1	Hand knob
3	Acorn nut with lead seal
4	Cylinder lock

Code	Options
008 [3]	Vent function with slow unloading
152	3-port body with metric threads

Code	Seals
1	NBR
5	FPM

Code	Solenoid voltage
omit	Standard w/o vent function
G0R	12 V=
G0Q	24 V=
GAR [2]	98 V=
GAG [2]	205 V=
W30	110 V / 50 Hz 120 V / 60 Hz
W31	230 V / 50 Hz 240 V / 60 Hz

Code	Switching type
omit	Standard w/o vent function
09	Solenoid not activ. unpress. circulation
11	Solenoid activated unpress. circulation

Pilot oil		
Code	Pilot	Drain
4	External via port X1 or X2	External
5	External via port X1 or X2	Internal

Further options on request

[1] R5U10-495 up to 280 bar.
[2] To be used in combination with rectifier plugs at 120 VAC / 230 VAC power supply.
[3] Only for vent valve function code 09.

Technical data

General							
Size			**06 (¾")**	**08 (1")**	**10 (1¼")**	**12 (1½")**	
Mounting			Flanged according to SAE61				
Mounting position			unrestricted				
Ambient temperature		[°C]	-20...+60				
$MTTF_D$ value		[years]	75				
Weight		[kg]	3.6	4.6	5.2	8.0	
Hydraulic							
Max. operating pressure		[bar]					
	Ports A, B, X		350	350	280	210	
	Ports Y, Y1		30	30	30	30	
Pressure stages		[bar]	105, 210, 350				
Nominal flow		[l/min]	90	300	600	600	
Fluid			Hydraulic oil according to DIN 51524				
Fluid temperature		[°C]	-20...+70 (NBR: -25...+70)				
Viscosity	permitted	[cSt] / [mm²/s]	20 ... 400				
	recommended	[cSt] / [mm²/s]	30...80				
Filtration			ISO 4406 (1999); 18/16/13				
Electrical							
Duty ratio			100 % ED; CAUTION: coil temperature up to 150 °C possible				
Protection class			IP65 in accordance with EN 60529 (with correctly mounted plug-in connector)				
		Code	G0R	G0Q	GAR	GAG	W30	W31
Supply voltage		[V] [V]	12 V =	24 V =	98 V =	205 V =	110 at 50 Hz 120 at 60 Hz	230 at 50 Hz 240 at 60 Hz
Tolerance supply voltage		[%]	±10	±10	±10	±10	±5	±5
Current consumption	hold	[A]	2.72	1.29	0.33	0.13	0.6 / 0.55	0.3 / 0.27
	in rush	[A]	2.72	1.29	0.33	0.13	2.5 / 2.4	1.25 / 1.2
Power consumption	hold	[W]	32.7	31	31.9	28.2	70/70 VA	70/70 VA
	in rush	[W]	32.7	31	31.9	28.2	280/290 VA	280/290 VA
Solenoid connection			Connector as per EN175301-803, solenoid identification as per ISO 9461					
Wiring min.		[mm²]	3 x 1.5 recommended					
Wiring length max.		[m]	50 recommended					

9

p/Q performance curve

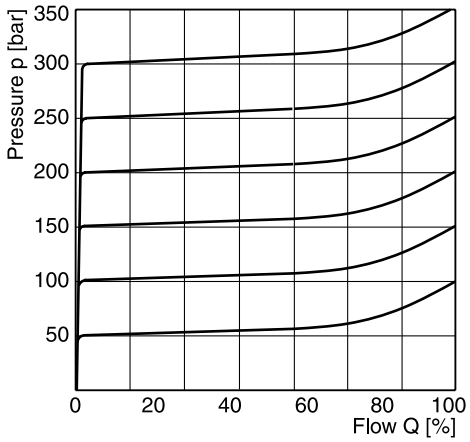

Minimum pressure curve

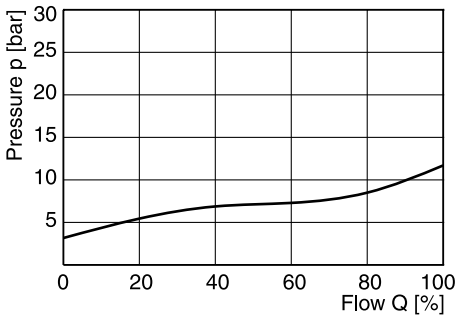

All characteristic curves measured with HLP46 at 50 °C.

The performance curves are measured with external drain.
For internal drain the tank pressure has to be added to curve.

Dimensions R5U

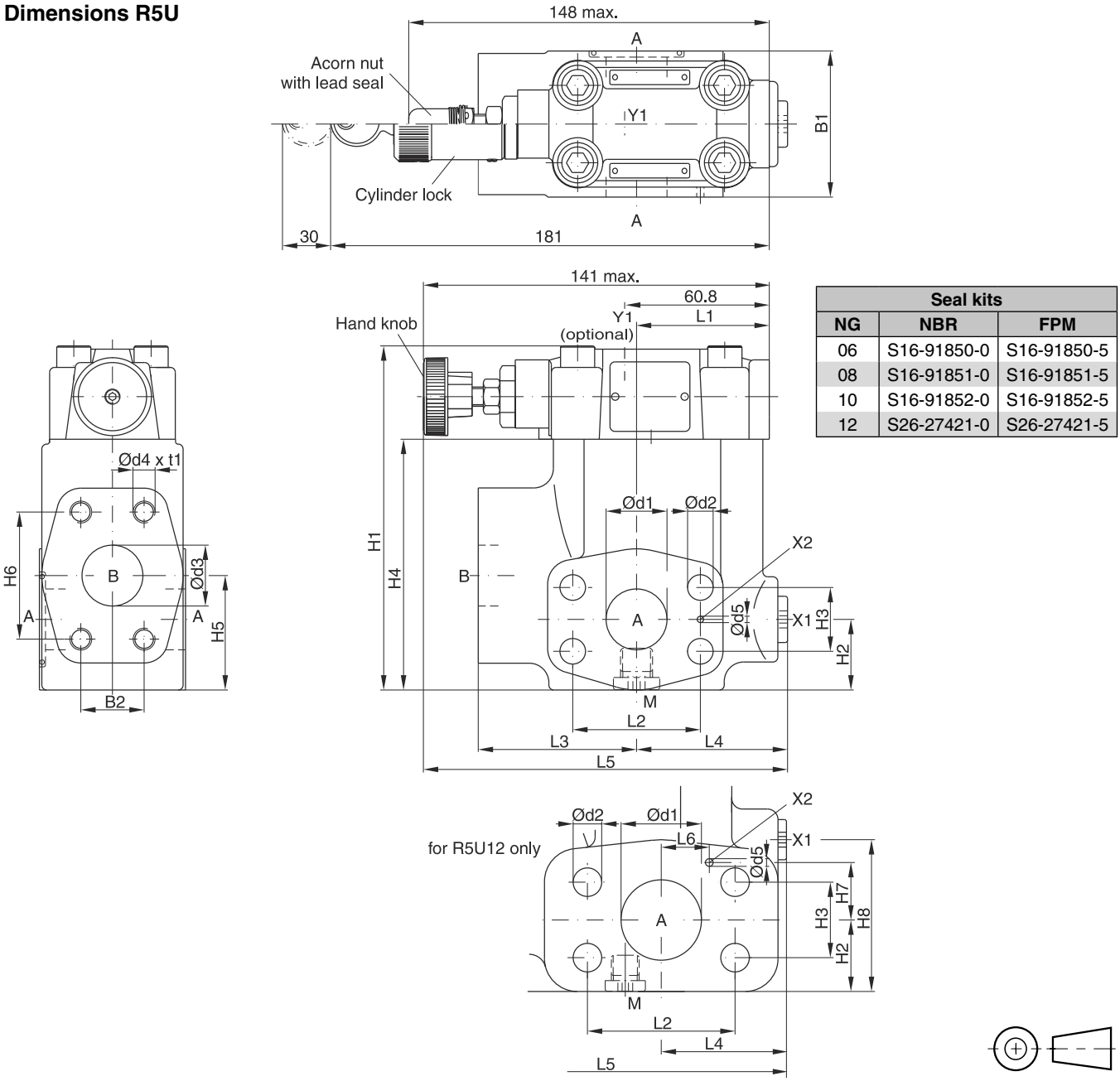

Seal kits		
NG	NBR	FPM
06	S16-91850-0	S16-91850-5
08	S16-91851-0	S16-91851-5
10	S16-91852-0	S16-91852-5
12	S26-27421-0	S26-27421-5

NG	B1	B2	H1	H2	H3	H4	H5	H6	L1	L2	L3	L4	L5	d1	d2	d3	d4	t1	d5	L6	H7	H8
06	60	22.2	119	29.5	22.2	81	41	47.6	50.3	47.6	63	60	152	19	10.5	19	3/8”-16 UNC	20	3.0	–	–	–
08	60	26.2	141	30.5	26.2	103	47	52.4	55.8	52.4	65	62	149	25	10.5	25	3/8”-16 UNC	23	3.0	–	–	–
10	75	30.2	151	37.5	30.2	113	65	58.7	57.8	58.7	61	68	150.5	32	12.5	30	7/16”-14 UNC	22	3.0	–	–	–
12	80	35.7	178	35.5	35.7	140	73	69.8	37.3	69.8	92.5	59.2	171.2	38	13.5	38	1/2”-13 UNC	27	3.0	22.4	27.2	72

Port	Function	Port size			
		R5U06	R5U08	R5U10	R5U12
A (2)	Pressure	¾" SAE61	1" SAE61	1¼" SAE61	1½" SAE61
B	Tank	¾" SAE61	1" SAE61	1¼" SAE61	1½" SAE61
X1	External pilot port [1)]	G¼"	G¼"	G¼"	G¼"
Y1	External drain	G¼"	G¼"	G¼"	G¼"
M	Pressure gauge	G¼"	G¼"	G¼"	G¼"

[1)] Closed when supplied.

R5U UK.INDD 10.04.19

Dimensions R5U with vent function

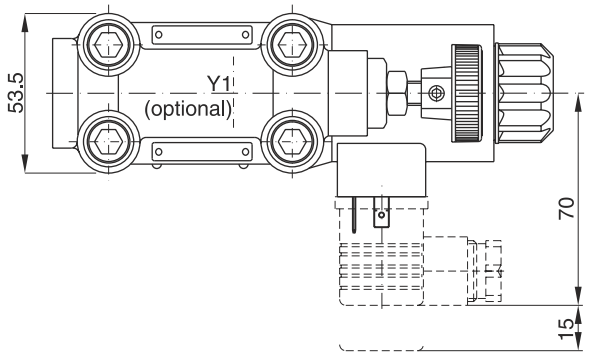

Seal kits	
NBR	**FPM**
DC solenoid	
S56-40609-0	S56-40609-5
AC solenoid	
S26-35237-0	S26-35237-5

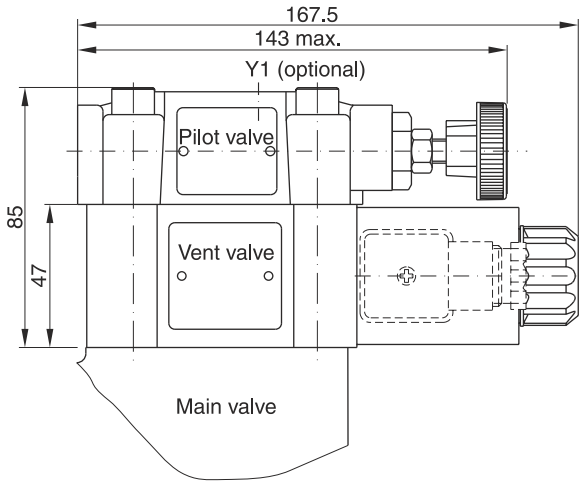

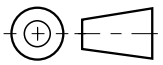

9

Code	Internal drain	External drain
11	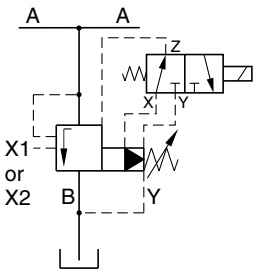	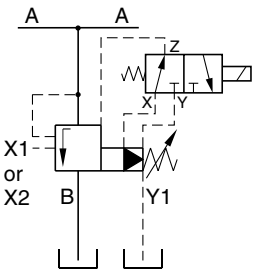
09	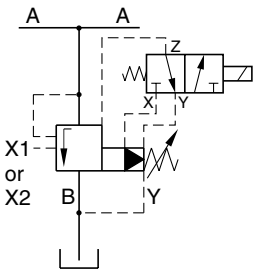	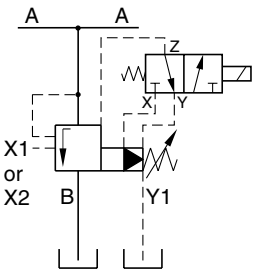

Pilot operated sequence valves series R5S have a similar design to the subplate mounted R4S series. The SAE flanges allow to mount the valve directly on the inlet flanges of actuators or outlet flanges of pumps to achieve a very compact design.



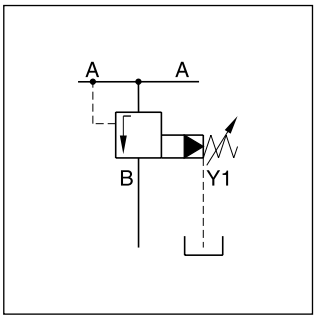

Features

- Pilot operated with manual adjustment
- 3-port body with SAE61 flange
- 3 sizes (SAE ¾", 1", 1¼")
- 3 pressure stages
- 2 adjustment modes
  - Hand knob
  - Acorn nut with lead seal
- Optional with vent function (on request)

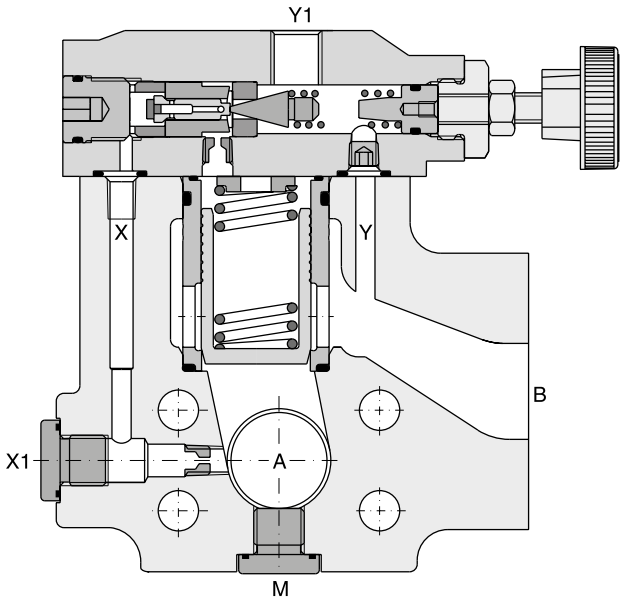

9

Ordering code

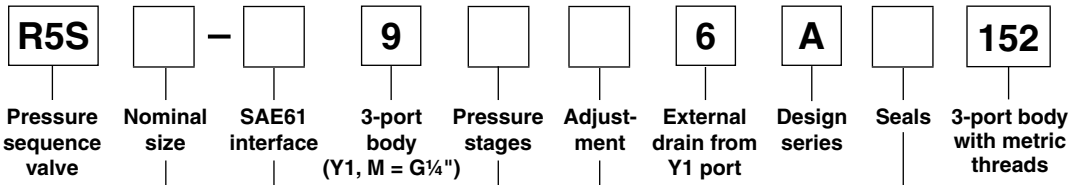

Code	Port size
06	SAE ¾"
08	SAE 1"
10	SAE 1¼"

SAE 61		
Code	Size	Max. pressure [bar]
4	10	280
5	06/08	350

Code	Pressure stages
1	up to 105 bar
3	up to 210 bar
5 [1)]	up to 350 bar

Code	Seals
1	NBR
5	FPM

Code	Adjustment
1	Hand knob
3	Acorn nut with lead seal

Further options on request

Technical data

General			
Size	**06 (¾")**	**08 (1")**	**10 (1¼")**
Mounting	Flanged according to SAE61		
Mounting position	unrestricted		
Ambient temperature [°C]	-20...+60		
$MTTF_D$ value [years]	75		
Weight [kg]	3.6	4.6	5.2
Hydraulic			
Max. operating pressure [bar]			
Ports A, B	350	350	280
Ports Y, Y1	30	30	30
Pressure stages [bar]	105, 210, 350		
Nominal flow [l/min]	90	300	600
Fluid	Hydraulic oil according to DIN 51524		
Fluid temperature [°C]	-20...+70 (NBR: -25...+70)		
Viscosity permitted [cSt] / [mm^2/s]	20 ... 400		
Viscosity recommended [cSt] / [mm^2/s]	30...80		
Filtration	ISO 4406 (1999); 18/16/13		

[1)] R5S10-495 up to 280 bar.

Typical pressure characteristics at closing point

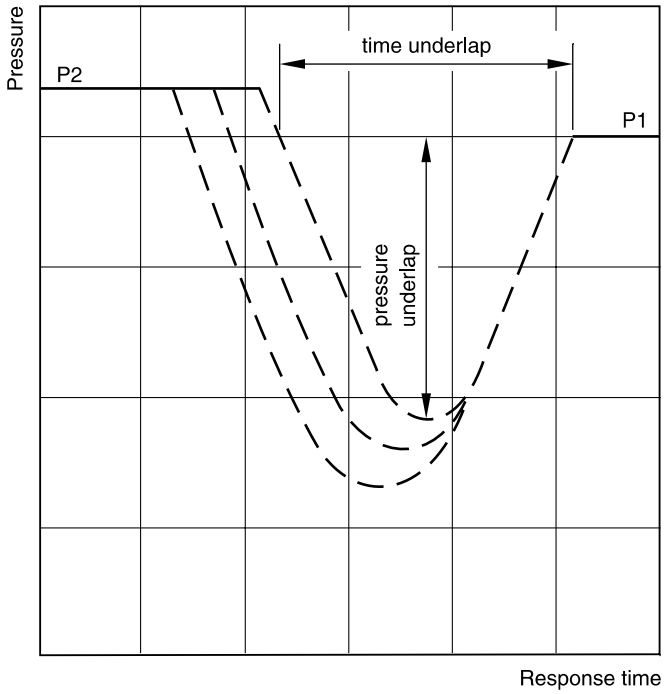

P1 = setting pressure
P2 = operating pressure

Time and pressure underlap depend on the characteristics of the specific system.

9

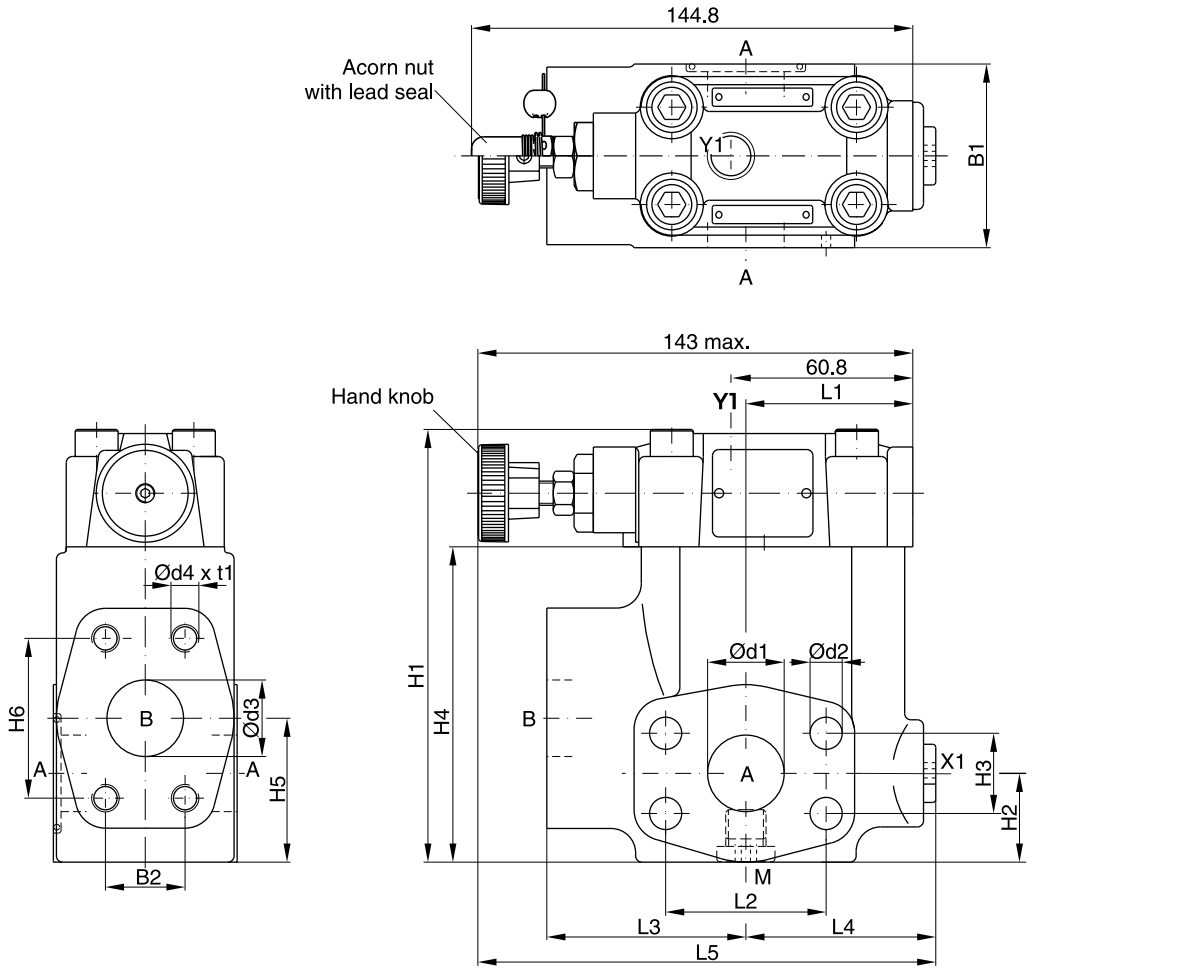

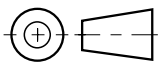

9

SAE61

Seal kits		
NG	**NBR**	**FPM**
06	S16-91850-0	S16-91850-5
08	S16-91851-0	S16-91851-5
10	S16-91852-0	S16-91852-5

NG	B1	B2	H1	H2	H3	H4	H5	H6	L1	L2	L3	L4	L5	d1	d2	d3	d4 (option 152)	t1
06	60	22.2	119	29.5	22.2	81	41	47.6	50.3	47.6	63	60	152	19	10.5	19	3/8”-16 UNC (M10)	20
08	60	26.2	141	30.5	26.2	103	47	52.4	55.8	52.4	65	62	149	25	10.5	25	3/8”-16 UNC (M10)	23
10	75	30.2	151	37.5	30.2	113	65	58.7	57.8	58.7	61	68	150.5	32	12.5	30	7/16”-14 UNC (M12)	22

Port	Function	Port size		
		R5S06	R5S08	R5S10
A (2)	Pressure	¾" SAE61	1" SAE61	1¼" SAE61
B	Secondary port	¾" SAE61	1" SAE61	1¼" SAE61
X1	External pilot port [1]	G¼"	G¼"	G¼"
Y1	External drain	G¼"	G¼"	G¼"
M	Pressure gauge	G¼"	G¼"	G¼"

[1] Closed when supplied.

R5S UK.INDD 10.04.19

Pilot operated pressure reducing valves series R5R have a similar design as the subplate mounted R4R series. The SAE flanges allow to mount the valves directly on the inlet flanges of actuators to achieve a very compact design.



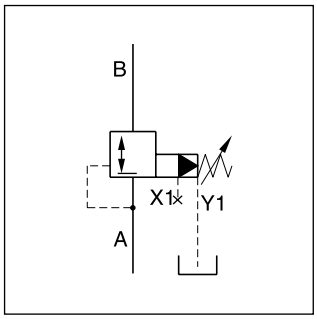

Features

- Pilot operated with manual adjustment
- Normally closed to avoid unintended motion
- 2-port body with SAE61 flange
- 3 sizes (SAE ¾", 1", 1¼")
- 3 pressure stages
- 3 adjustment modes
  - Hand knob
  - Acorn nut with lead seal
  - Cylinder lock
- With optional vent function
- Flow direction B → A

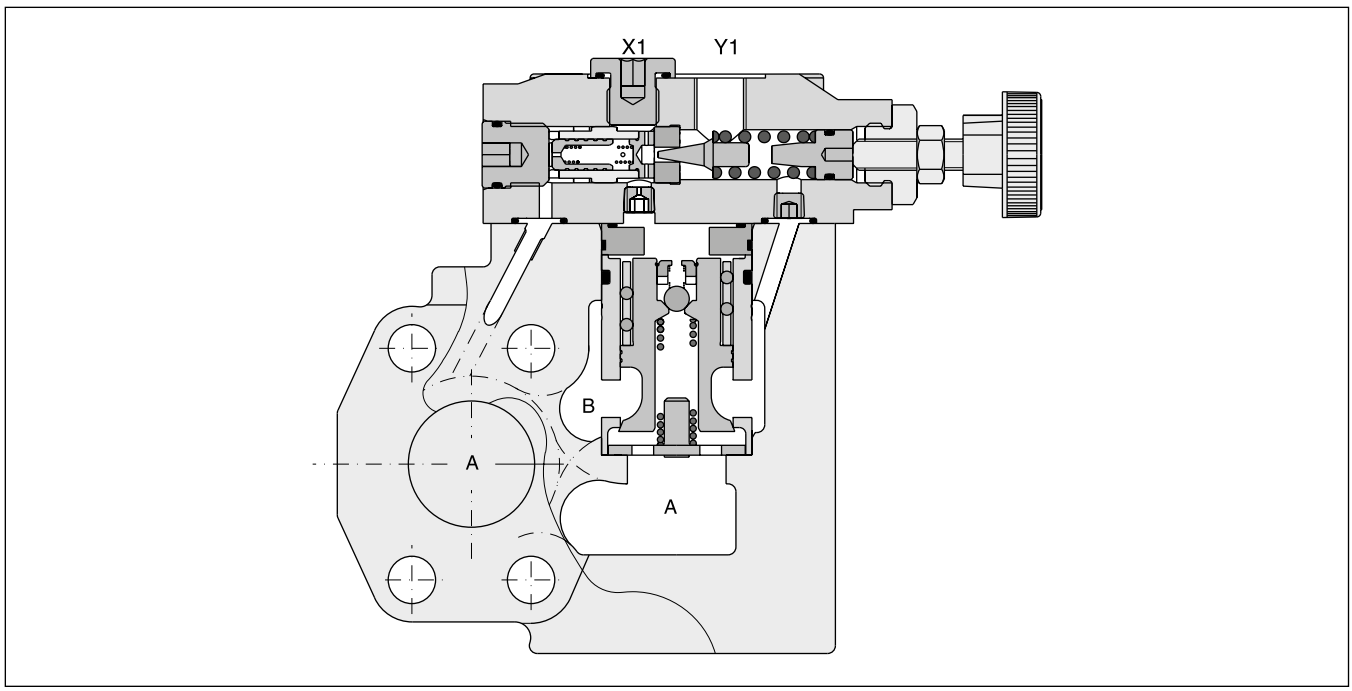

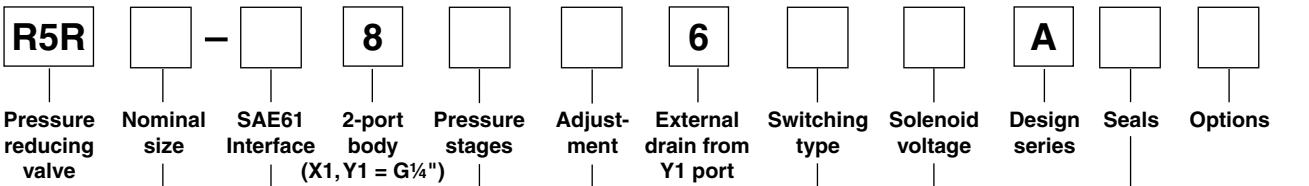

Code	Port size
06	SAE ¾"
08	SAE 1"
10	SAE 1¼"

SAE61		
Code	Size	Max. pressure [bar]
4	10	280
5	06/08	350

Code	Pressure stages
1	up to 105 bar
3	up to 210 bar
5 [1]	up to 350 bar

Code	Adjustment
1	Hand knob
3	Acorn nut with lead seal
4	Cylinder lock

Code	Seals
1	NBR
5	FPM

Code	Solenoid voltage
omit	Standard w/o vent function
G0R	12 V=
G0Q	24 V=
GAR [2]	98 V=
GAG [2]	205 V=
W30	110 V / 50 Hz 120 V / 60Hz
W31	230 V / 50 Hz 240 V / 60 Hz

Code	Switching type
omit	Standard w/o vent function
09	Solenoid not activated, pressure reducer non-active
11	Solenoid activated pressure reducer non-active

Further options on request

9

[1] R5R10-485 up to 280 bar.
[2] To be used in combination with rectifier plugs at 120 VAC / 230 VAC power supply.

General								
Size			**06 (¾")**		**08 (1")**		**10 (1¼")**	
Mounting			Flanged according to SAE61					
Mounting position			unrestricted					
Ambient temperature		[°C]	-20...+60					
$MTTF_D$ value		[years]	75					
Weight		[kg]	4.0		4.6		5.9	
Hydraulic								
Max. operating pressure		[bar]						
	Ports A, B, X1		350		350		280	
	Port Y1		30		30		30	
Flow direction			B → A					
Pressure stages		[bar]	105, 210, 350					
Nominal flow		[l/min]	90		300		500	
Fluid			Hydraulic oil according to DIN 51524					
Fluid temperature		[°C]	-20...+70 (NBR: -25...+70)					
Viscosity	permitted	[cSt] / [mm^2/s]	20...400					
	recommended	[cSt] / [mm^2/s]	30...80					
Filtration			ISO 4406 (1999); 18/16/13					
Electrical								
Duty ratio			100% ED; CAUTION: coil temperature up to 150 °C possible					
Protection class			IP65 in accordance with EN 60529 (with correctly mounted plug-in connector)					
		Code	G0R	G0Q	GAR	GAG	W30	W31
Supply voltage		[V] [V]	12 V =	24 V =	98 V =	205 V =	110 at 50 Hz 120 at 60 Hz	230 at 50 Hz 240 at 60 Hz
Tolerance supply voltage		[%]	±10	±10	±10	±10	±5	±5
Current consumption	hold	[W]	2.72	1.29	0.33	0.13	0.6 / 0.55	0.3 / 0.27
	in rush	[W]	2.72	1.29	0.33	0.13	2.5 / 2.4	1.25 / 1.2
Power consumption	hold	[ms]	32.7	31	31.9	28.2	70/70 VA	70/70 VA
	in rush		32.7	31	31.9	28.2	280/290 VA	280/290 VA
Solenoid connection			Connector as per EN175301-803, solenoid identification as per ISO 9461					
Wiring min.		[mm^2]	3 x 1.5 recommended					
Wiring length max.		[m]	50 recommended					

9

Reduced pressure pA versus flow Q
R5R06 [1)]

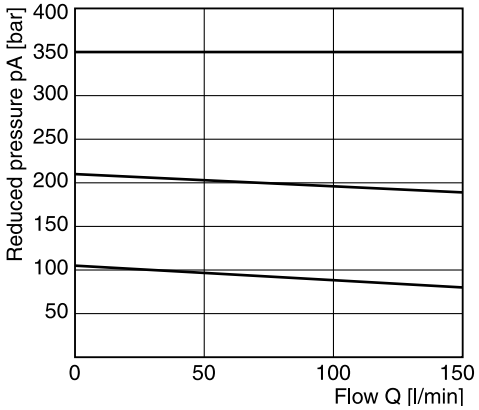

Minimum pressure curve

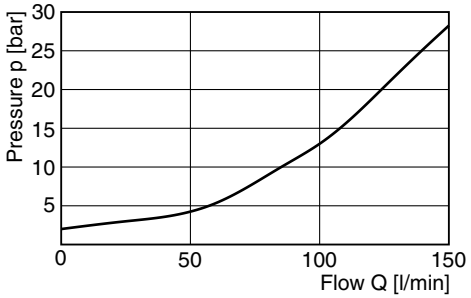

Reduced pressure pA versus flow Q
R5R08 [1)]

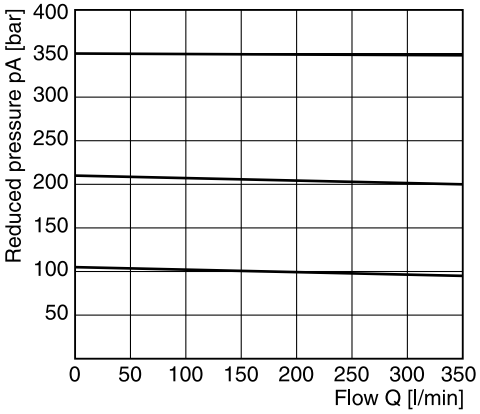

Minimum pressure curve

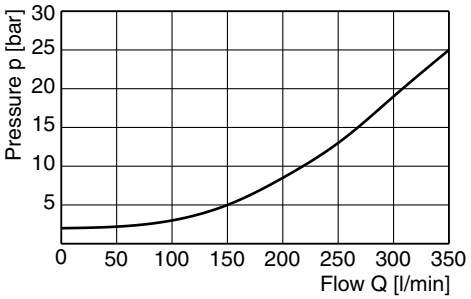

9

Reduced pressure pA versus flow Q
R5R10 [1)]

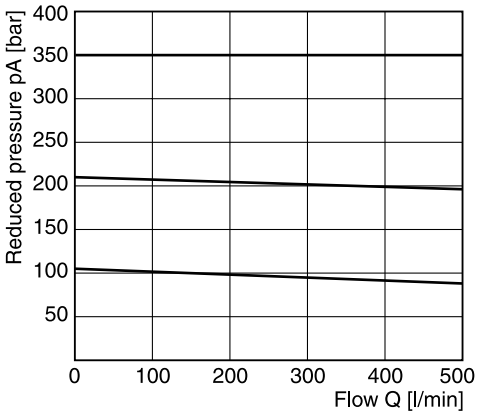

Minimum pressure curve

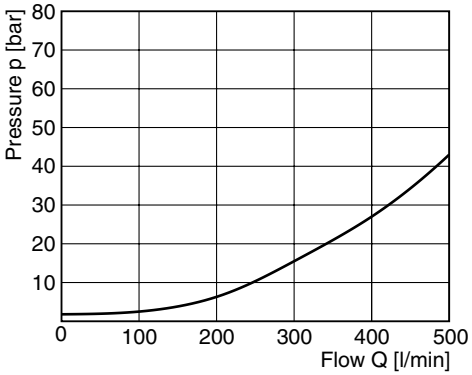

All characteristic curves measured with HLP46 at 50 °C.

[1)] Measured at 350 bar primary pressure pB.

R5R

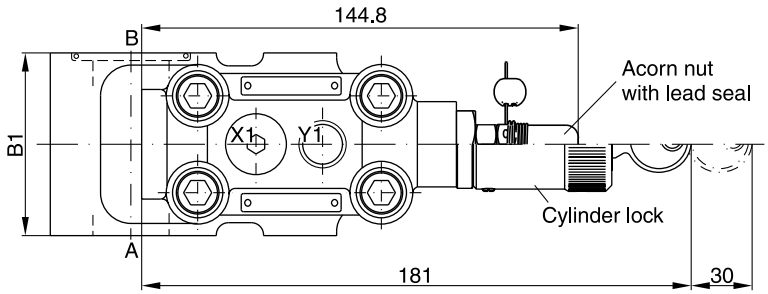

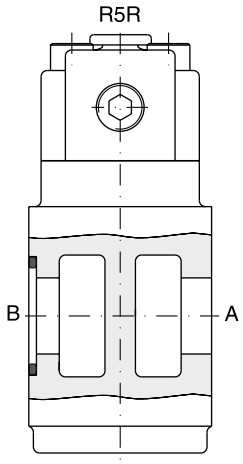

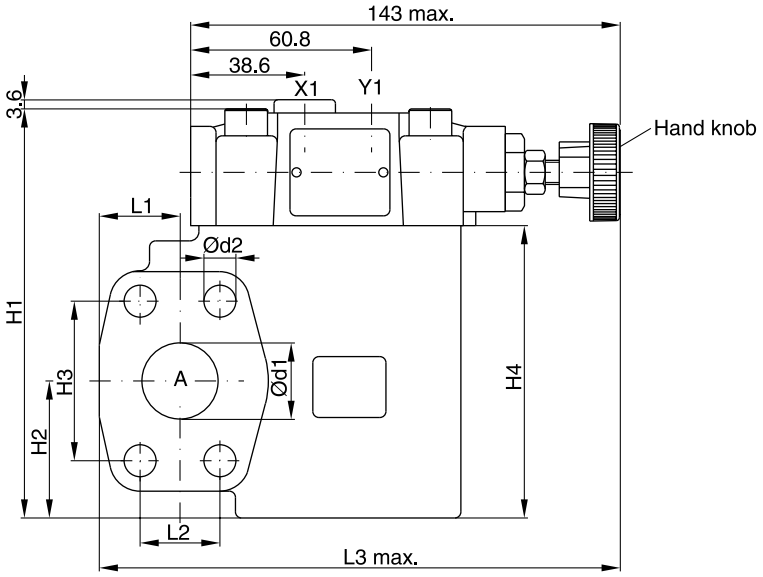

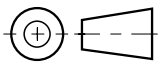

Seal kits		
NG	**NBR**	**FPM**
06	S16-91850-0	S16-91850-5
08	S16-91851-0	S16-91851-5
10	S16-91852-0	S16-91852-5

NG	B1	H1	H2	H3	H4	L1	L2	L3	d1	d2
06	60	131.6	37	47.6	90	24.6	22.2	152	19	10.5
08	60	137.6	45	52.4	96	26.5	26.2	171	25	10.5
10	75	150.6	48	58.7	109	34.0	30.2	179	32	12.5

Port	Function	Port size		
		R5R06	**R5R08**	**R5R10**
B	Inlet pressure	¾" SAE61	1" SAE61	1¼" SAE61
A	Reduced outlet pressure	¾" SAE61	1" SAE61	1¼" SAE61
Y1	External drain	G¼"	G¼"	G¼"
X1	Pressure gauge	G¼"	G¼"	G¼"

R5R with vent function

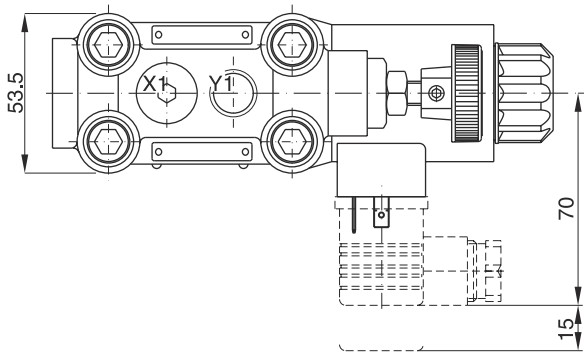

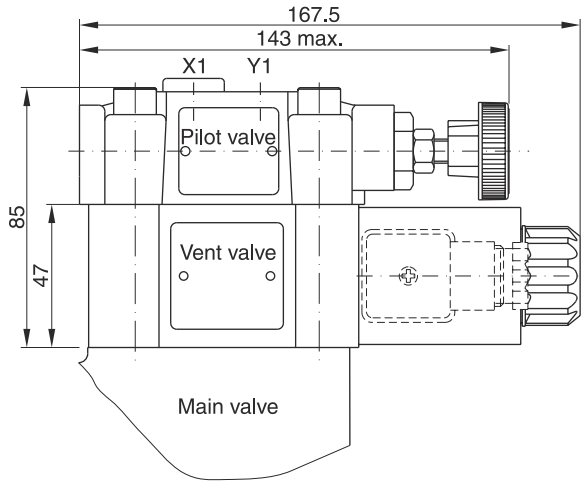

Seal kits	
NBR	**FPM**
DC solenoid	
S56-40609-0	S56-40609-5
AC solenoid	
S26-35237-0	S26-35237-5

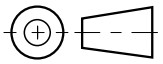

9

Code	External drain
11	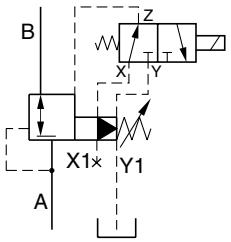
09	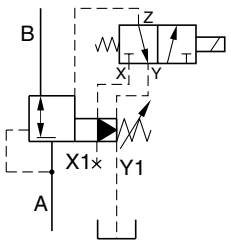

Proportional pressure relief valves series R5V*P2 are based on the mechanically adjusted series R5V. The additional proportional unit between the mechanical pilot valve and the main stage allows continuous pressure adjustment.

The optimum performance can be achieved in combination with the digital amplifier module PCD00A-400.

Features

- Continuous adjustment by proportional solenoid
- R5V with 2-port body
  - 3 sizes (SAE ¾", 1", 1¼")
  - SAE61 flange
- R5V with 3-port body
  - 4 sizes (SAE ¾", 1", 1¼", 1½")
  - SAE61 and SAE62 flange
- 3 pressure stages
- With mechanical maximum pressure adjustment



R5V*P2 2-port



R5V*P2 3-port

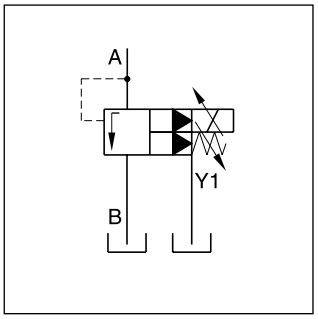

R5V*P2 2-port

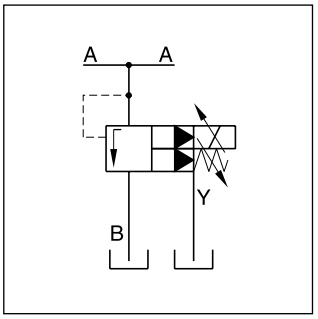

R5V*P2 3-port

R5V*P2 2-port

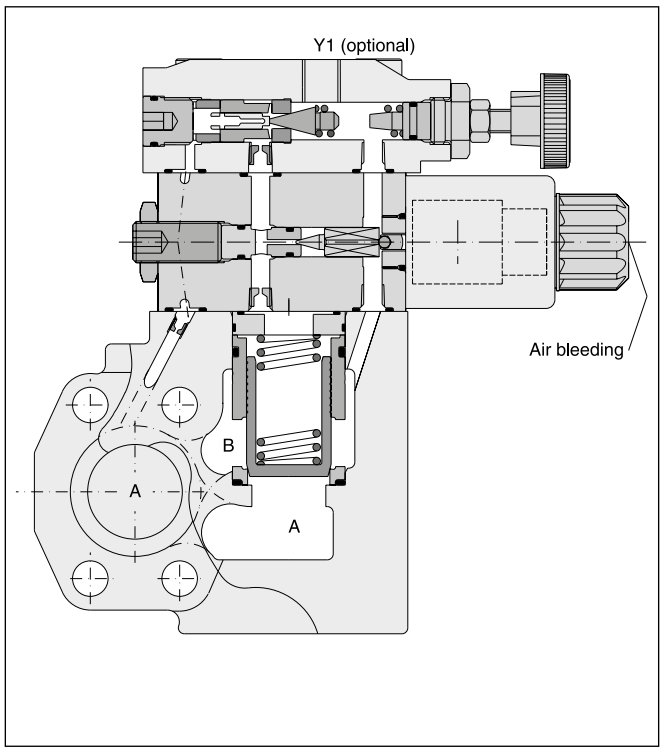

R5V*P2 3-port

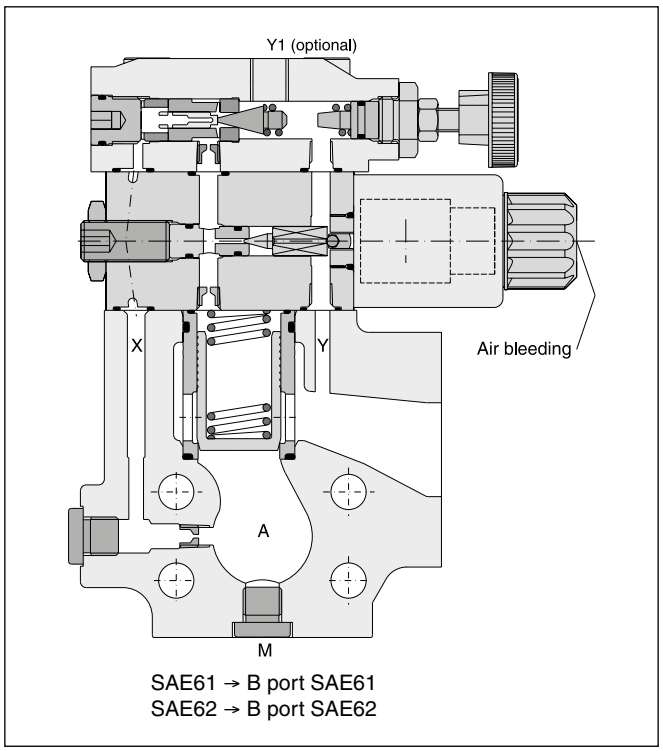

9

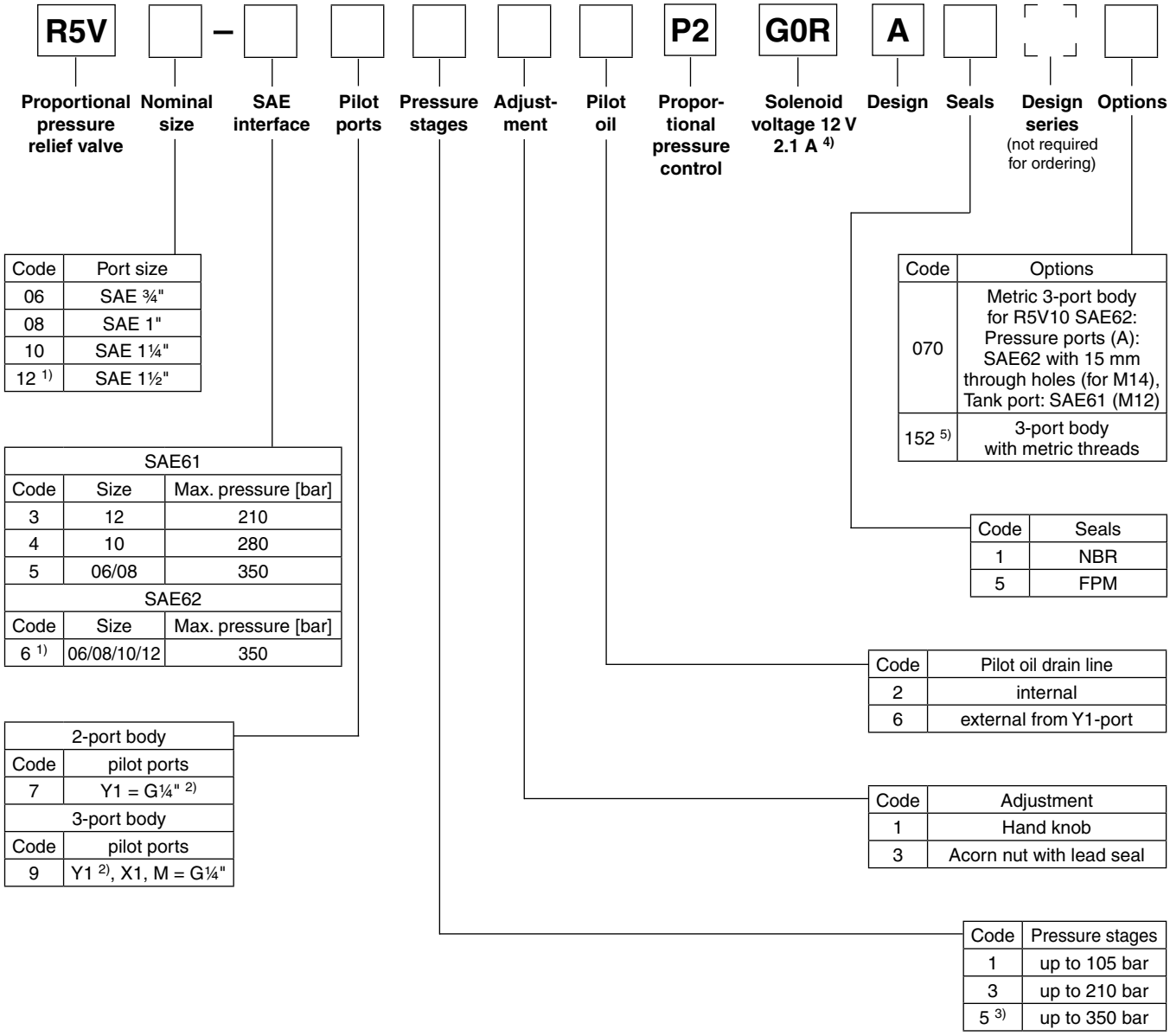

Code	Port size
06	SAE ¾"
08	SAE 1"
10	SAE 1¼"
12 [1]	SAE 1½"

SAE61		
Code	Size	Max. pressure [bar]
3	12	210
4	10	280
5	06/08	350
SAE62		
Code	Size	Max. pressure [bar]
6 [1]	06/08/10/12	350

2-port body	
Code	pilot ports
7	Y1 = G¼" [2]
3-port body	
Code	pilot ports
9	Y1 [2], X1, M = G¼"

Code	Options
070	Metric 3-port body for R5V10 SAE62: Pressure ports (A): SAE62 with 15 mm through holes (for M14), Tank port: SAE61 (M12)
152 [5]	3-port body with metric threads

Code	Seals
1	NBR
5	FPM

Code	Pilot oil drain line
2	internal
6	external from Y1-port

Code	Adjustment
1	Hand knob
3	Acorn nut with lead seal

Code	Pressure stages
1	up to 105 bar
3	up to 210 bar
5 [3]	up to 350 bar

[1] Only R5V 3port.
[2] Y1 only available at external drain (pilot oil code 6).
[3] R5V10-4*5 up to 280 bar.
[4] Onboard electronics on request.
[5] R5V08 SAE62: Tank port SAE61 (M10).

General						
Size			**06 (¾")**	**08 (1")**	**10 (1¼")**	**12 (1½")**
Mounting			Flanged according to SAE61 (size 12 = SAE62)			
Mounting position			unrestricted			
Ambient temperature		[°C]	-20...+60			
$MTTF_D$ value		[years]	75			
Weight	R5V 2-port	[kg]	5.8	6.4	7.7	—
	R5V 3-port	[kg]	5.4	6.4	7.0	9.8
Hydraulic						
Max. operating pressure		[bar]				
	SAE61 Ports A, B		350	350	280	210
	Port Y1		30	30	30	30
	SAE62 Ports A, B		350	350	350	350
	Port Y1		30	30	30	30
Pressure stages		[bar]	105, 210, 350			
Nominal flow		[l/min]	90	300	600	600
Fluid			Hydraulic oil according to DIN 51524			
Fluid temperature		[°C]	-20...+70 (NBR: -25...+70)			
Viscosity permitted		[cSt] / [mm^2/s]	20...400			
Viscosity recommended		[cSt] / [mm^2/s]	30...80			
Filtration			ISO 4406 (1999); 18/16/13			
Electrical (proportional solenoid)						
Duty ratio			100 % ED; CAUTION: coil temperature up to 150 °C possible			
Protection class			IP65 in accordance with EN 60529 (with correctly mounted plug-in connector)			
Code			G0R			
Supply voltage		[V]	12 V =			
Max. current		[A]	2.1			
Coil resistance at 20 °C		[Ohm]	4.28			
Solenoid connection			Connector as per EN 175301-803			
Power amplifier, recommended			PCD00A-400			

Signal/pressure curve R5V*P2

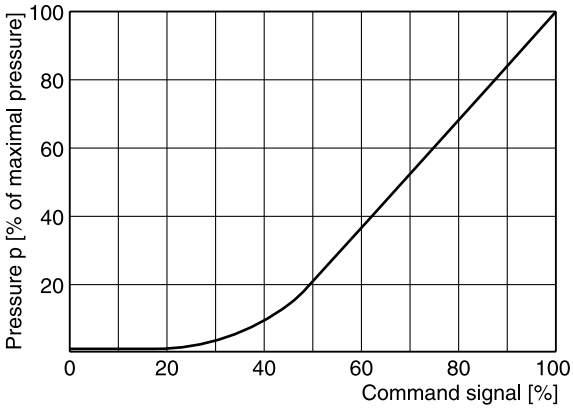

p/Q performance curve [1)]

R5V06*P2

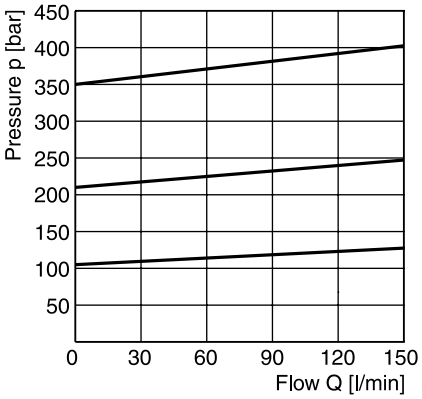

R5V08*P2

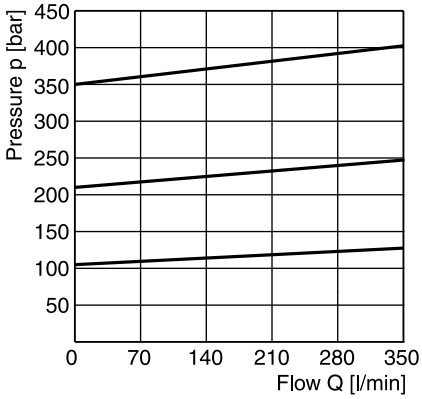

R5V10*P2

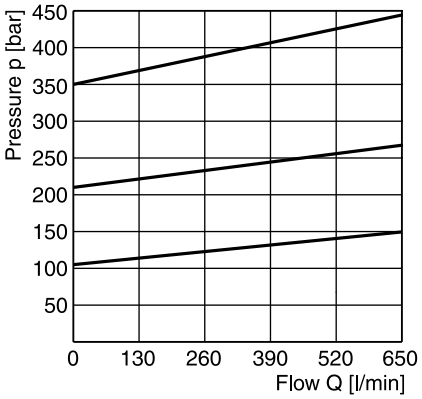

9

Minimum pressure curve [1)]

R5V06*P2

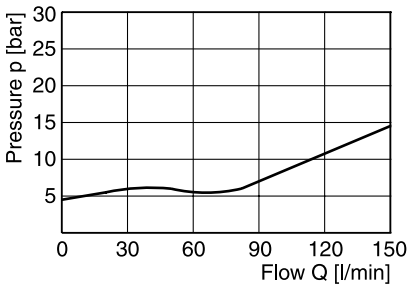

R5V08*P2

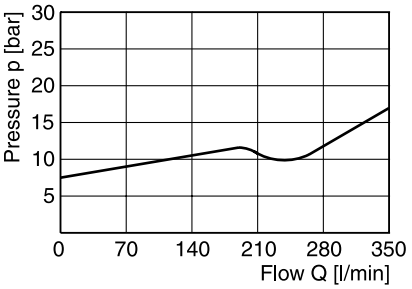

R5V10*P2

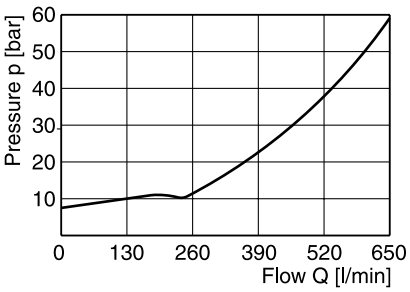

All characteristic curves measured with HLP46 at 50 °C.

[1)] The performance curves are measured with external drain. For internal drain the tank pressure has to be added to curve.

R5V*P2 2-port

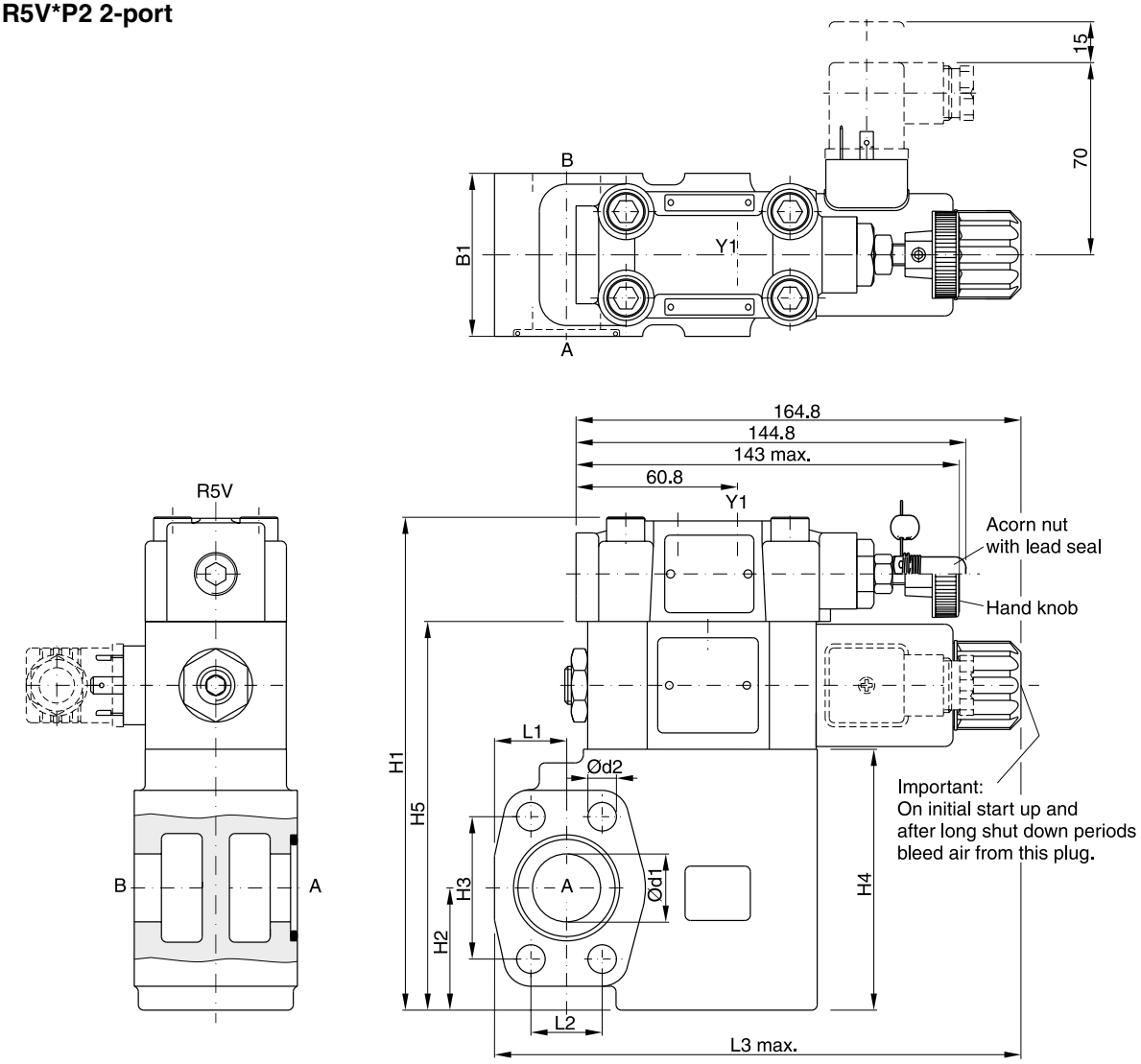

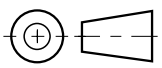

9

SAE61

Seal kits		
NG	**NBR**	**FPM**
06	S16-91850-0	S16-91850-5
08	S16-91851-0	S16-91851-5
10	S16-91852-0	S16-91852-5
Prop. section P2 *	S26-58473-0	S26-58473-5

NG	B1	H1	H2	H3	H4	H5	L1	L2	L3	d1	d2
06	60	175	37	47.6	90	137	24.6	22.2	174	19	10.5
08	60	181	45	52.4	96	143	26.5	26.2	193.6	25	10.5
10	75	194	48	58.7	109	156	34.0	30.2	201	32	12.5

Port	Function	Port size		
		R5V06	**R5V08**	**R5V10**
A	Pressure	¾" SAE61	1" SAE61	1¼" SAE61
B	Tank	¾" SAE61	1" SAE61	1¼" SAE61
Y1	External drain	G¼"	G¼"	G¼"

* Please combine seal kit of one size with seal kit of Prop. section P2 for complete seal kit.

R5V*P2 3-port

Seal kits		
NG	**NBR**	**FPM**
06	S16-91850-0	S16-91850-5
08	S16-91851-0	S16-91851-5
10	S16-91852-0	S16-91852-5
12	S26-27421-0	S26-27421-5
Prop. section P2 *	S26-58473-0	S26-58473-5

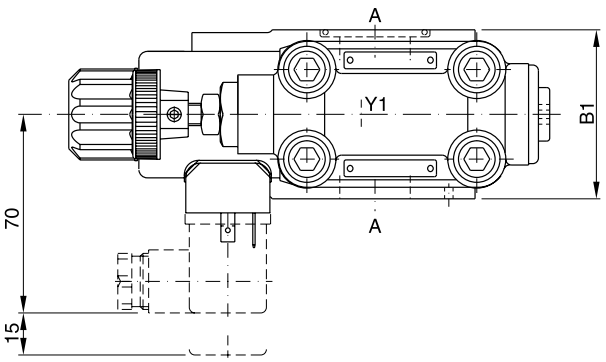

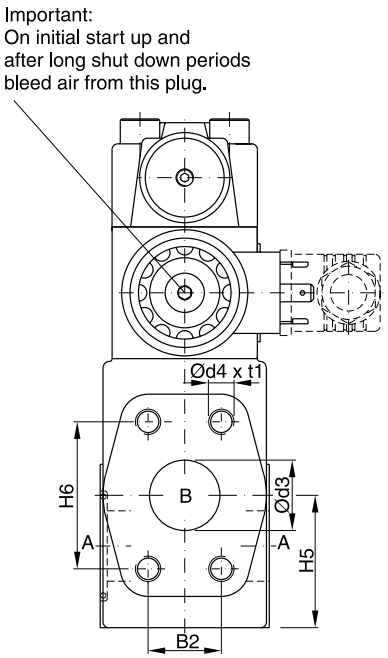

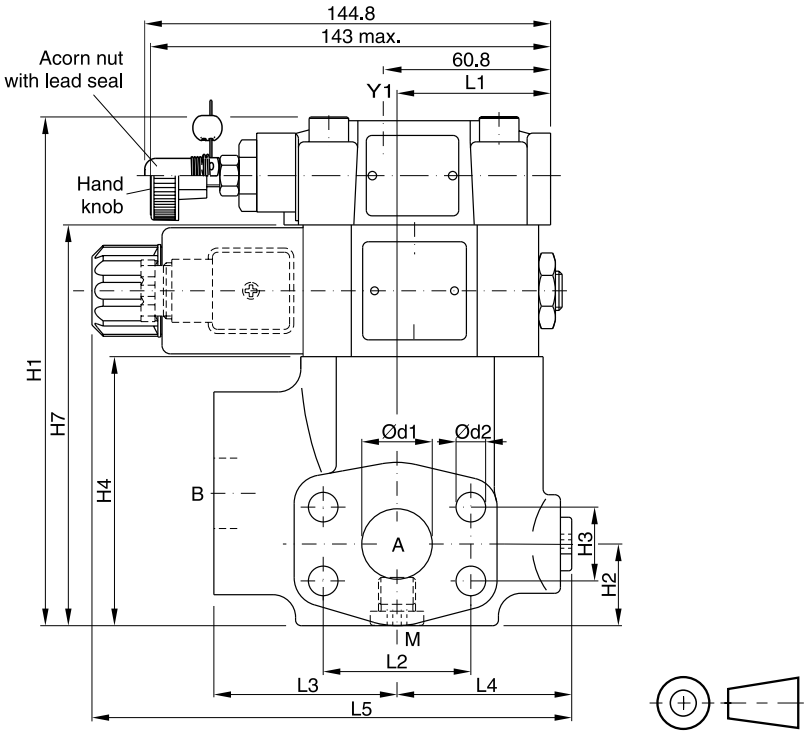

9

SAE61

NG	B1	B2	H1	H2	H3	H4	H5	H6	H7	L1	L2	L3	L4	L5	d1	d2	d3	d4 (option 152)	t1
06	60	22.2	166	29.5	22.2	81	41	47.6	128	50.3	47.6	63	60	174.6	19	10.5	19	3/8"-16 UNC (M10)	20
08	60	26.2	188	30.5	26.2	103	47	52.4	150	55.8	52.4	65	62	177	25	10.5	25	3/8"-16 UNC (M10)	23
10	75	30.2	198	37.5	30.2	113	65	58.7	160	57.8	58.7	61	68	179.1	32	12.5	30	7/16"-14 UNC (M12)	22
12	80	35.7	225	72	35.7	140	73	69.8	187	37.3	69.8	92.5	59.2	186.8	38	13.5	38	1/2"-13 UNC (M12)	27

SAE62

NG	B1	B2	H1	H2	H3	H4	H5	H6	L1	L2	L3	L4	L5	d1	d2	d3	d4 (option 152)	t1
06	60	23.8	119	29.5	23.8	81	41	50.8	50.3	50.8	63	60	152	19	10.5	19	3/8"-16 UNF (M10)	20
08	60	27.8	141	30.5	27.8	103	47	57.2	55.8	57.2	65	62	149	25	12.5	25	7/16"-14 UNC (M10)[1)]	22
10	75	31.8	151	37.5	31.8	113	65	66.7	57.8	66.7	61	68	150.5	32	13.5	30	1/2"-13 UNC (M12)	24
12	80	36.5	178	72	36.5	140	73	79.4	37.3	79.4	92.5	59.2	171.2	38	17	38	5/8"-11 UNC (M16)	33

Port	Function	Port size			
		R5V06	**R5V08**	**R5V10**	**R5V12**
A (2)	Pressure	¾" SAE61/62	1" SAE61/62	1¼" SAE61/62	1½" SAE61/62
B	Tank	¾" SAE61/62	1" SAE61/62	1¼" SAE61/62	1½" SAE61/62
Y1	External drain	G¼"	G¼"	G¼"	G¼"
M	Pressure gauge	G¼"	G¼"	G¼"	G¼"

* Please combine seal kit of one size with seal kit of Prop. section P2 for complete seal kit.

[1)] T-port SAE61.

Proportional pressure reducing valves series R5R*P2 are based on the mechanically adjusted series R5R. The additional proportional unit between the mechanical pilot valve and the main stage allows continuous pressure adjustment.

The optimum performance can be achieved in combination with the digital amplifier module PCD00A-400.



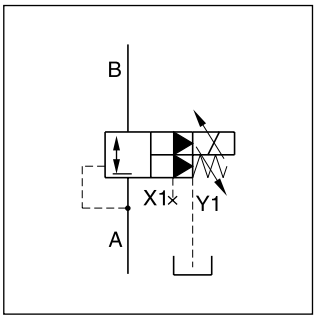

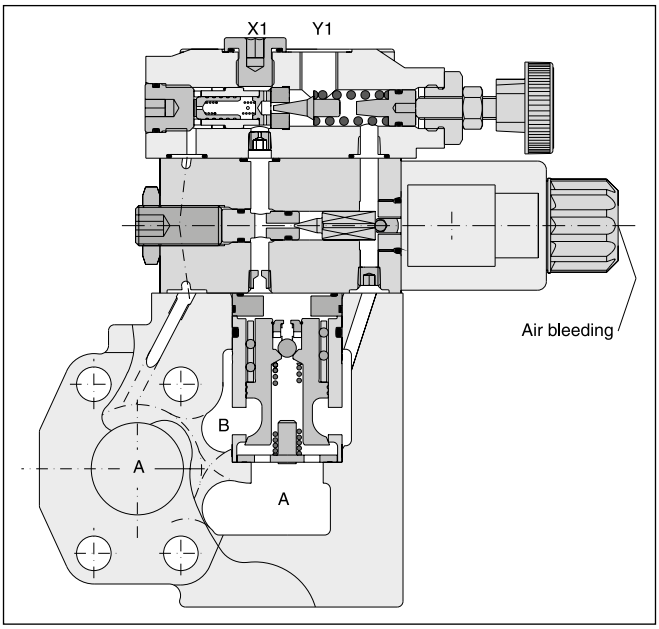

Features

- Continuous adjustment by proportional solenoid
- 2-port body with SAE61 flange
- 3 sizes (SAE ¾", 1", 1¼")
- 3 pressure stages
- With mechanical maximum pressure adjustment

Ordering code

R5R		–		8			6	P2	G0R	A		
Pressure reducing valve	Nominal size		SAE61 interface	Body 2-port (X1, Y1 = G¼")	Pressure stages	Adjust-ment	External drain from Y1-port	Propor-tional pressure control	Solenoid voltage 12 V 2.1 A	Design series	Seals	Options

Code	Port size
06	SAE ¾"
08	SAE 1"
10	SAE 1¼"

SAE61		
Code	Size	Max. pressure [bar]
4	10	280
5	06/08	350

Code	Pressure stages
1	up to 105 bar
3	up to 210 bar
5 [1)]	up to 350 bar

Code	Seals
1	NBR
5	FPM

Code	Adjustment
1	Hand knob
3	Acorn nut with lead seal

Further options on request

[1)] R5R10-485 up to 280 bar.

Technical data

General					
Size			**06 (¾")**	**08 (1")**	**10 (1¼")**
Mounting			Flanged according to SAE61		
Mounting position			unrestricted		
Ambient temperature		[°C]	-20...+60		
$MTTF_D$ value		[years]	75		
Weight		[kg]	5.8	6.4	7.7
Hydraulic					
Max. operating pressure	Ports A, B, X1	[bar]	350	350	280
	Port Y1	[bar]	30	30	30
Pressure stages		[bar]	105, 210, 350		
Nominal flow		[l/min]	90	300	500
Fluid			Hydraulic oil according to DIN 51524		
Fluid temperature		[°C]	-20...+70 (NBR: -25...+70)		
Viscosity	permitted	[cSt] / [mm^2/s]	20...400		
	recommended	[cSt] / [mm^2/s]	30...80		
Filtration			ISO 4406 (1999); 18/16/13		
Electrical (proportional solenoid)					
Duty ratio			100 % ED; CAUTION: coil temperature up to 150 °C possible		
Protection class			IP65 in accordance with EN 60529 (with correctly mounted plug-in connector)		
Code			G0R		
Supply voltage		[V]	12 V =		
Max. current		[A]	2.1		
Coil resistance at 20 °C		[Ohm]	4.28		
Solenoid connection			Connector as per EN 175301-803		
Power amplifier, recommended			PCD00A-400		

Command / pressure curve

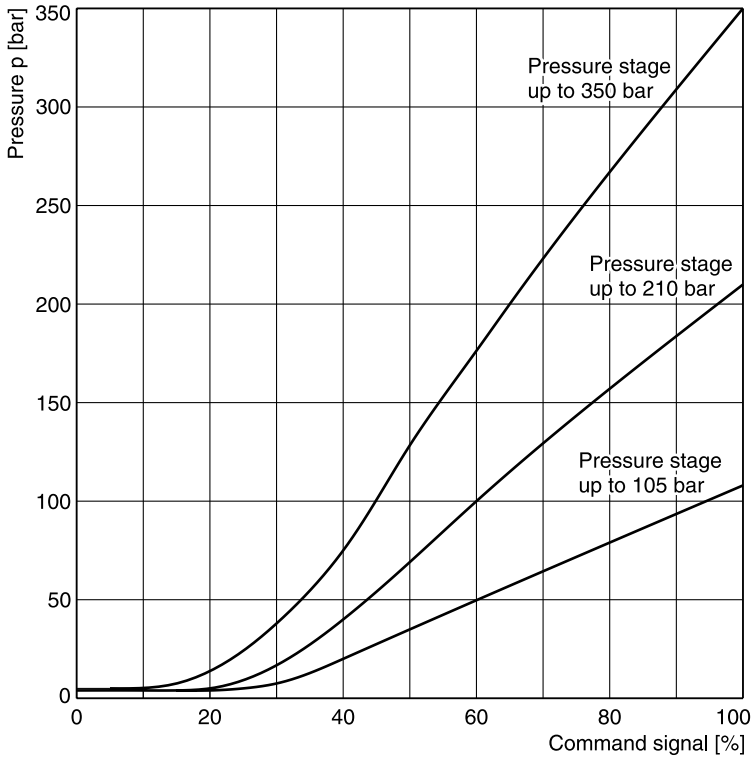

All characteristic curves measured with HLP46 at 50 °C.

Reduced pressure pA vs. flow Q R5R06*P2 [1)]

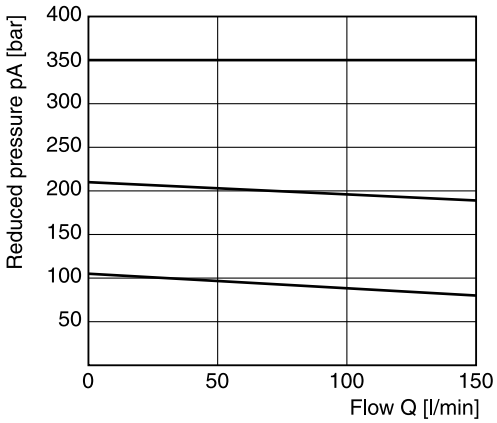

Minimum pressure curve

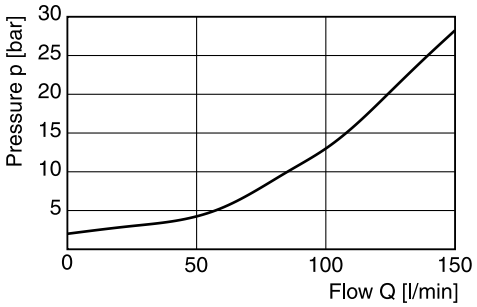

Reduced pressure pA vs. flow Q R5R08*P2 [1)]

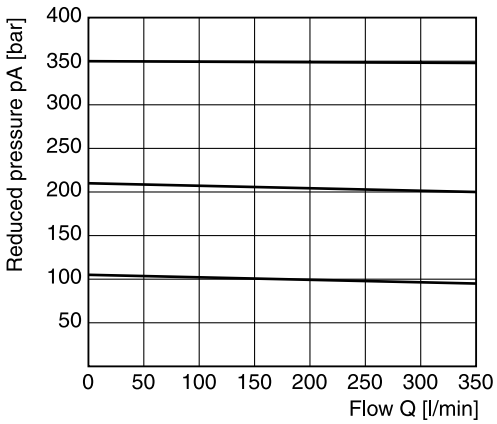

Minimum pressure curve

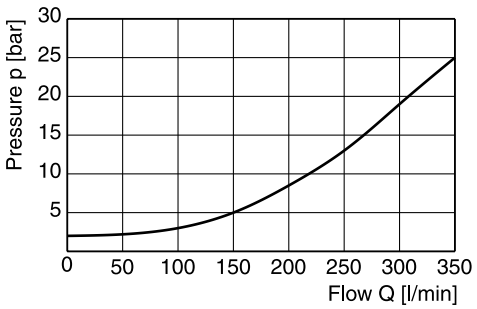

Reduced pressure pA vs. flow Q R5R10*P2 [1)]

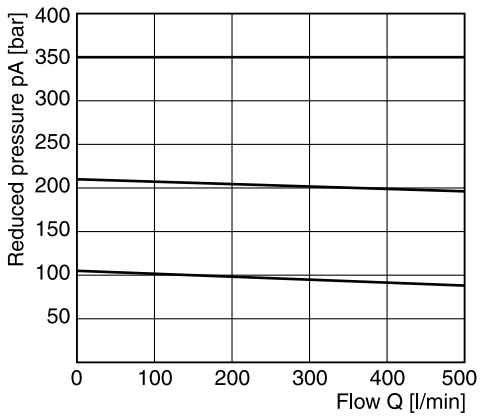

Minimum pressure curve

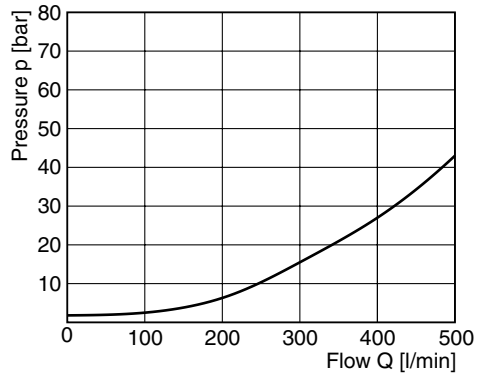

All characteristic curves measured with HLP46 at 50 °C.

[1)] Measured at 350 bar primary pressure pB.

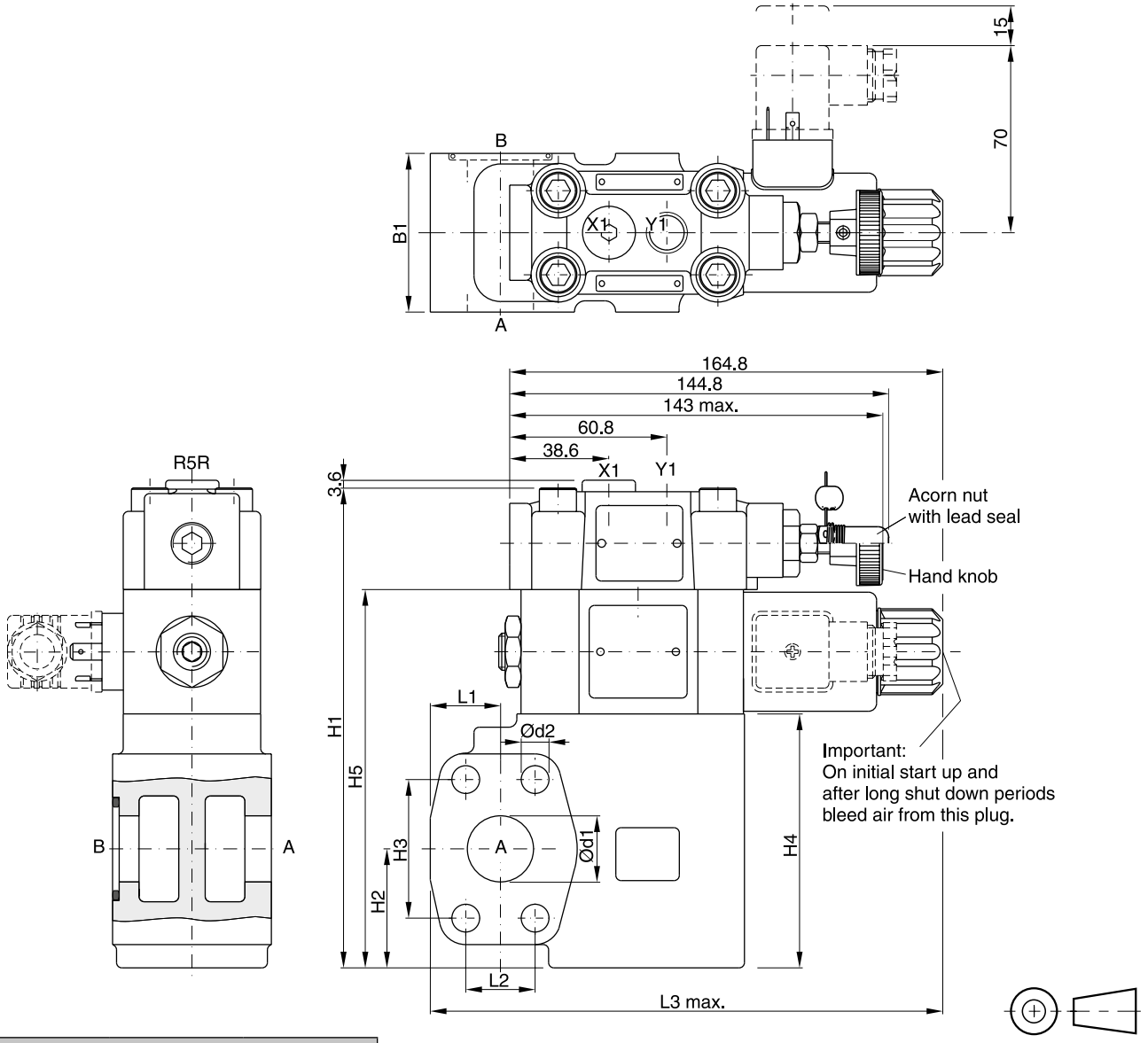

Seal kits		
NG	**NBR**	**FPM**
06	S16-91850-0	S16-91850-5
08	S16-91851-0	S16-91851-5
10	S16-91852-0	S16-91852-5
Prop. section P2 *	S26-58473-0	S26-58473-5

NG	B1	H1	H2	H3	H4	H5	L1	L2	L3	d1	d2
06	60	175	37	47.6	90	137	24.6	22.2	174	19	10.5
08	60	181	45	52.4	96	143	26.5	26.2	193.6	25	10.5
10	75	194	48	58.7	109	156	34.0	30.2	201	32	12.5

Port	Function	Port size		
		R5R06	**R5R08**	**R5R10**
B	Inlet pressure	¾" SAE61	1" SAE61	1¼" SAE61
A	Reduced outlet pressure	¾" SAE61	1" SAE61	1¼" SAE61
Y1	External drain	G¼"	G¼"	G¼"
X1	Pressure gauge	G¼"	G¼"	G¼"

* Please combine seal kit of one size with seal kit of Prop. section P2 for complete seal kit.

Seat valves series D5S are designed for directional control functions. They enable individual hydraulic solutions for nominal flow up to 800 l/min due to a large variety of poppets, springs and covers, including shuttle valves, stroke limiters, solenoid valves (VV01) and position control.

A complete program is offered under the Parker brand:

Subplate mounted valves	(Series D4S - chapter 6)
SAE flange valves	(Series D5S - chapter 9)
Pipe mounted valves	(Series D4S - chapter 10)
Slip-in cartridges	(Series CAR - on request)

Features

- Leak-free seat valve design
- 2- and 3-port bodies
- SAE61 flange
- Numerous pilot options
- 4 sizes, SAE ¾", 1", 1 ¼", 1 ½"
- 6 poppet types



D5S 2-port



D5S 3-port

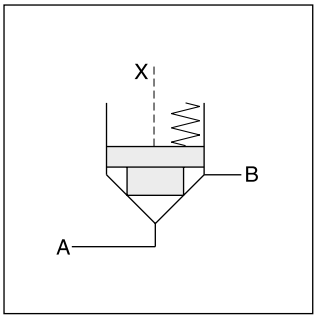

D5S 2-port

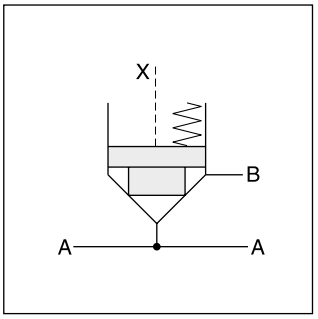

D5S 3-port

D5S 2-port

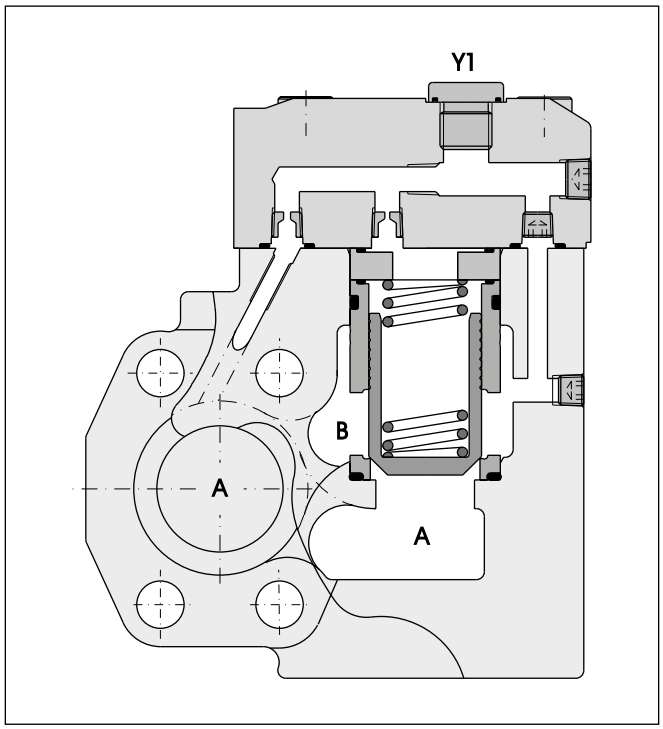

D5S 3-port

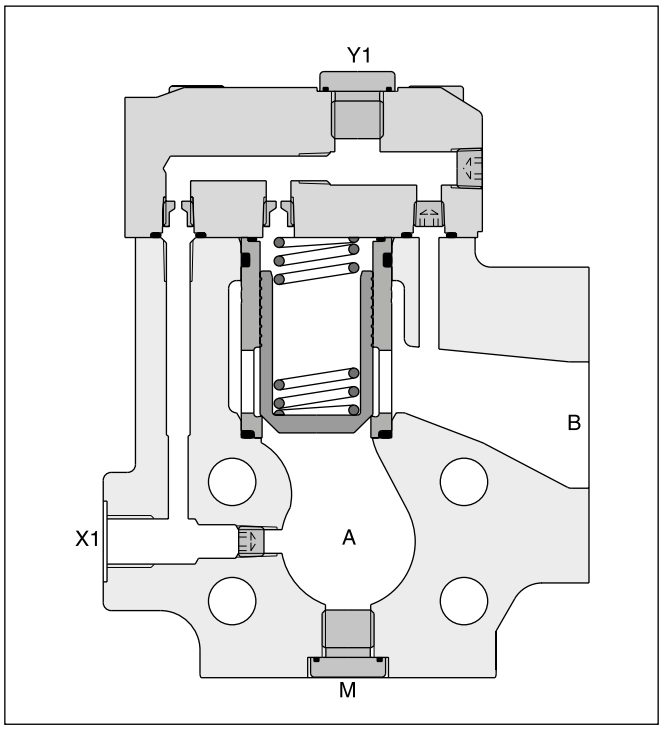

9

D5S		–									B		
Seat valve	**Nominal size**		**Body**	**Pilot body configuration**	**Pilot cap**	**Sleeve**	**Spool type**	**Spring**	**Switching type**	**Solenoid voltage**	**Design series**	**Seals**	**Options**

Code	Port size
06	SAE ¾"
08	SAE 1"
10	SAE 1¼"
12 [1]	SAE 1½"

Code	Body	Ports
5	3-port	Seat entry, A; X1, Y1, M = G¼"
7	2-port	Seat entry, A; X1, Y1 = G¼"
8	2-port	Annular entry, B; X1, Y1 = G¼"

Code	Pilot oil line in body
1	internal from A
2	internal from B
3	internal from A and B
4	external from X1
5	internal from B, external from X1

Code	Body	Ports	X	Y	Z	X-Y	X1	Y1	VV01
Standard									
1	2-/3-port	Pilot oil = pilot drain	⊖	●	⊖	○	—	●	—
2	2-/3-port	Pilot oil = pilot drain	●	⊖	⊖	○	—	●	—
3	2-port	Pilot oil = pilot drain	●	●	⊖	○	○	●	—
With solenoid valve (VV01)									
4	2-/3-port	Internal to B	⊖	○	⊖	●	—	●	○
5	2-port	Internal to B	●	○	⊖	●	○	●	○
6	2-/3-port	Ext. out of cap	⊖	○	⊖	●	—	○	●
7	2-port	Ext. out of cap	●	○	⊖	●	○	○	●
With stroke limiter (not for D5S06)									
A	2-/3-port	Pilot oil = pilot drain	⊖	●	⊖	—	●	—	—
B	2-/3-port	Pilot oil = pilot drain	●	⊖	—	—	●	—	—
C	2-port	Pilot oil = pilot drain	●	●	⊖	—	○	—	—

○ open bore ● closed bore ⊖ orifice Ø 1.2

Code	Sleeve
1	AA = 95 %, AB = 5 %
3	AA = 60 %, AB = 40 %

Code	Size	Poppet type	Sleeve
1	06, 08,10,12	With closed bottom and 15° chamfer (p_Z max. = p_A +20 bar)	1
2	06	With 0.8 dia. orifice at the bottom and 15°chamfer	1
	08, 10	With 1.2 dia. orifice at the bottom and 15°chamfer	1
4	06, 08,10,12	With closed bottom and 45° chamfer	1, 3
A [2]	08, 10, 12	Safety spool (for end position control only)	3
B [2]	08, 10, 12	Throttle spool, 10° chamfer	3
C [2]	08, 10, 12	Throttle spool, 3° chamfer	3

Code	Options
omit	Standard
013	Position control with protection

Code	Seals
1	NBR
5	FPM

Code	Solenoid voltage
omit	Standard w/o vent function
G0R	12 V=
G0Q	24 V=
GAR [4]	98 V=
GAG [4]	205 V=
W30	110 V / 50 Hz ; 120 V / 60 Hz
W31	230 V / 50 Hz ; 240 V / 60 Hz

Code	Switching type	
omit	Standard w/o vent function	
09	VV01 with manual override	de-energized: open
10	VV01 without manual override	
11	VV01 with manual override	de-energized: closed
12	VV01 without manual override	
CA	Shuttle valve	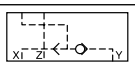
DA	Shuttle valve	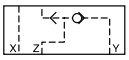
CB	VV01 code 09 and shuttle valve code CA	
CD	VV01 code 11 and shuttle valve code CA	
DB	VV01 code 09 and shuttle valve code DA	
DD	VV01 code 11 and shuttle valve code DA	
BH	VV01 code 10 and shuttle valve code CA and position control [3] with amplifier	
BK	VV01 code 12 and shuttle valve code CA and position control [3] with amplifier	
BN	VV01 code 10 and shuttle valve code DA and position control [3] with amplifier	
BQ	VV01 code 12 and shuttle valve code DA and position control [3] with amplifier	
BC	VV01 code 10 and position control [3] with amplifier	
BE	VV01 code 12 and position control [3] with amplifier	
BA	Position control [3] with amplifier	
BF	Position control [3] with amplifier and shuttle valve code CA	
BL	Position control [3] with amplifier and shuttle valve code DA	

Code	Spring (approx. cracking pressure [bar])					
	Sleeve Code 1		Sleeve Code 3			
	A -> B		A -> B		B -> A	
	D5S06	D5S08/12	D5S06	D5S08/12	D5S06	D5S08/12
1	2.8	3.5	6.5	6.5	9.5	11.0
2	0.5	0.5	1.0	1.0	1.5	1.7
3	0.3	0.3	0.6	0.6	0.9	1.0
4	2.2	2.2	4.0	3.5	5.5	6.0
5	—	9.0	—	16.0	—	28.0
6	1.2	1.2	2.0	2.2	3.0	3.8
7	3.0	—	8.0	—	12.0	—

Examples see end of chapter.

[1] D5S 3-port only.
[2] Springs 2, 3 and 6 only.
[3] Position control for D5S08/10 only. Spring 2 or 4. Spool A and sleeve 3.
[4] To be used in combination with rectifier plugs at 120 VAC / 230 VAC power supply.

Technical data

General						
Size			**06 (¾")**	**08 (1")**	**10 (1¼")**	**12 (1½")**
Mounting			Flanged according to SAE61			
Mounting position			unrestricted			
Ambient temperature		[°C]	-20...+60			
$MTTF_D$ value		[years]	150			
Weight	D5S 2-port	[kg]	3.6	4.1	5.4	—
	D5S 3-port	[kg]	3.4	4.4	5.0	7.8
Hydraulic						
Max. operating pressure		[bar]				
	SAE61 Ports A, B		350	350	280	210
	Port Y1		30	30	30	30
Nominal flow		[l/min]	180	360	600	800
Fluid			Hydraulic oil according to DIN 51524			
Fluid temperature		[°C]	-20...+70 (NBR: -25...+70)			
Viscosity	permitted	[cSt] / [mm^2/s]	20...400			
	recommended	[cSt] / [mm^2/s]	30...80			
Filtration			ISO 4406 (1999); 18/16/13			

Electrical (solenoid)							
Duty ratio			100 % ED; CAUTION: coil temperature up to 150 °C possible				
Protection class			IP65 in accordance with EN 60529 (with correctly mounted plug-in connector)				
Code			G0R	G0Q	GAR	GAG	W30	W31
Supply voltage		[V]	12 V =	24 V =	98 V =	205 V =	110 at 50 Hz 120 at 60 Hz	230 at 50 Hz 240 at 60 Hz
Tolerance supply voltage		[%]	±10	±10	±10	±10	±5	±5
Current consumption	hold	[A]	2.72	1.29	0.33	0.13	0.6 / 0.55	0.3 / 0.27
	in rush	[A]	2.72	1.29	0.33	0.13	2.5 / 2.4	1.25 / 1.2
Power consumption	hold	[W]	32.7	31	31.9	28.2	70 / 70 VA	70 / 70 VA
	in rush	[W]	32.7	31	31.9	28.2	280 / 290 VA	280 / 290 VA
Solenoid connection			Connector as per EN175301-803, solenoid identification as per ISO 9461					
Wiring min.		[mm2]	3 x 1.5 recommended					
Wiring length max.		[m]	50 recommended					

D5S pilot configuration

3-port	**2-port: seat entry**	**2-port: annular entry**	
standard			
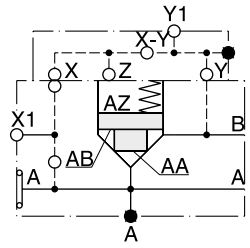	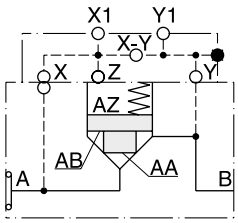	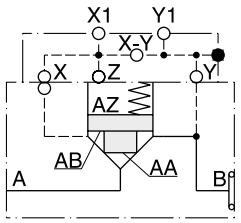	
with vent valve VV01			**VV01**
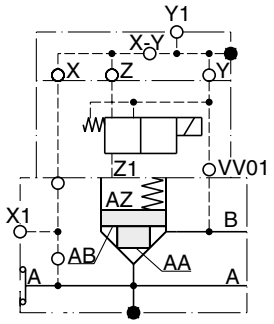	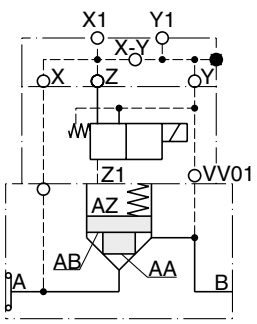	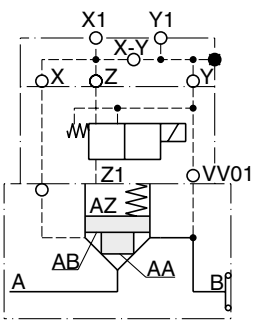	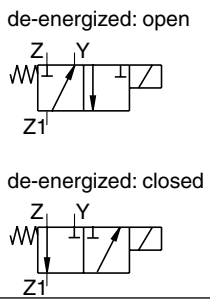

D5S 2-port

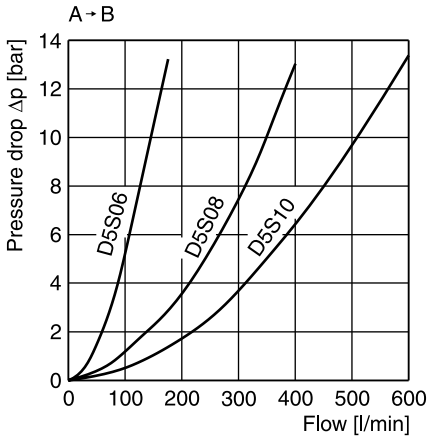

Leakage

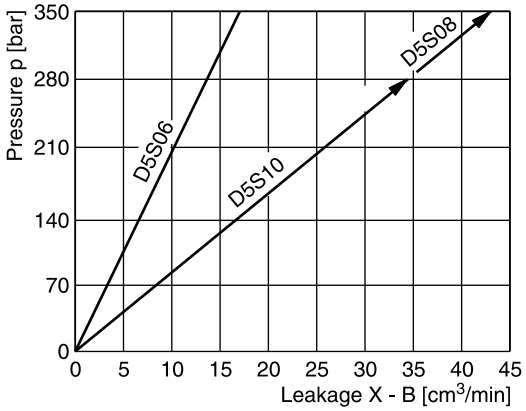

D5S 3-port

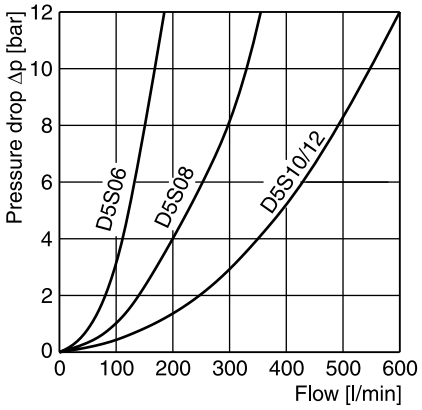

Leakage

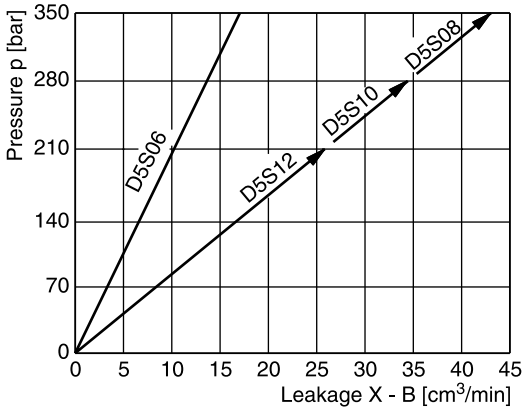

All characteristic curves measured with HLP46 at 50 °C.

9

Selection of cartridges

Sleeve 1, poppet 1	Sleeve 1, poppet 2	Sleeve 1, poppet 4	Sleeve 3, poppet 4	Sleeve 3, poppet A	Sleeve 3, poppet B/C
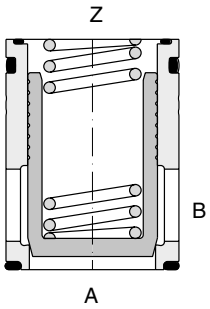	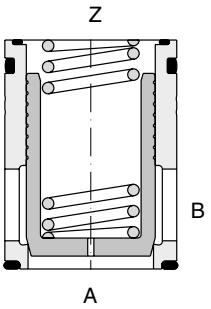	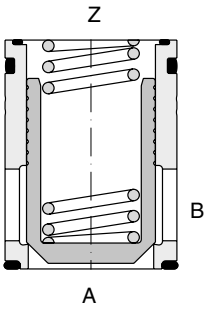	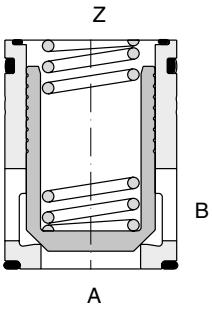	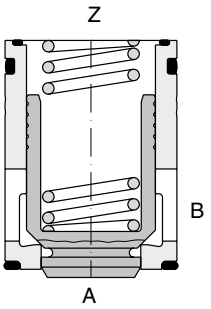	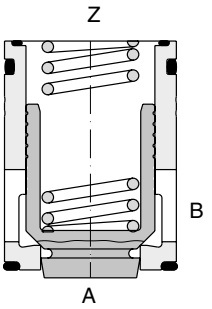
1 : 1.05 A_A = 0.95 A_C A_B = 0.05 A_C 15° chamfer	1 : 1.05 A_A = 0.95 A_C A_B = 0.05 A_C 15° chamfer orifice	1 : 1.05 A_A = 0.95 A_C A_B = 0.05 A_C 45° chamfer	1 : 1.67 A_A = 0.6 A_C A_B = 0.4 A_C 45° chamfer	1 : 1.67 A_A = 0.6 A_C A_B = 0.4 A_C 45° chamfer safety spool	1 : 1.67 A_A = 0.6 A_C A_B = 0.4 A_C 45° chamfer throttle spool

D5S 2-port

Seat entry

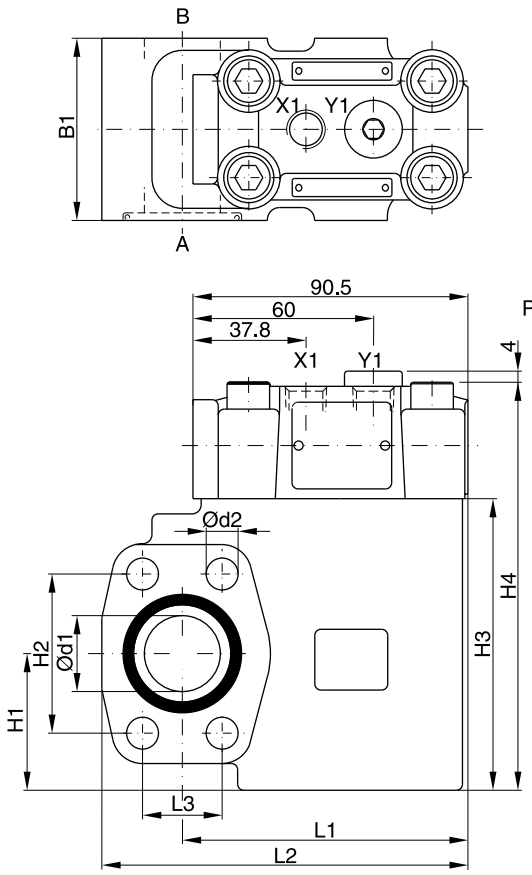

Annular entry

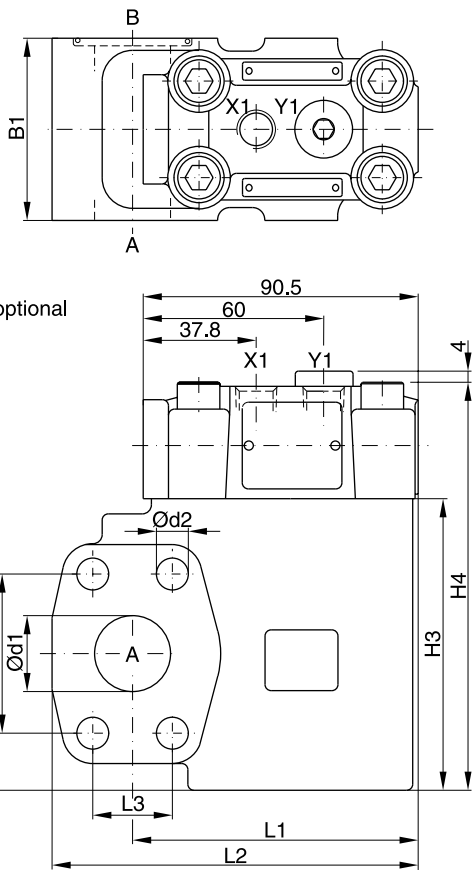

Ports X1 and Y1 optional

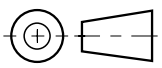

9

Seal kits		
NG	**NBR**	**FPM**
06	S16-91850-0	S16-91850-5
08	S16-91851-0	S16-91851-5
10	S16-91852-0	S16-91852-5

NG	l1	l2	l3	b1	h1	h2	h3	h4	d1	d2
06	77	101.0	22.2	60	37	47.6	90	127.6	19	10.5
08	94	120.5	26.2	60	45	52.4	96	133.6	25	10.5
10	94	128.0	30.2	75	48	58.7	109	146.6	32	12.5

Ports	Function	Port size		
		D5S06	D5S08	D5S10
A	Inlet or outlet	¾" SAE61	1" SAE61	1¼" SAE61
B	Outlet or inlet	¾" SAE61	1" SAE61	1¼" SAE61
X1	External pilot port	G¼"	G¼"	G¼"
Y1	External pilot drain	G¼"	G¼"	G¼"

D5S 3-port

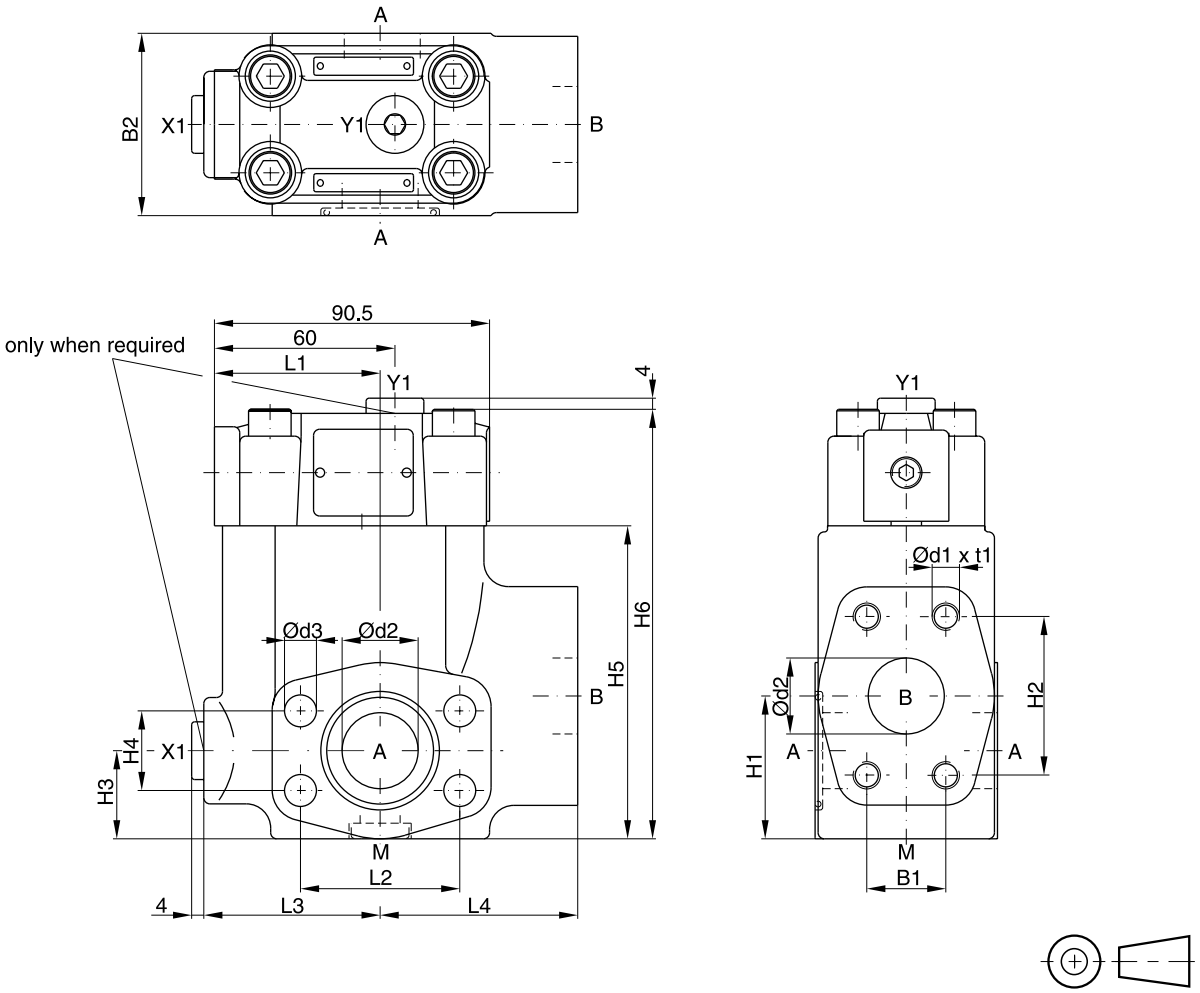

9

Seal kits		
NG	**NBR**	**FPM**
06	S16-91850-0	S16-91850-5
08	S16-91851-0	S16-91851-5
10	S16-91852-0	S16-91852-5
12	S26-27421-0	S26-27421-5

NG	l1	l2	l3	l4	b1	b2	h1	h2	h3	h4	h5	h6	d1	t1	d2	d3
06	49	47.6	56	63	22.2	60	41	47.6	29.5	22.2	82	119	3/8" UNC	20	19	10.5
08	55	52.4	58	65	26.2	60	47	52.4	30.5	26.2	103	141	3/8" UNC	23	25	10.5
10	57	58.7	64	61	30.2	75	65	58.7	37.5	30.2	113	150	7/16" UNC	22	30	12.5
12	37	69.8	55	93	35.7	80	73	69.8	72	35.7	140	178	1/2" UNC	27	38	13.5

Ports	Function	Port size			
		D5S06	**D5S08**	**D5S10**	**D5S12**
A (2x)	Inlet or outlet	¾" SAE61	1" SAE61	1¼" SAE61	1½" SAE61
B	Outlet or inlet	¾" SAE61	1" SAE61	1¼" SAE61	1½" SAE61
X1 [1)]	External pilot port	G¼"	G¼"	G¼"	G¼"
Y1	External pilot drain	G¼"	G¼"	G¼"	G¼"
M	Pressure gauge	G¼"	G¼"	G¼"	G¼"

[1)] Closed when supplied.

Example: pilot oil external from X1, pilot drain internal out of B

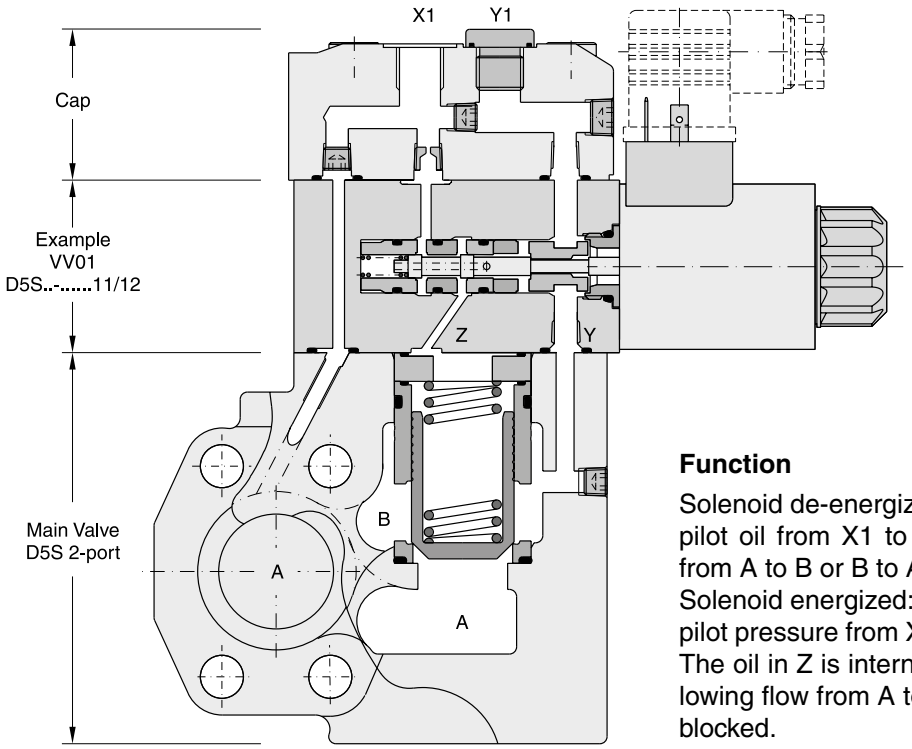

Function

Solenoid de-energized:
pilot oil from X1 to Z blocks the connection from A to B or B to A.
Solenoid energized:
pilot pressure from X1 is blocked in the VV01. The oil in Z is internally drained to port B. Allowing flow from A to B, while B to A remains blocked.

D5S with VV01 dimensions

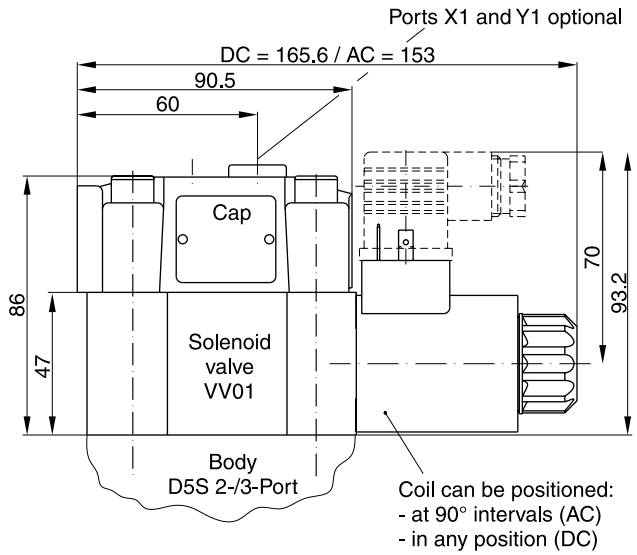

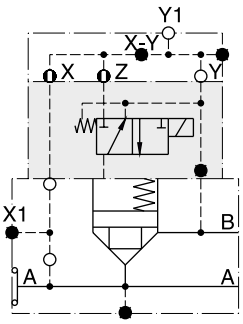

with manual override | without manual override

D5S..-.....09/10
Solenoid energized:
Blocked flow from A to B or B to A.
Solenoid de-energized:
Free flow from A to B or B to A.

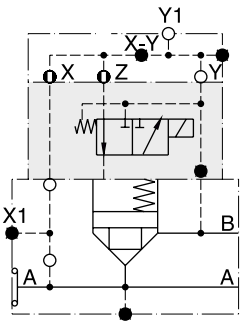

with manual override | without manual override

D5S..-.....11/12
Solenoid energized:
Free flow from A to B or B to A.
Solenoid de-energized:
Blocked flow from A to B or B to A.

Seal kits	
NBR	**FPM**
DC solenoid	
S56-40609-0	S56-40609-5
AC solenoid	
S26-35237-0	S26-35237-5

9

D5S with position control

Position control by proximity switch (incl. amplifier). Valve open: proximity switch activated. This proximity switch is pressure proof and has no wearing parts.

Note: Position control for D5S08 and D5S10 only.

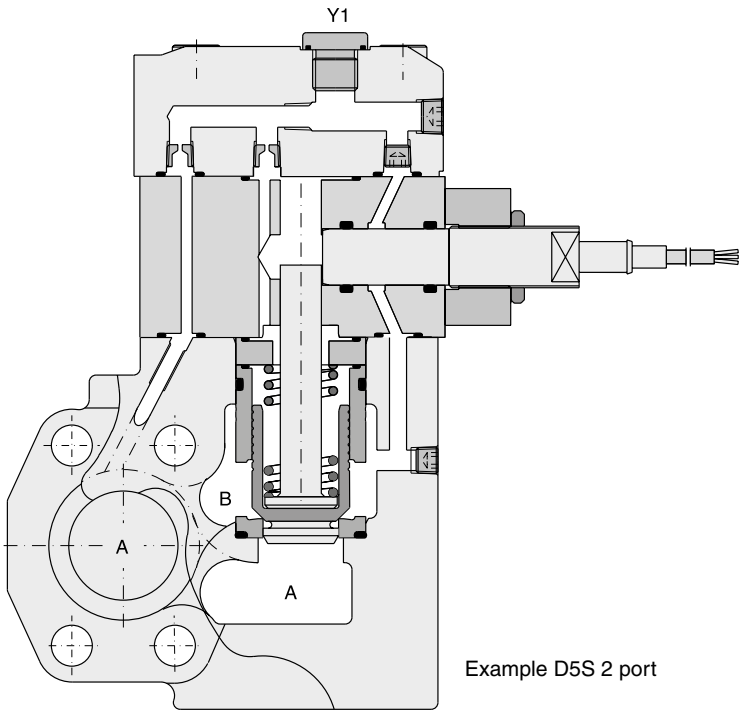

Example D5S 2 port

D5S with position control dimensions

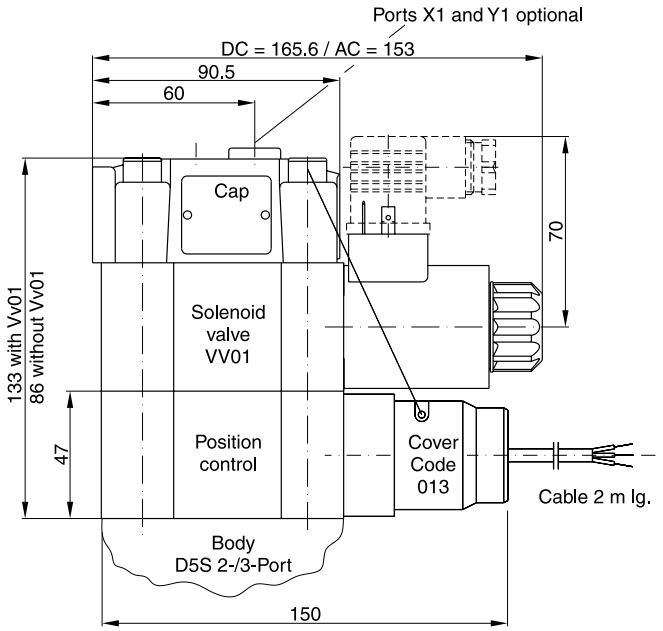

Technical data (proximity switch)

Function		PNP, contact
Supply voltage (Us)	[VDC]	10...30
Supply voltage ripple	[%]	≤ 10
Current consumption	[mA]	max. 8
Residual voltage L-signal	[V]	Us - 2.2 at I_{max}
Output current (I)	[mA]	≤ 200
Protection class		IP67
Ambient temperature	[C°]	-25...+70
Wire cross section	[mm²]	3 x 0.5

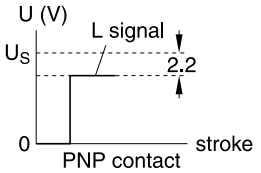

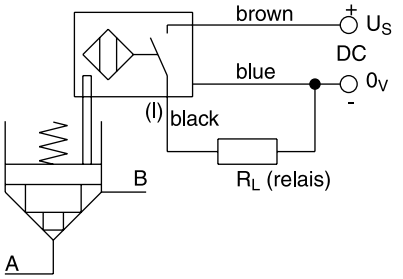

D5S stroke limiter

Example: D5S 3-port

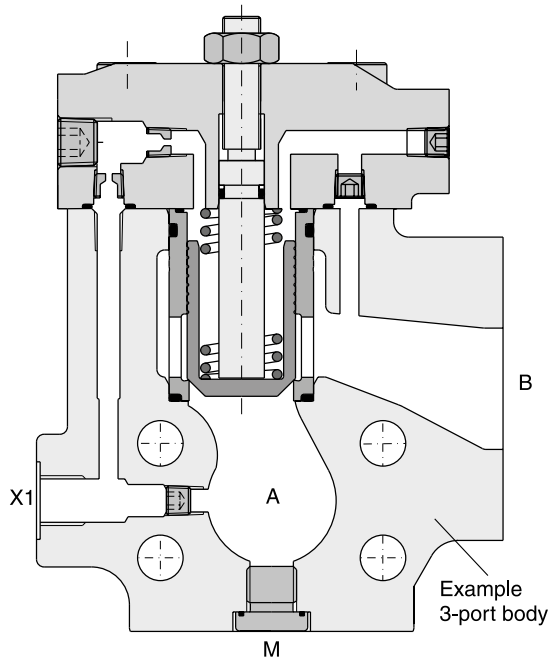

X1 = external pilot-oil (optional)

Note:

Stroke limiter not for use with D5S06, solenoid valve VV01, shuttle valve and position control.

D5S with shuttle valve

Dimensions

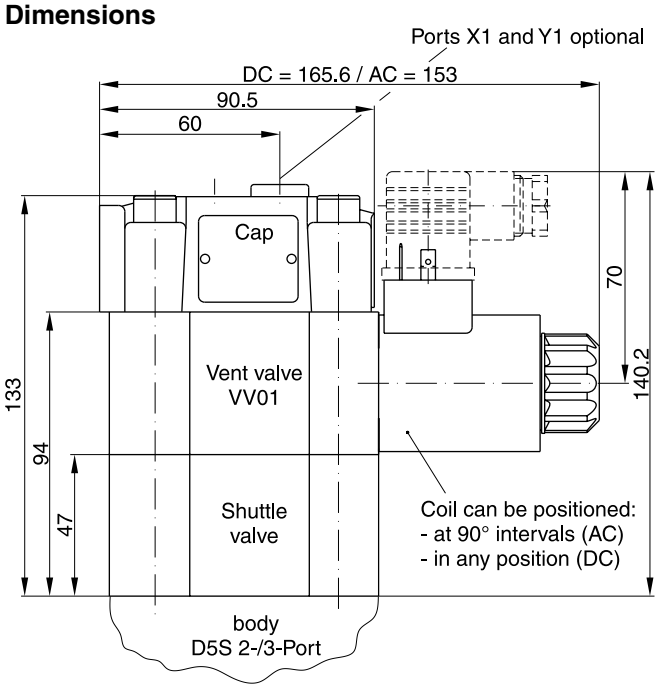

Shuttle valve only in connection with vent valve VV01.

Stroke limiter dimensions

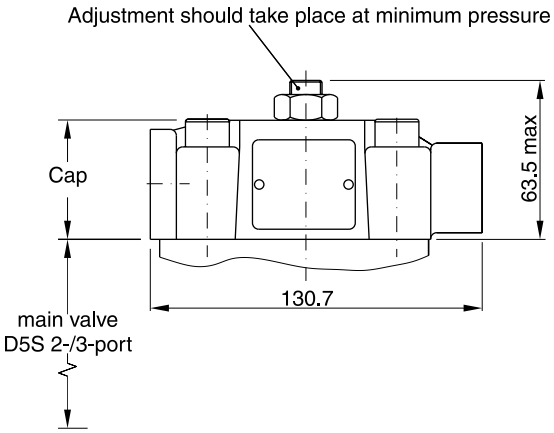

Example D5S 2-port:
D5S08-74C...
D5S10-74C...

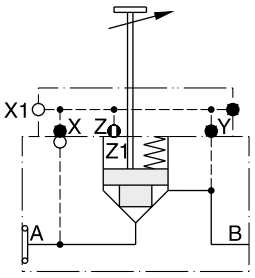

Example D5S 3-port:
D5S08-54A...
D5S10-54A...
D5S12-54A...

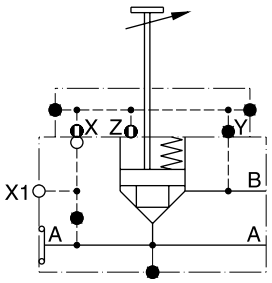

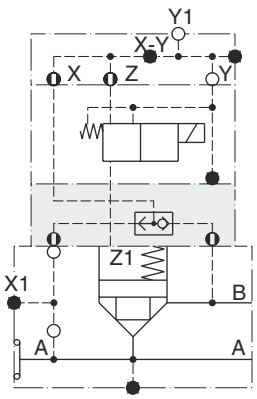

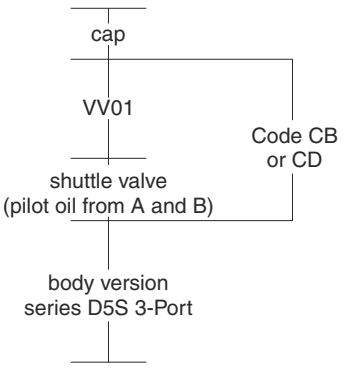

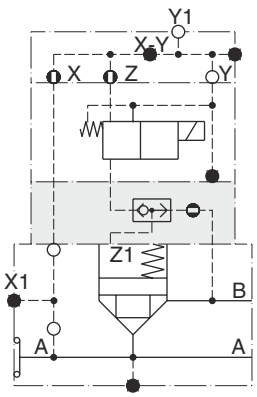

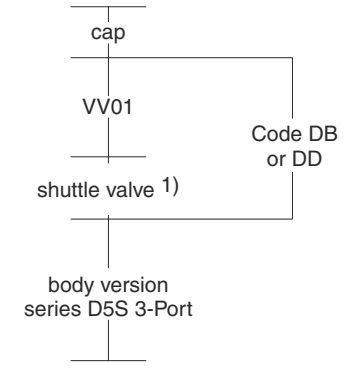

1) Pilot oil from A and B, from B to A check valve function

9

D5S 2-port

Seat entry

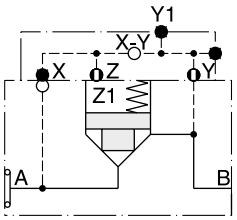

D5S..-722

Pilot oil: internal from B

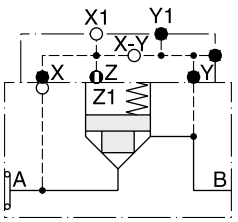

D5S..-743

Pilot oil: external from X1

Annular entry

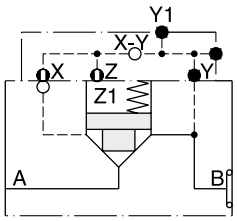

D5S..-821

Pilot oil: internal from B

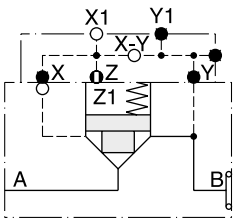

D5S..-843

Pilot oil: external from X1

Stroke limiter D5S 2-port

Seat entry

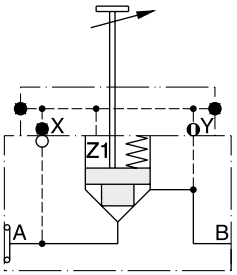

D5S08-72B
10
Pilot oil: internal from B

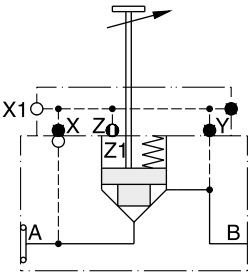

D5S08-74C
10
Pilot oil: external from X1

Annular entry

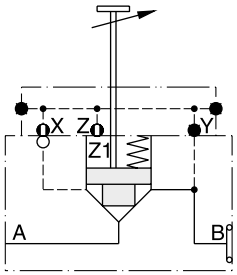

D5S08-82A
10
Pilot oil: internal from B

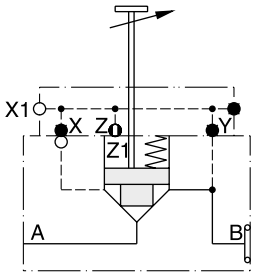

D5S08-84C
10
Pilot oil: external from X1

D5S 3-port

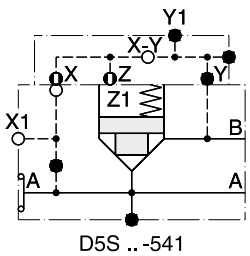

D5S .. -541

Pilot oil: external from X1

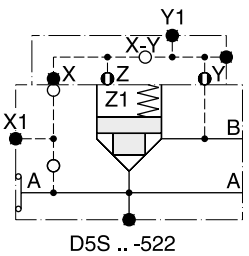

D5S .. -522

Pilot oil: internal from B

Stroke limiter D5S 3-port

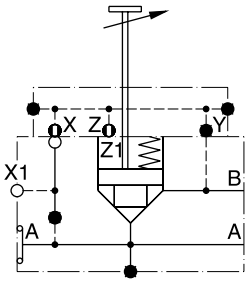

D5S08-54A
10
12
Pilot oil: external from X1

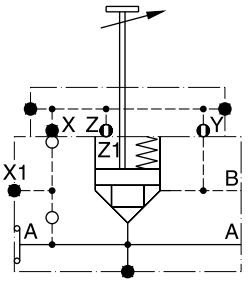

D5S08-52B
10
12
Pilot oil: internal from B

9

D5S 2-port with solenoid valve VV01

Seat entry

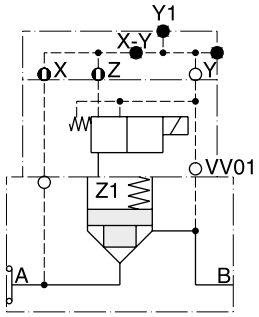

D5S..-714...09
10
11
12

Pilot oil: internal from A
Pilot drain: internal to B

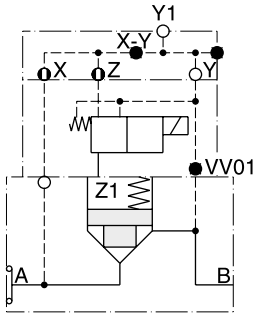

D5S..-716...09
10
11
12

Pilot oil: internal from A
Pilot drain: external out of Y1

Annular entry

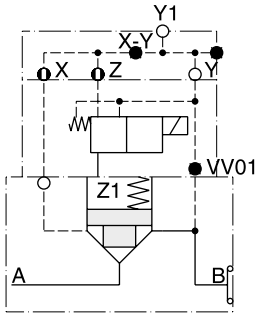

D5S..-826...09
10
11
12

Pilot oil: internal from B
Pilot drain: external out of Y1

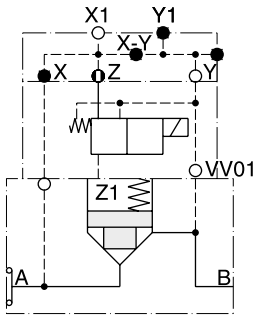

D5S..-745...09
10
11
12

Pilot oil: external from X1
Pilot drain: internal to B

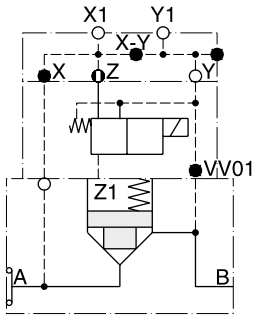

D5S..-747...09
10
11
12

Pilot oil: external from X1
Pilot drain: external out of Y1

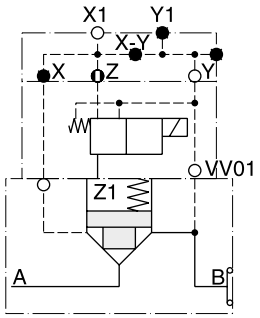

D5S..-845...09
10
11
12

Pilot oil: external from X1
Pilot drain: internal to B

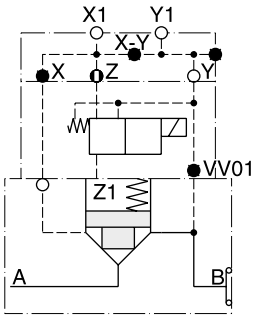

D5S..-847...09
10
11
12

Pilot oil: external from X1
Pilot drain: external out of Y1

9

D5S 2-port with with solenoid valve VV01 and shuttle valve

Seat entry

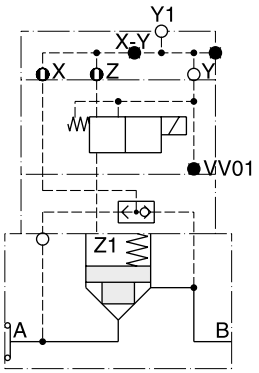

D5S..-736...CB
CD

Pilot oil: internal from A + internal from B
Pilot drain: external out of Y1

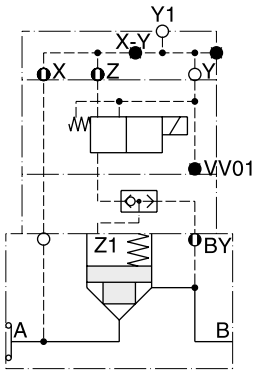

D5S..-736...DB
DD

Pilot oil: internal from A + internal from B
Pilot drain: external out of Y1

Annular entry

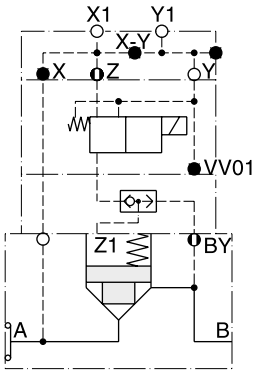

D5S..-757...DB
DD

Pilot oil: external from X1 + internal from B
Pilot drain: external out of Y1

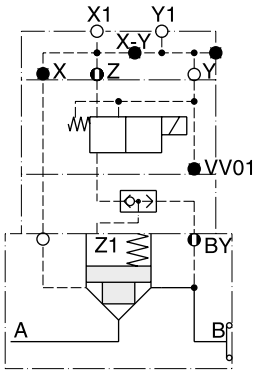

D5S..-857...DB
DD

Pilot oil: external from X1 + internal from B
Pilot drain: external out of Y1

D5S 3-port with solenoid valve VV01

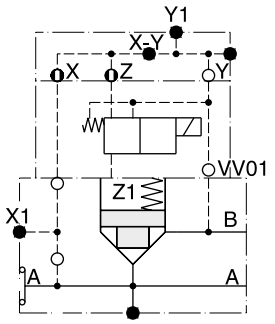

D5S .. -514...09
10
11
12
Pilot oil: internal from A
Pilot drain: internal to B

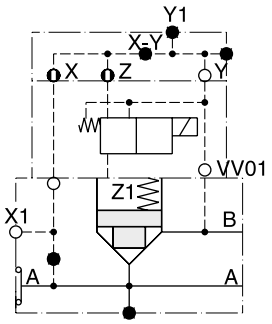

D5S .. -544...09
10
11
12
Pilot oil: external from X1
Pilot drain: internal to B

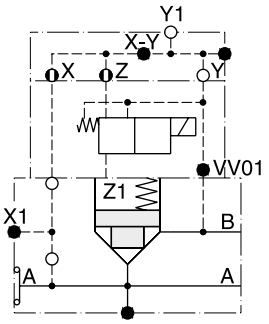

D5S .. -516...09
10
11
12
Pilot oil: internal from A
Pilot drain: external out of Y1

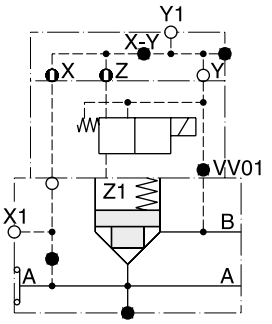

D5S .. -546...09
10
11
12
Pilot oil: external from X1
Pilot drain: external out of Y1

9

D5S 3-port with with solenoid valve VV01 and shuttle valve

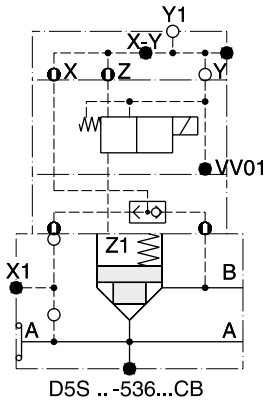

D5S .. -536...CB
CD
Pilot oil: internal from A +
internal from B
Pilot drain: external out of Y1

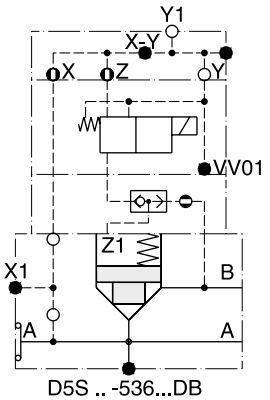

D5S .. -536...DB
DD
Pilot oil: internal from A +
internal from B
Pilot drain: external out of Y1

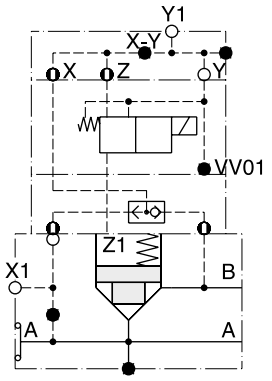

D5S .. -556...CB
CD
Pilot oil: internal from X1 +
internal from B
Pilot drain: external out of Y1

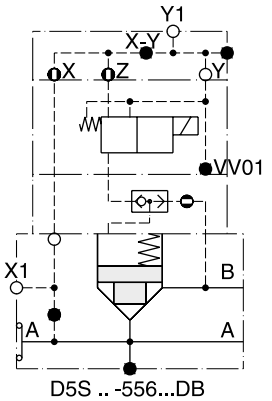

D5S .. -556...DB
DD
Pilot oil: external from X1 +
internal from B
Pilot drain: external out of Y1

D5S 2-port position control

Seat entry

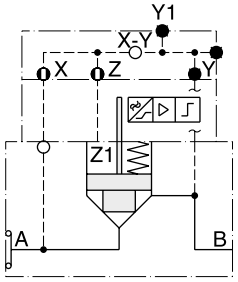

D5S08-7113A.BA
D5S10
Pilot oil: internal from A

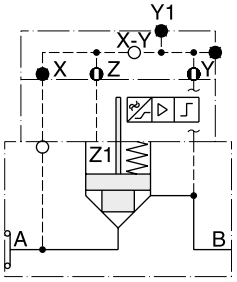

D5S08-7223A.BA
D5S10
Pilot oil: internal from B

Annular entry

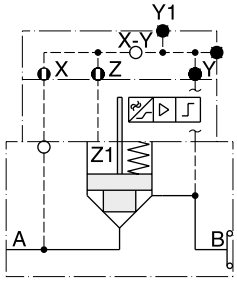

D5S08-8213A.BA
D5S10
Pilot oil: internal from B

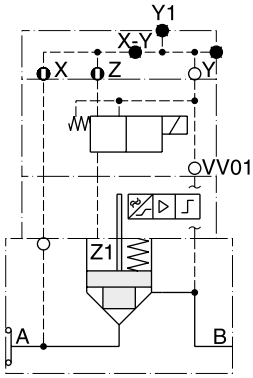

D5S08-7143A.BC
D5S10 BE
Pilot oil: internal from A
Pilot drain: internal to B

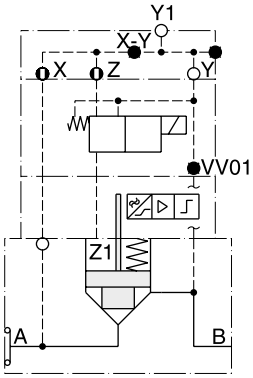

D5S08-7163A.BC
D5S10 BE
Pilot oil: internal from A
Pilot drain: external out of Y1

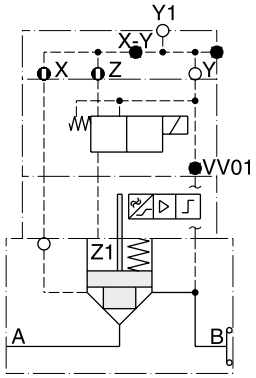

D5S08-8263A.BC
D5S10 BE
Pilot oil: internal from B
Pilot drain: external out of Y1

9

Seat entry

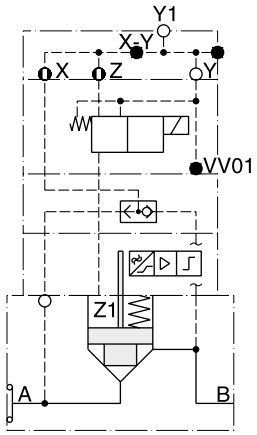

D5S..-736...BH
BK
Pilot oil: internal from A + internal from B
Pilot drain: external out of Y1

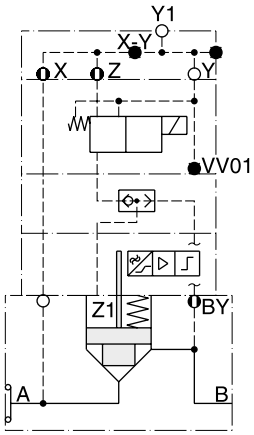

D5S..-736...BN
BQ
Pilot oil: internal from A + internal from B
Pilot drain: external out of Y1

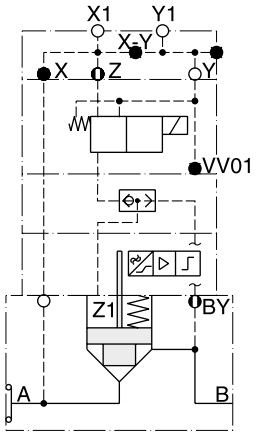

D5S..-757...BN
BQ
Pilot oil: external from X1 + internal from B
Pilot drain: external out of Y1

Annular entry

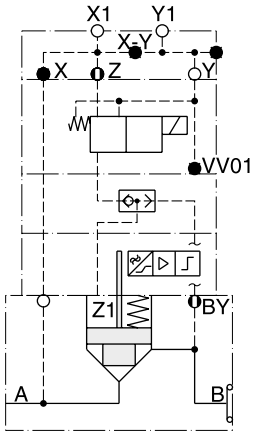

D5S..-857...BN
BQ
Pilot oil: external from X1 + internal from B
Pilot drain: external out of Y1

D5S 3-port position control

Seat entry

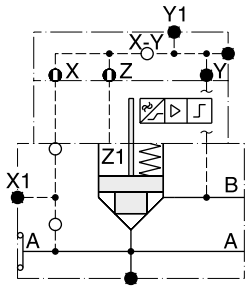

D5S08-5113A.BA
10
12
Pilot oil: internal from A

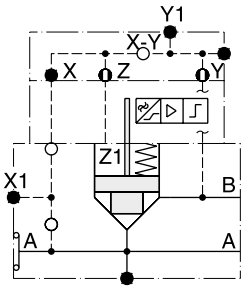

D5S08-5223A.BA
10
12
Pilot oil: internal from B

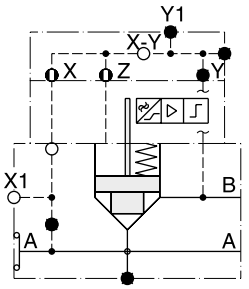

D5S08-5213A.BA
10
12
Pilot oil: external from X1

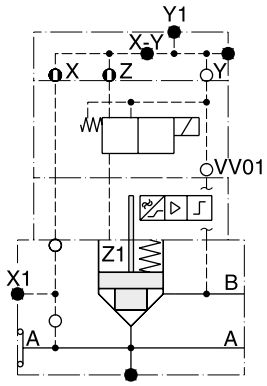

D5S08-5143A.BC
10 BE
12
Pilot oil: internal from A
Pilot drain: internal to B

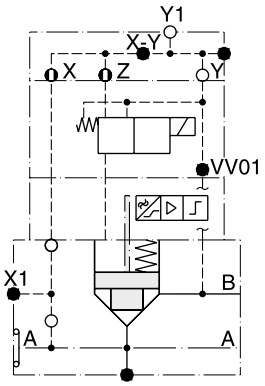

D5S08-5163A.BC
10 BE
12
Pilot oil: internal from A
Pilot drain: external out of Y1

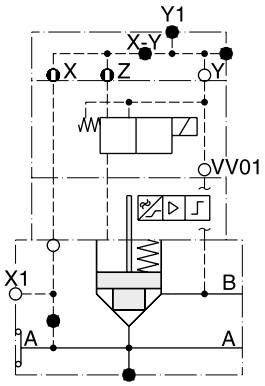

D5S08-5443A.BC
10 BE
12
Pilot oil: external from X1
Pilot drain: internal to B

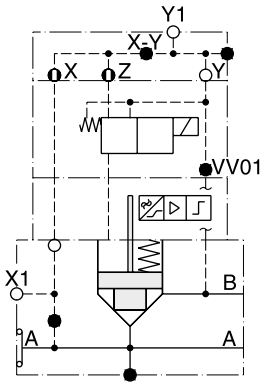

D5S08-5463A.BC
10 BE
12
Pilot oil: external from X1
Pilot drain: external out of Y1

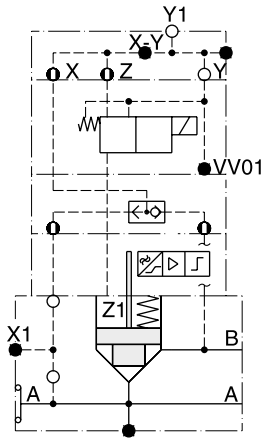

D5S08-5363A.BH
10 BK
12
Pilot oil: internal from A +
internal from B
Pilot drain: external out of Y1

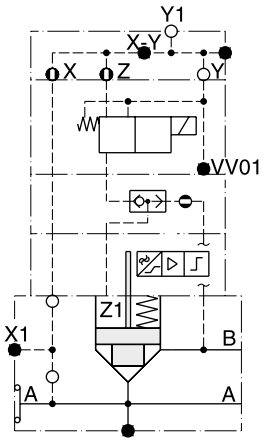

D5S08-5363A.BN
10 BQ
12
Pilot oil: internal from A +
internal from B
Pilot drain: external out of Y1

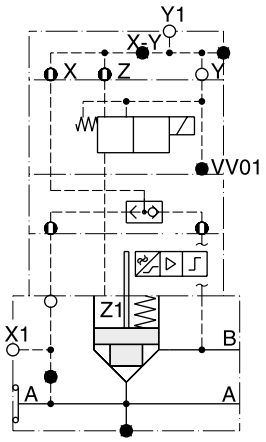

D5S08-5563A.BH
10 BK
12
Pilot oil: external from X1 +
internal from B
Pilot drain: external out of Y1

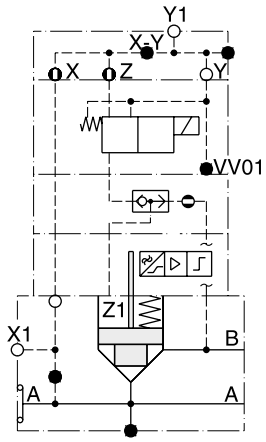

D5S08-5563A.BN
10 BQ
12
Pilot oil: external from X1 +
internal from B
Pilot drain: external out of Y1

9

Proportional throttle valves series F5C allow to adjust the flow in proportion to the input signal. The combination of the F5C with pressure compensators R5A or R5P serves as a flow control valve - providing load compensated flow.

The F5C is offered with two types of response time:

standard 350 ms at 1 l/min pilot flow

code A 250 ms at 2 l/min pilot flow



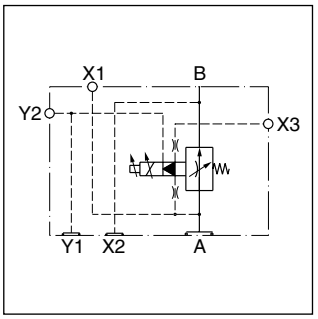

Features

- Spool type proportional throttle valve
- SAE61 flange
- Maximum flow 380 l/min
- 3 sizes, SAE 3/4“, 1“, 1 1/4“
- Load compensated flow in combination with R5A/R5P

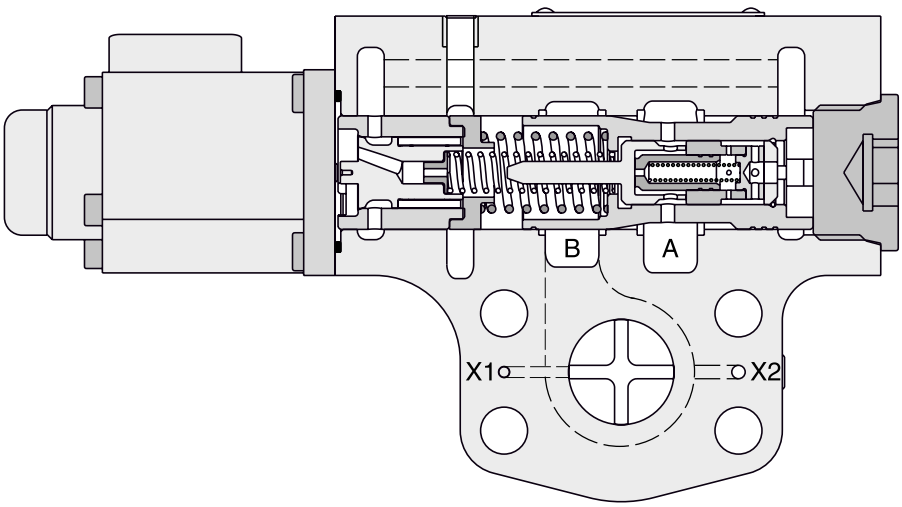

9

Ordering Code

F5C			4	3		X		0	C			
Proportional throttle valve	**Nominal size**	**Pilot flow and response**	**SAE61 interface**	**Pilot ports G¼"**	**Spool type**	**Proportional solenoid 16 V/1.05 A**	**Pilot connection**	**Accessories**	**Design**	**Seals**	**Design series** (not required for ordering)	**Options**

Code	Nominal size
06	SAE ¾"
08	SAE 1"
10	SAE 1¼"

Code	Pilot flow	Max. response
—	1 l/min	350 ms
A	2 l/min	250 ms

Spool type		
Code	Size	Max. flow [1]
B	06/08	45 l/min
1	06/08/10	95 l/min
2	08/10	190 l/min
3	10	380 l/min

Code	Seals
1	NBR
5	FPM

Code	Pilot connections	F5C without compensators R5A, R5P	F5C for combination with R5A	F5C for combination with R5P
2	internal PD (Y) internal PP (X)	—	—	X1, X3, Y2 ● X2, Y1 ○ X2, Y1 ○
3	external PD (Y) external PP (X)	—	X1, X3, Y2 ○ X2, Y1 ⊗	—
4	external PD (Y) external PP (X)	X3, Y2 ○ X1 ● X2, Y1 ⊗	—	X2, X3, Y1, Y2 ○ X1 ●
5	external PD (Y) internal PP (X)	—	X1, Y2 ○ X3 ● X2, Y1 ⊗	—
6	external PD (Y) internal PP (X)	X1, X3 ● X2, Y1 ⊗ Y2 ○	—	X1, X3 ● X2, Y1, Y2 ○

9

Pilot connection explanation

F5C mit R5A

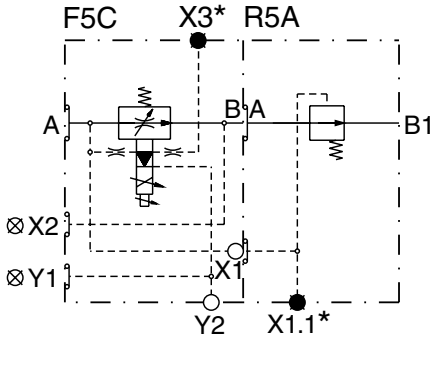

F5C mit R5P

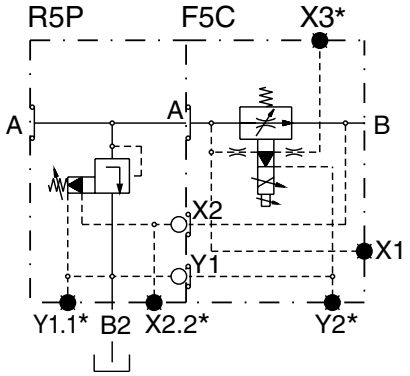

○ open ● closed ⊗ closed by counterpart

[1] At nominal pressure drop (Δp = 8.4 bar).

* optional

Technical data

General				
Size		**06 (¾")**	**08 (1")**	**10 (1¼")**
Mounting		Flanged according to SAE61		
Mounting position		unrestricted		
Ambient temperature	[°C]	-20...+60		
Weight	[kg]	3.9	4.1	5.8
Hydraulic				
Max. operating pressure				
Ports A, B, X1, X2, X3	[bar]	350	300	280
Ports Y1, Y2	[bar]	70		
Max. pressure drop (from A to B)	[bar]	21		
Nominal flow	[l/min]	95	190	380
Fluid		Hydraulic oil according to DIN 51524		
Fluid temperature	[°C]	-20...+70 (NBR: -25...+70)		
Viscosity permitted	[cSt] / [mm²/s]	20...400		
Viscosity recommended	[cSt] / [mm²/s]	30...80		
Filtration		ISO 4406 (1999); 18/16/13		
Electrical characteristics				
Duty ratio		100 % ED; CAUTION: coil temperature up to 150 °C possible		
Solenoid connection		Connector as per EN175301-803, solenoid identification as per ISO 9461		
Protection class		IP65 in accordance with EN 60529 (with correctly mounted plug-in connector)		
Supply voltage	[V]	16		
Current consumption	[A]	1.05		
Resistance	[Ohm]	11.3		
Response time	[ms]	see ordering code		

Characteristic curves

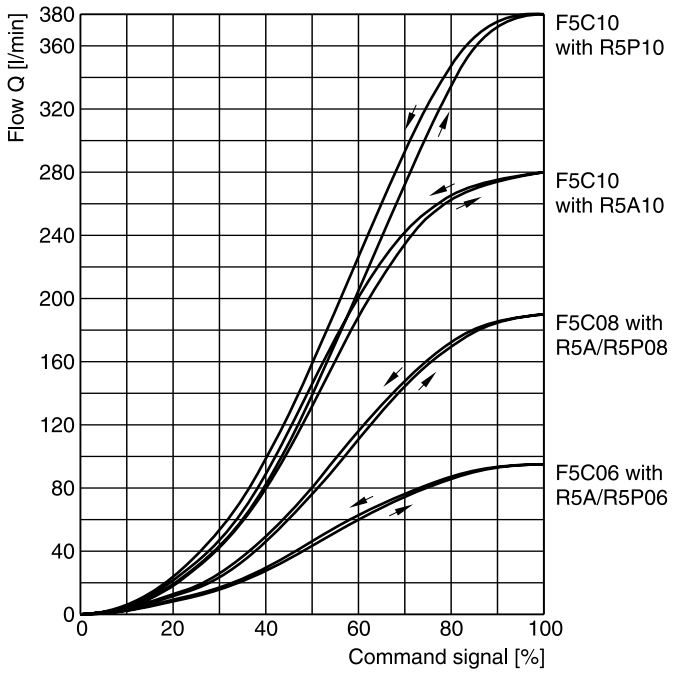

All characteristic curves measured with HLP46 at 50 °C.

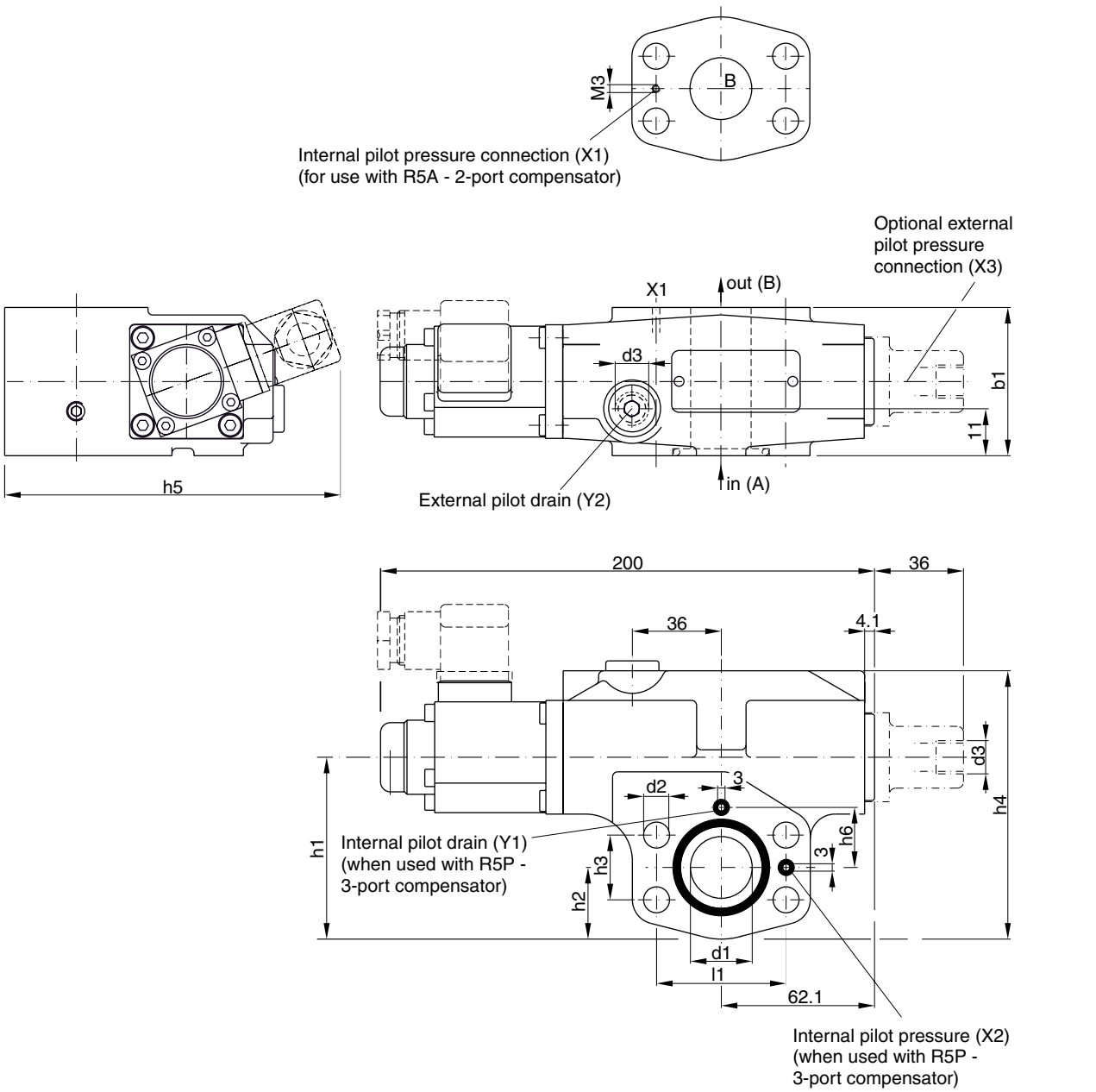

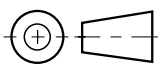

Seal kits		
NG	**NBR**	**FPM**
06 / 08 / 10	S26-58484-0	S26-58484-5

	l1	b1	h1	h2	h3	h4	h5	h6	d1	d2	d3
F5C06	47.6	60	68.2	26	22.2	103.2	183	20.8	19	10.5	G¼"
F5C08	52.4	60	73.6	29	26.2	108.6	187	24.3	25	10.5	G¼"
F5C10	58.7	75	83.5	36.5	30.2	118.5	198	29.3	32	12.5	G¼"

Direct operated 2-way pressure compensators series R5A can be combined with any type of fixed or adjustable flow resistor (throttle) to provide a load compensated flow.

The combination with the proportional throttle valve F5C serves as a compact 2-way flow control unit in SAE flange design. The R5A is typically used as meter-out compensator behind the flow resistor.



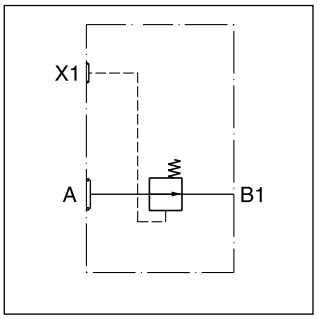

Features

- Seated type 2-way pressure compensator
- SAE61 flange
- 8.4 bar control pressure
- 3 sizes, SAE 3/4“, 1“, 1 1/4“
- Load compensated flow in combination with F5C

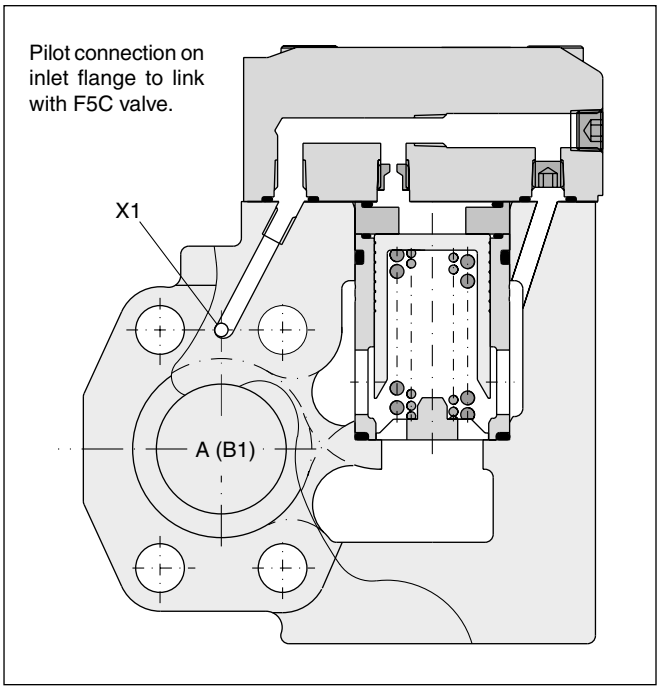

Ordering code

R5A		–		4	1	01	B		
2-port compensator	Nominal size		SAE61 interface	2-port body	Plain cap	Pilot connection thru port X1	Design series	Seals	Options

Code	Nominal size
06	SAE ¾"
08	SAE 1"
10	SAE 1¼"

Code	Seals
1	NBR
5	FPM

SAE 61 interface		
Code	Size	Max. pressure [bar]
4	10	280
5	06/08	350

Technical data

General				
Size		**06 (¾")**	**08 (1")**	**10 (1¼")**
Mounting		Flanged according to SAE61		
Mounting position		unrestricted		
Ambient temperature	[°C]	-20...+60		
$MTTF_D$ value	[years]	150		
Weight	[kg]	3.6	4.3	5.6
Hydraulic				
Max. operating pressure Ports A, B, X1	[bar]	350	350	280
Control pressure	[bar]	8.4		
Nominal flow	[l/min]	90	300	600
Fluid		Hydraulic oil according to DIN 51524		
Fluid temperature	[°C]	-20...+70 (NBR: -25...+70)		
Viscosity, permitted	[cSt] / [mm^2/s]	20...400		
recommended	[cSt] / [mm^2/s]	30...80		
Filtration		ISO 4406 (1999); 18/16/13		

Dimensions

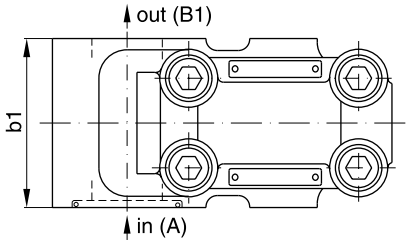

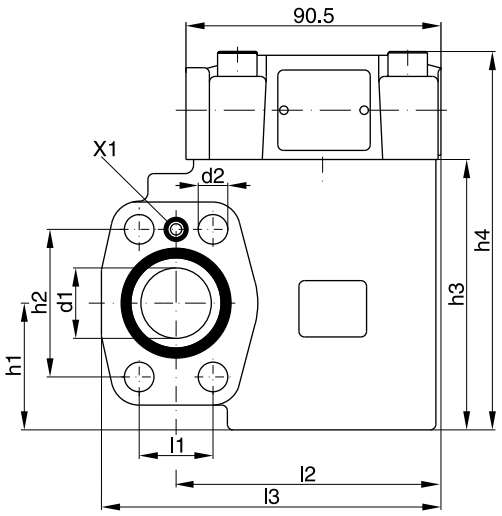

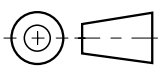

Seal kits		
NG	**NBR**	**FPM**
06	S16-91458-0	S16-91458-5
08	S16-91457-0	S16-91457-5
10	S16-91456-0	S16-91456-5

	l1	**l2**	**l3**	**b1**	**h1**	**h2**	**h3**	**h4**	**d1**	**d2**
R5A06	22.2	77	101	60	37	47.6	90	128	19	10.5
R5A08	26.2	94	120.5	60	45	52.4	96	134	25	10.5
R5A10	30.2	94	128	75	48	58.7	109	147	32	12.5

Direct operated 3-way pressure compensators series R5P can be combined with any type of fixed or adjustable flow resistor (throttle) to provide a load compensated flow.

The combination with the proportional throttle valve F5C serves as a compact 3-way flow control unit in SAE flange design. The R5P is typically used as meter-in compensator in front of the flow resistor.

The R5P is additionally equipped with a pressure relief pilot, that controls the compensator cartridge and operates as system pressure relief valve. The R5P*P2 provides a proportional relief function.



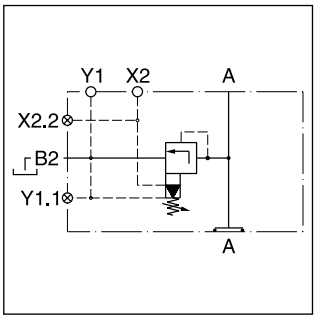

Features

- Seated type 3-way pressure compensator
- SAE61 flange
- 8.4 bar control pressure
- Pressure relief function (optionally proportional)
- With optional vent function
- 3 sizes, SAE 3/4“, 1“, 1 1/4“
- Load compensated flow in combination with F5C

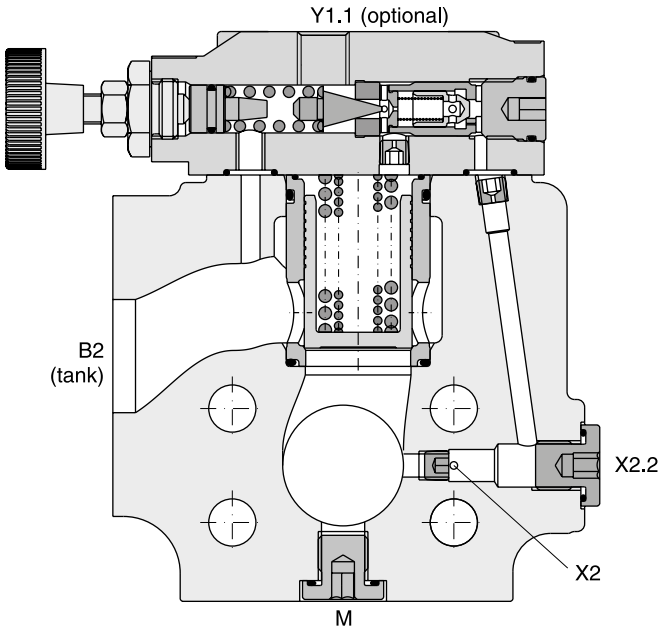

R5P

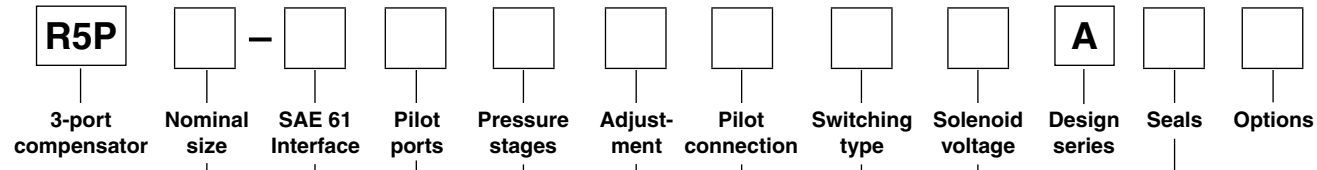

Code	Port size
06	SAE ¾"
08	SAE 1"
10	SAE 1¼"

SAE61 interface		
Code	Size	Max. pressure [bar]
4	10	280
5	06/08	350

Code	Pilot ports	Port Y1 [1]
9	G¼"	plugged
P		open

Code	Pressure stages
1	7...105 bar
3	7...210 bar
5 [2]	7...350 bar

Code	Adjustment
1	Hand knob
3	Acorn nut with lead seal

Code	Seals [6]
1	NBR
5	FPM

Code	Solenoid voltage
omit	Standard w/o vent function
G0R	12 V=
G0Q	24 V=
GAR [5]	98 V=
GAG [5]	205 V=
W30	110 V / 50 Hz 120 V / 60 Hz
W31	230 V / 50 Hz 240 V / 60 Hz

Code	Switching type
omit	Standard w/o vent function
09	Solenoid not activated unpressure circulation
11	Solenoid activated unpressure circulation

Code	Pilot connection
2	internal PD internal PP [4]
6	external PD [3] internal PP [4]

[1] Y1 port is used in combination with F5C, when the F5C should be drained through the R5P (internal or external drain).
[2] R5P10-4*5 up to 280 bar.
[3] Through port Y1.1.
[4] PP through port X1 in outlet flange.
[5] To be used in combination with rectifier plugs at 120 VAC/230 VAC power supply.
[6] Further seals on request.

R5P*P2

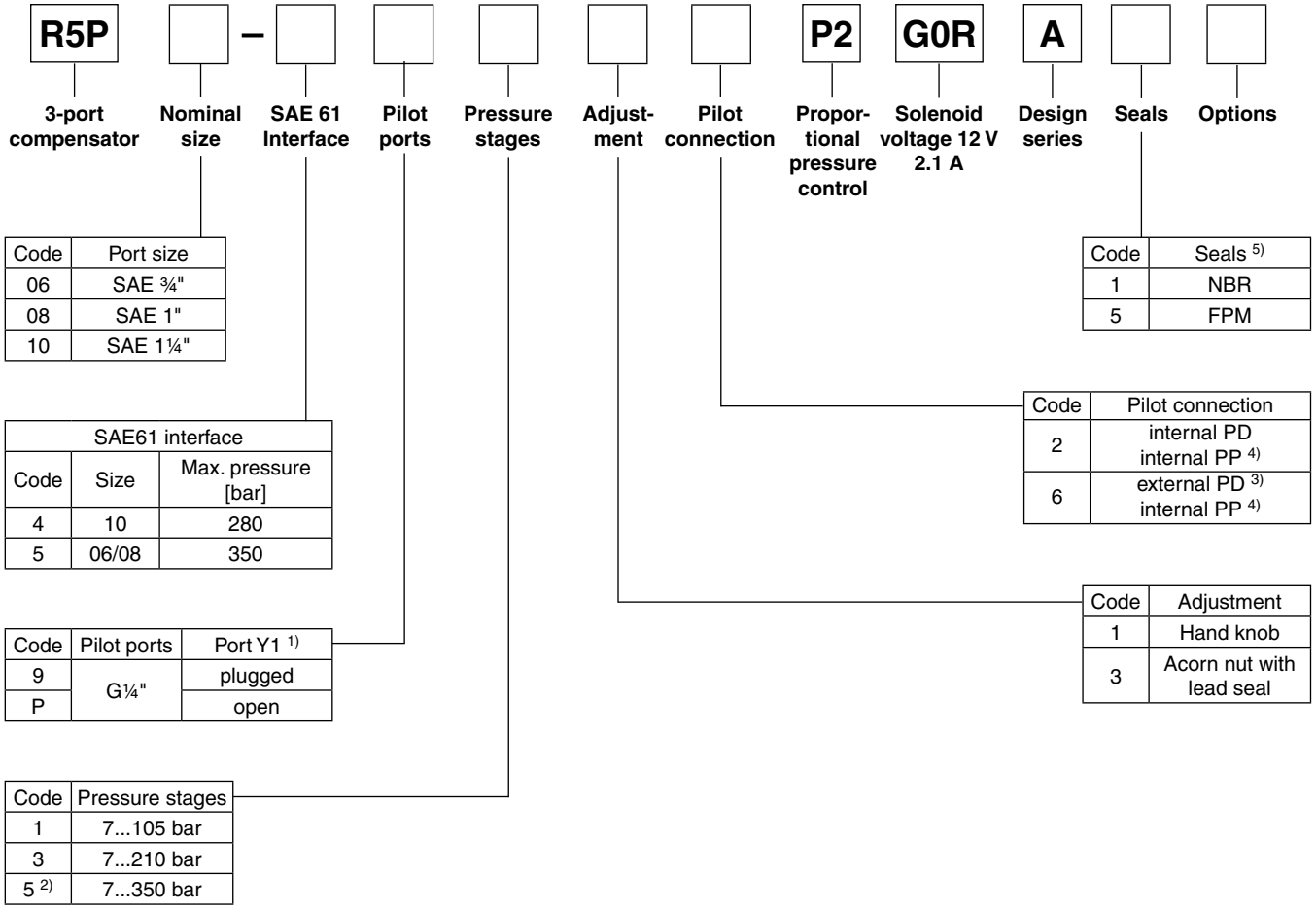

Code	Port size
06	SAE ¾"
08	SAE 1"
10	SAE 1¼"

Code	Seals [5]
1	NBR
5	FPM

SAE61 interface		
Code	Size	Max. pressure [bar]
4	10	280
5	06/08	350

Code	Pilot connection
2	internal PD internal PP [4]
6	external PD [3] internal PP [4]

Code	Pilot ports	Port Y1 [1]
9	G¼"	plugged
P		open

Code	Adjustment
1	Hand knob
3	Acorn nut with lead seal

Code	Pressure stages
1	7...105 bar
3	7...210 bar
5 [2]	7...350 bar

9

[1] Y1 port is used in combination with F5C, when the F5C should be drained through the R5P (internal or external drain).
[2] R5P10-4*5 up to 280 bar.
[3] Through port Y1.1.
[4] PP through port X1 in outlet flange.
[5] Further seals on request.

R5P

General							
Size				**06 (¾")**	**08 (1")**	**10 (1¼")**	
Mounting				Flanged according to SAE61			
Mounting position				unrestricted			
Ambient temperature			[°C]	-20...+60			
$MTTF_D$ value			[years]	150			
Weight	R5P		[kg]	3.7	4.4	5.3	
	R5P with VV01		[kg]	5.4	6.1	7.0	
Hydraulic							
Max. operating pressure		Ports A, B	[bar]	350	350	280	
Pressure stages			[bar]	105, 210, 350			
Nominal flow			[l/min]	90	300	600	
Fluid				Hydraulic oil according to DIN 51524			
Fluid temperature			[°C]	-20...+70 (NBR: -25...+70)			
Viscosity	permitted		[cSt] / [mm^2/s]	20...400			
	recommended		[cSt] / [mm^2/s]	30...80			
Filtration				ISO 4406 (1999); 18/16/13			
Electrical (solenoid) R5P with VV01							
Duty ratio				100 % ED; CAUTION: coil temperature up to 150 °C possible			
Protection class				IP65 in accordance with EN 60529 (with correctly mounted plug-in connector)			
			Code	G0R	G0Q	GAR	GAG	W30	W31
Supply voltage			[V]	12 V =	24 V =	98 V =	205 V =	110 at 50 Hz 120 at 60 Hz	230 at 50 Hz 240 at 60 Hz
Tolerance supply voltage			[%]	±10	±10	±10	±10	±5	±5
Current consumption	hold		[A]	2.72	1.29	0.33	0.13	0.6 / 0.55	0.3 / 0.27
	in rush		[A]	2.72	1.29	0.33	0.13	2.5 / 2.4	1.25 / 1.2
Power consumption	hold		[W]	32.7	31	31.9	28.2	70 / 70 VA	70 / 70 VA
	in rush		[W]	32.7	31	31.9	28.2	280 / 290 VA	280 / 290 VA
Solenoid connection				Connector as per EN175301-803, solenoid identification as per ISO 9461					
Wiring min.			[mm^2]	3 x 1.5 recommended					
Wiring length max.			[m]	50 recommended					

R5P*P2

General						
Size				**06 (¾")**	**08 (1")**	**10 (1¼")**
Mounting				Flanged according to SAE61		
Mounting position				unrestricted		
Ambient temperature			[°C]	-20...+60		
$MTTF_D$ value			[years]	75		
Weight			[kg]	5.5	6.2	7.1
Hydraulic						
Max. operating pressure		Ports A, B	[bar]	350	350	280
Pressure stages			[bar]	105, 210, 350		
Nominal flow			[l/min]	90	300	600
Fluid				Hydraulic oil according to DIN 51524		
Fluid temperature			[°C]	-20...+70 (NBR: -25...+70)		
Viscosity	permitted		[cSt] / [mm^2/s]	20...400		
	recommended		[cSt] / [mm^2/s]	30...80		
Filtration				ISO 4406 (1999); 18/16/13		
Electrical (proportional solenoid)						
Duty ratio				100 % ED; CAUTION: coil temperature up to 150 °C possible		
Protection class				IP65 in accordance with EN 60529 (with correctly mounted plug-in connector)		
Code				G0R		
Supply voltage			[V]	12 V =		
Max. current			[A]	2.1		
Coil resistance at 20 °C			[Ohm]	4.28		
Solenoid connection				Connector as per EN 175301-803		
Power amplifier, recommended				PCD00A-400		

R5P

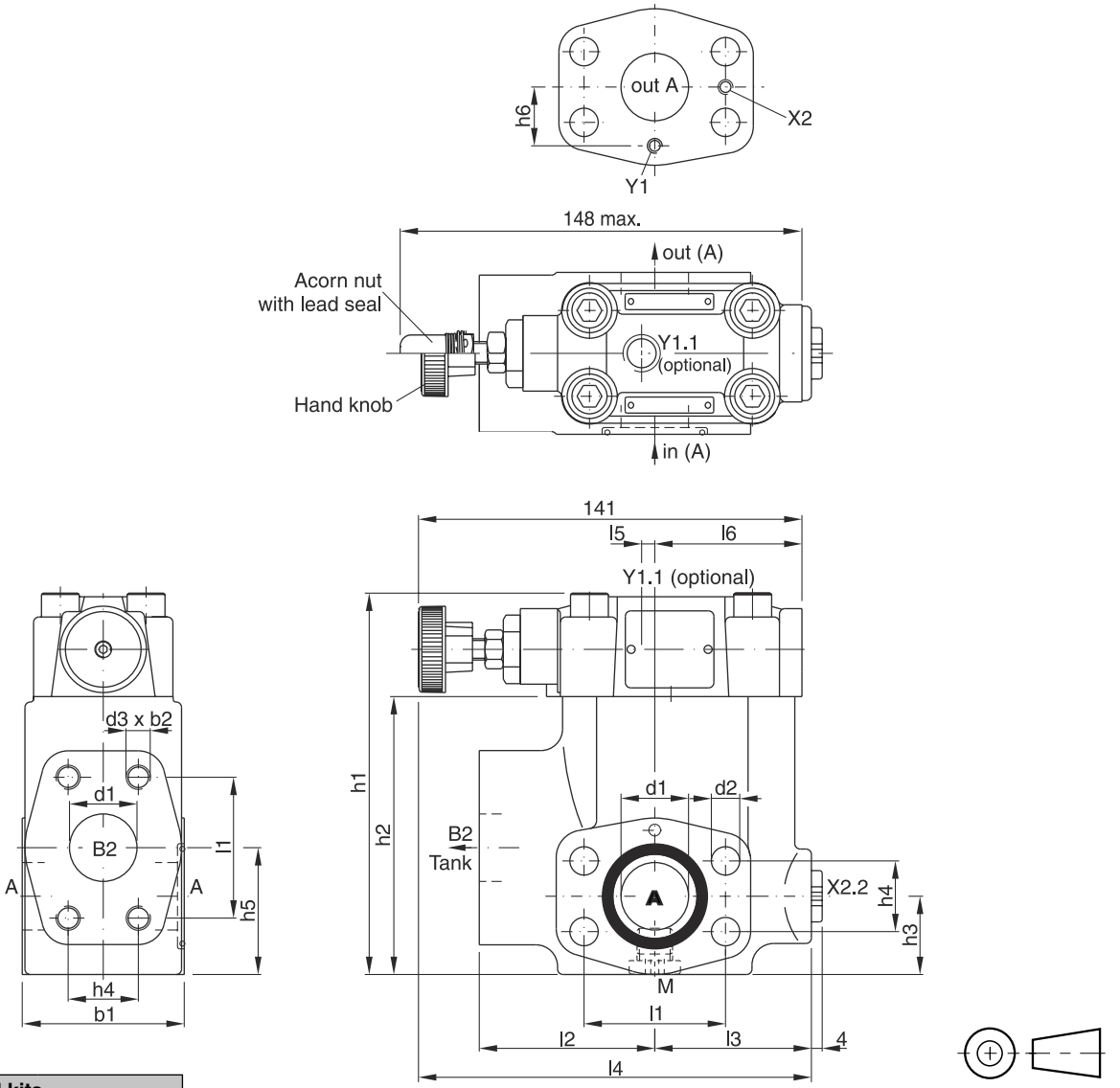

Seal kits		
NG	**NBR**	**FPM**
06	S16-91461-0	S16-91461-5
08	S16-91460-0	S16-91460-5
10	S16-91459-0	S16-91459-5

	l1	l2	l3	l4	l5	l6	b1	b2	h1	h2	h3	h4	h5	h6	d1	d2	d3
R5P06	47.6	63	56	148	1	49	60	20	119	81.6	29.5	22.2	41.6	20.8	19	10.5	3/8" UNC
R5P08	52.4	65	58	144.6	5	54.5	60	23	142	103	30.5	26.2	48.6	24.3	25	10.5	3/8" UNC
R5P10	58.7	61	64	146.6	3	56.5	75	22	149	113	37.5	30.2	64.1	29.3	32	12.5	7/16" UNC

Ports

Port	Function	Port size		
		R5P06	**R5P08**	**R5P10**
A	Inlet/outlet	¾"	1"	1¼"
B2	Tank	¾"	1"	1¼"
X2	Internal pilot pressure	M3	M3	M3
X2.2	External pilot pressure	G¼"	G¼"	G¼"
Y1	Internal pilot drain	M3	M3	M3
Y1.1	External pilot drain	G¼"	G¼"	G¼"
M	Pressure gauge	G¼"	G¼"	G¼"

R5P*P2

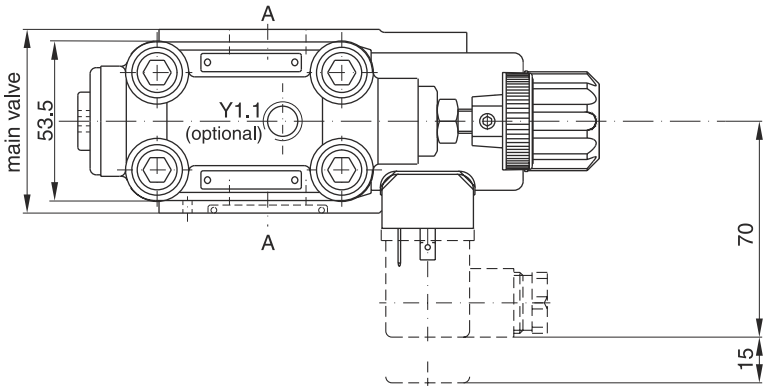

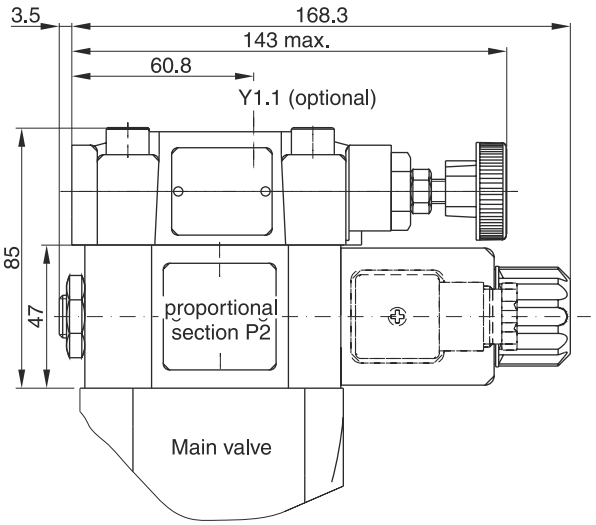

Drain line only external from the pilot head (Y1.1).

The pilot drain port must be connected to a stable low pressure tank line. Pressure variations in the drain port should be avoided.

	Kit	
	NBR	**FPM**
Prop. section P2	S26-58473-0	S26-58473-5

Note:

On initial start up and after long shut down periods bleed air from this plug.

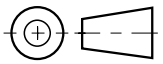

9

R5P with vent function

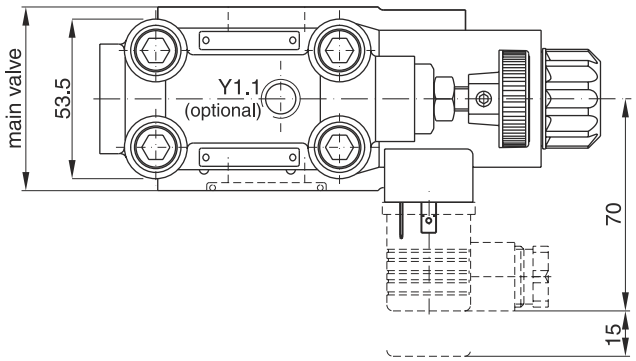

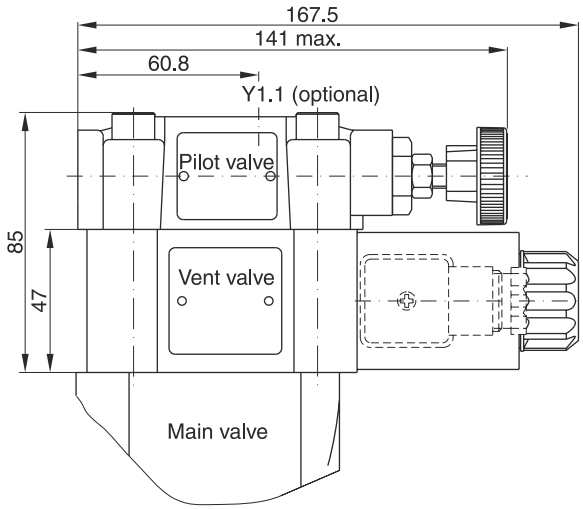

Seal kits	
NBR	**FPM**
DC solenoid	
S56-40609-0	S56-40609-5
AC solenoid	
S26-35237-0	S26-35237-5

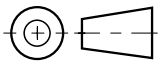

9

Code	Internal drain	External drain
11	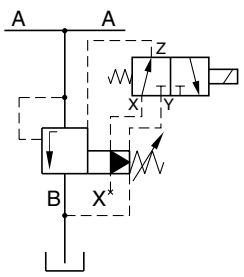	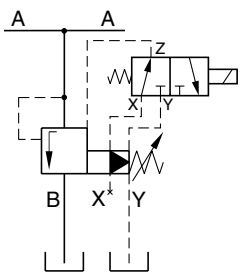
09	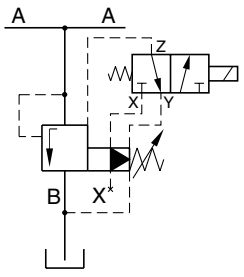	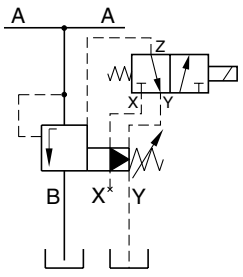

Direct operated check valves series C5V provide free flow in one direction and block the flow in the counter direction.

The SAE flanges allow to mount the C5V directly on the pressure port of pumps for protection against pressure shocks from the system.



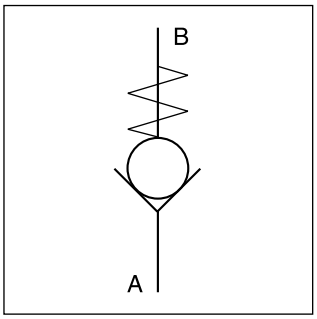

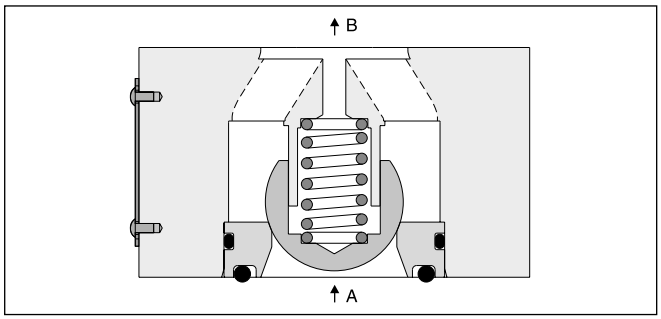

Features

- Direct operated check valve
- SAE61 and SAE62 flange
- 4 sizes (SAE ¾", 1", 1¼", 1½")
- 3 springs
- 5 options for body sealing

Ordering Code

C5V	☐	–	☐	☐	☐	B	☐	☐
Direct operated check valve	Nominal size		Flange	Body sealing	Cracking pressure	Design series	Seals	Options

Code	Port size
06	SAE ¾"
08	SAE 1"
10	SAE 1¼"
12	SAE 1½"

Code	Flange
3	SAE61
6	SAE62

Code	Body sealing
1	Sealing for port A
2 [1)]	Sealing for port A and X
3	Without sealing
4	Sealing for port B
5	Sealing for port A and B

Code	Cracking pressure
0	0.5 bar
1	1.0 bar
2	2.0 bar

Code	Seals
1	NBR
5	FPM

Code	Options
omit	Standard
019 [2)]	M14 mounting screws

[1)] For combination with R5U unloading valve (SAE61 only)

[1)] Only for C5V10-6 (SAE62)

General						
Size			**06 (¾")**	**08 (1")**	**10 (1¼")**	**12 (1½")**
Mounting			2-port inline flange (SAE61 and 62)			
Mounting position			unrestricted			
Ambient temperature		[°C]	-20...+60			
$MTTF_D$ value		[years]	150			
Weight		[kg]	0.6	0.9	1.3	1.8
Hydraulic						
Max. operating pressure	SAE61	[bar]	350	350	280	210
	SAE62	[bar]	420	420	420	420
Nominal flow		[l/min]	100	200	400	750
Fluid			Hydraulic oil according to DIN 51524			
Fluid temperature		[°C]	-20...+70 (NBR: -25...+70)			
Viscosity	permitted	[cSt] / [mm^2/s]	20...400			
	recommended	[cSt] / [mm^2/s]	30...80			
Filtration			ISO 4406 (1999); 18/16/13			

9

C5V06

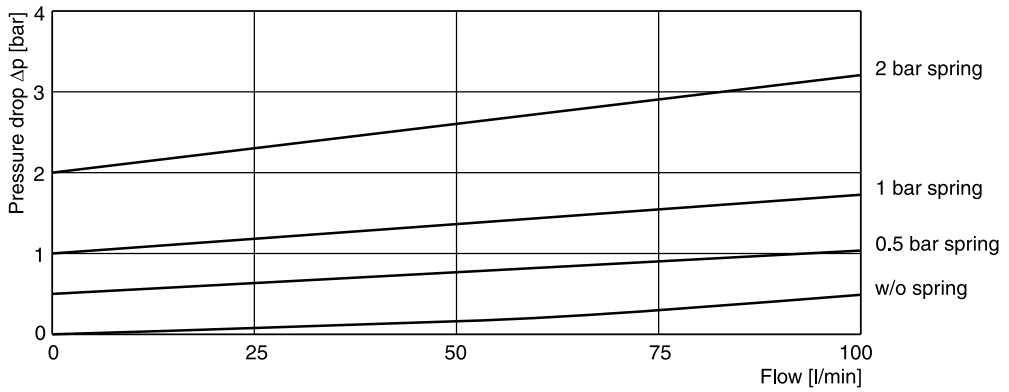

C5V08

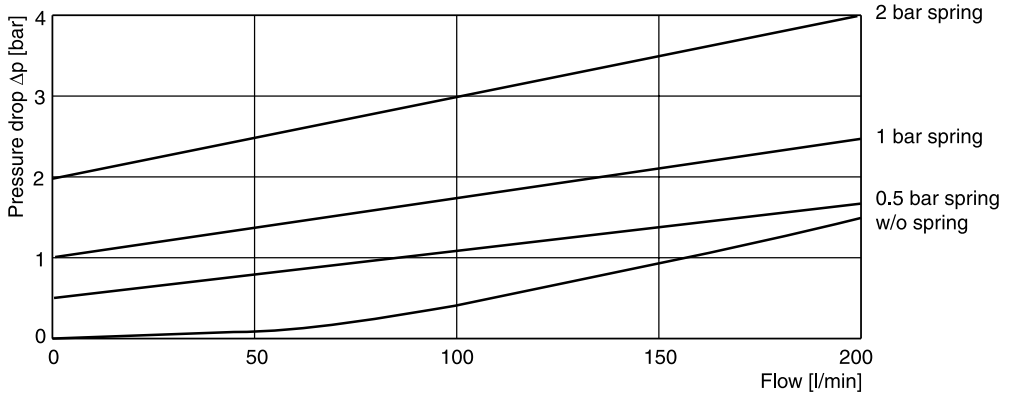

C5V10

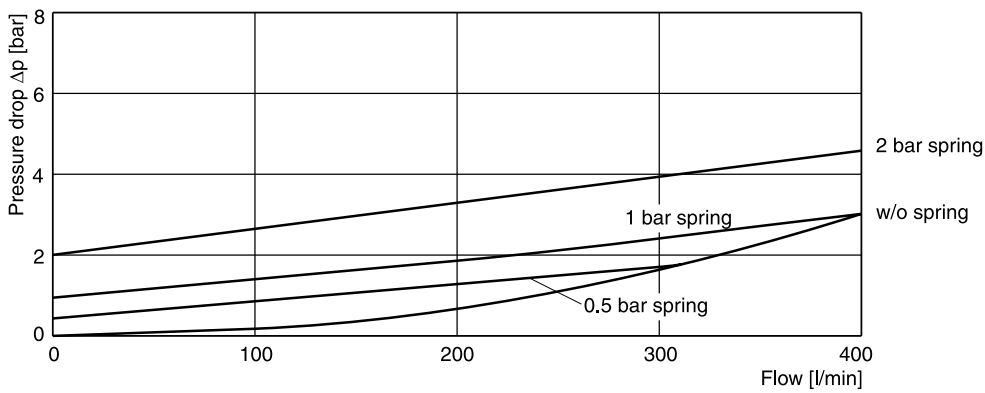

C5V12



All characteristic curves measured with HLP46 at 50 °C.

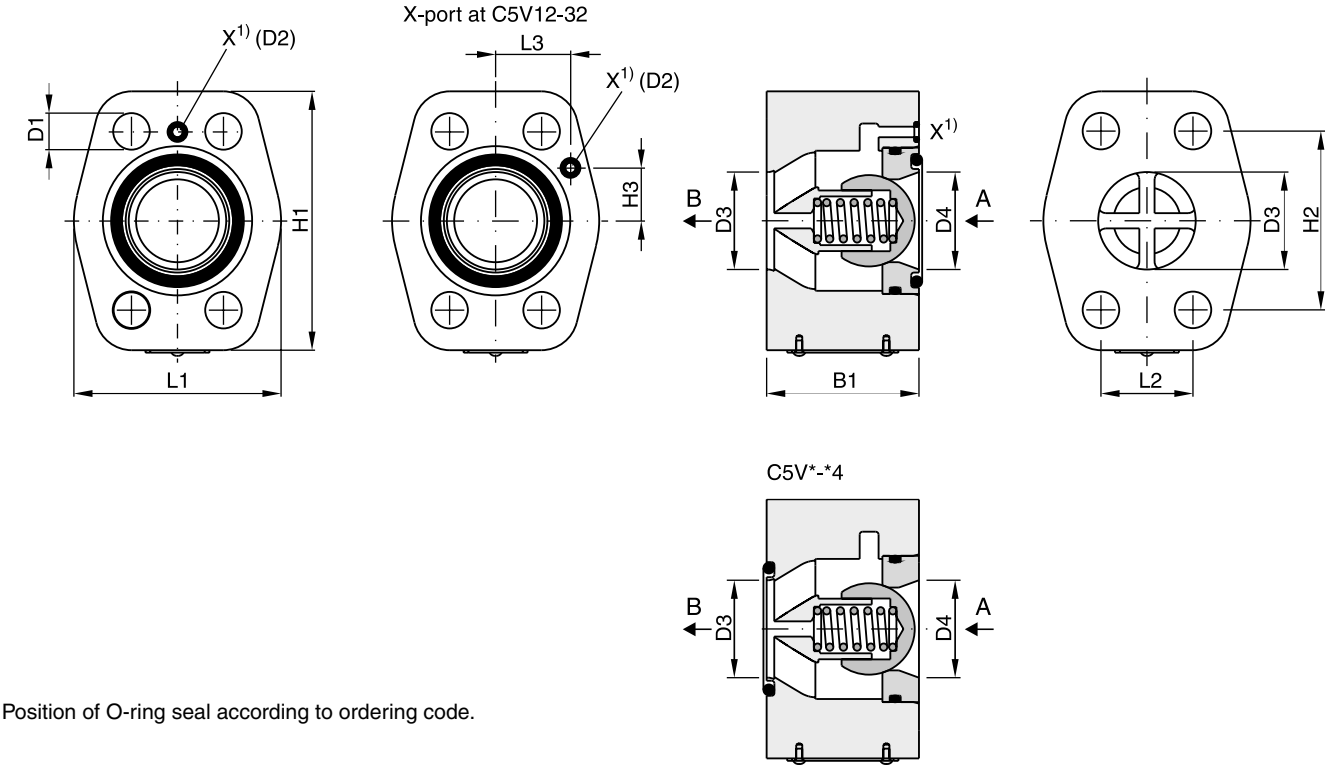

Position of O-ring seal according to ordering code.

Seal kits		
NG	**NBR**	**FPM**
06	S26-75409-0	S26-75409-5
08	S26-75410-0	S26-75410-5
10	S26-75411-0	S26-75411-5
12	S26-75412-0	S26-75412-5

Series	Nominal Size		L1	L2	L3	H1	H2	H3	B1	D1	D2	D3 + 0.8	D4
C5V06	3/4“	SAE61	48	22.2	–	64	47.6	–	45	10.5	Ø3	19	19
		SAE62	48	23.8	–	64	50.8	–	45	10.5	–	19	19
C5V08	1“	SAE61	60	26.2	–	74	52.4	–	45	10.5	Ø3	25	25
		SAE62	60	27.8	–	74	57.2	–	45	12.5	–	25	25
C5V10	1 1/4“	SAE61	68	30.2	–	85	58.7	–	50	12.5	Ø3	32	32
		SAE62	68	31.8	–	85	66.7	–	50	13.5 [2]	–	32	32
C5V12	1 1/2“	SAE61	80	35.7	27.2	104	69.8	22.4	50	13.5	Ø3	42	38
		SAE62	80	36.5	27.2	104	79.4	22.4	50	17	–	42	38

[1] X1 port for C5V*32* (for use with unloading valve R5U).
[2] D1 = 15 at option code 019 for M14 mounting screws.

Pilot operated check valves series C5P have a similar design to the subplate mounted C4V series. The SAE flanges allow to mount directly on the flanges of actuators to achieve a very compact design.



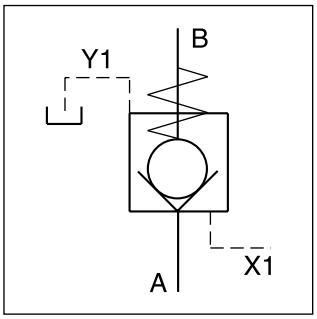

Features

- Pilot operated check valve
- 2-port body with SAE61 flange
- 3 sizes (SAE ¾", 1", 1¼")
- 4 opening ratios
- Optional with position control

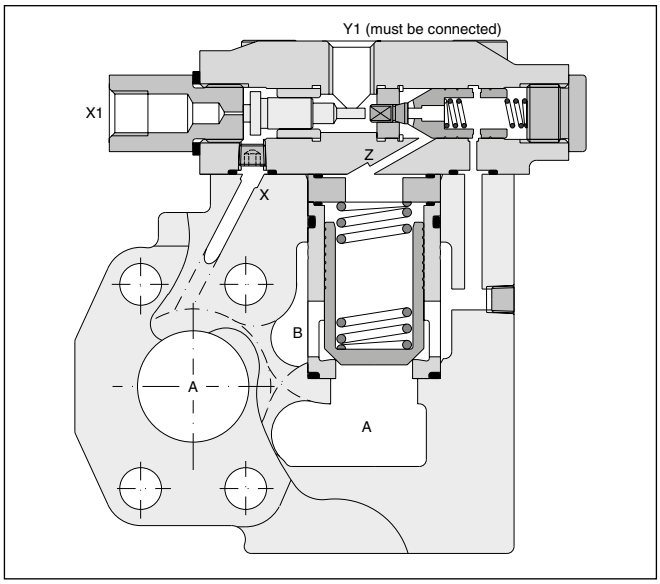

Ordering code

C5P	□	–	□	8	□	□	A	□	□
Pilot operated check valve	Nominal size		SAE61 interface	Pilot ports X1 and Y1=G¼"	Opening ratio	Cracking pressure	Design series	Seals	Options

Code	Nominal size
06	¾"
08	1"
10	1¼"

SAE61		
Code	Max. pressure	Size
4	280 bar	10 (SAE61)
5	350 bar	06/08 (SAE61)

Code	Opening ratio
1	1 : 1
3	3 : 1
8	8 : 1
9	10 : 1

Code	Opening ratio [1]
E	1 : 1
F	3 : 1
G	8 : 1
H	10 : 1

[1] Position control incl. amplifier for C5P08/10 only.

Code	Size	Flow A → B	Flow B → A
2	06	1.0 bar	1.5 bar
	08/10	1.0 bar	1.7 bar
4	06	4.0 bar	5.5 bar
	08/10	3.5 bar	6.0 bar
6	06	2.0 bar	3.0 bar
	08/10	2.2 bar	3.8 bar

Code	Options
omit	Standard
013	Position control with protection

Code	Seals
1	NBR
5	FPM

General					
Size			**06 (¾")**	**08 (1")**	**10 (1¼")**
Mounting			2-port inline flange (SAE61)		
Mounting position			unrestricted		
Ambient temperature		[°C]	-20...+60		
$MTTF_D$ value		[years]	150		
Weight		[kg]	3.9	4.4	5.7
Hydraulic					
Max. operating pressure	Ports A, B	[bar]	350	350	280
	Port Y1	[bar]	30	30	30
Nominal flow		[l/min]	180	360	600
Fluid			Hydraulic oil according to DIN 51524		
Fluid temperature		[°C]	-20...+70 (NBR: -25...+70)		
Viscosity,	permitted	[cSt] / [mm^2/s]	20...400		
	recommended	[cSt] / [mm^2/s]	30...80		
Filtration			ISO 4406 (1999); 18/16/13		

Position Control

Position control by proximity switch with amplifier. The closed position is monitored.

Valve open: proximity switch activated.

This proximity switch is pressure proof and has no wearing parts.

Note: Position control for C5P08 and C5P10 only.

Technical data proximity switch

Function		PNP, contact
Supply voltage (Us)	[VDC]	10...30
Supply voltage ripple	[%]	≤ 10
Current consumption	[mA]	max. 8
Residual voltage L-signal	[V]	Us - 2.2 at Imax
Output current (I)	[mA]	≤ 200
Protection class		IP67
Ambient temperature	[C°]	-25...+70
Wire cross section	[mm2]	3 x 0.5

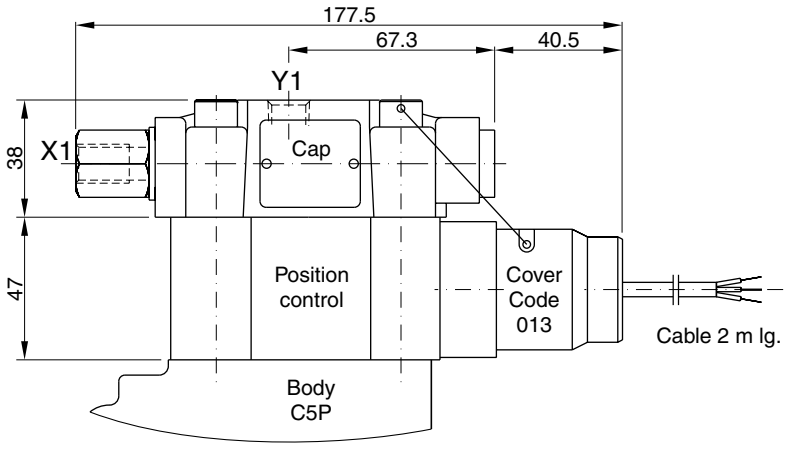

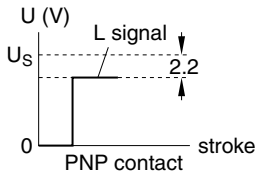

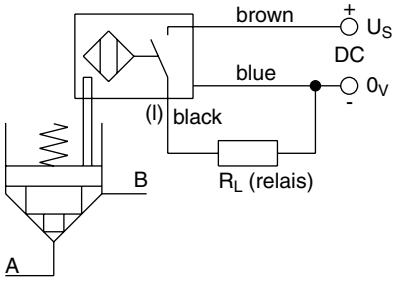

9

p/Q-performance curves

C5P06

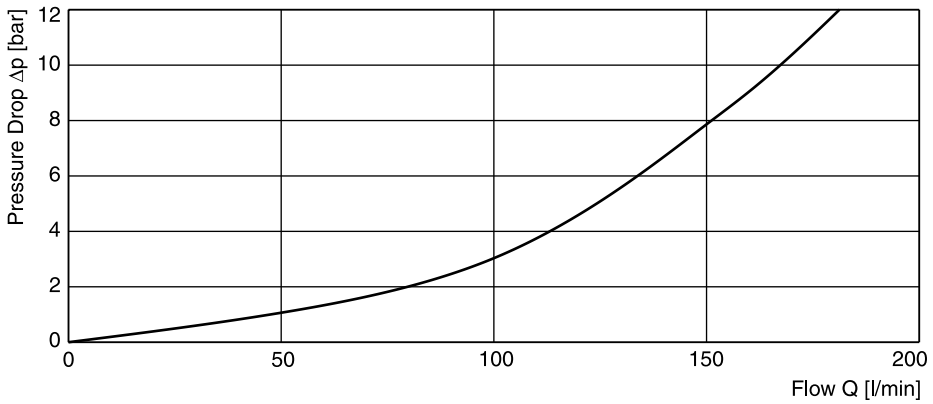

C5P08

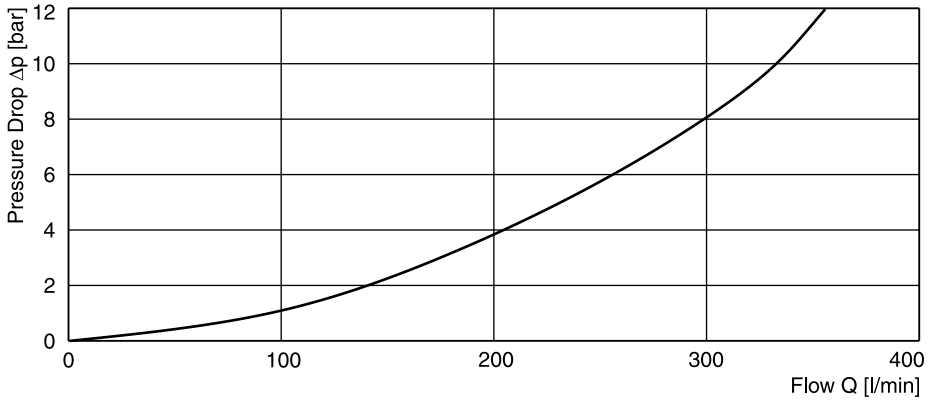

C5P10

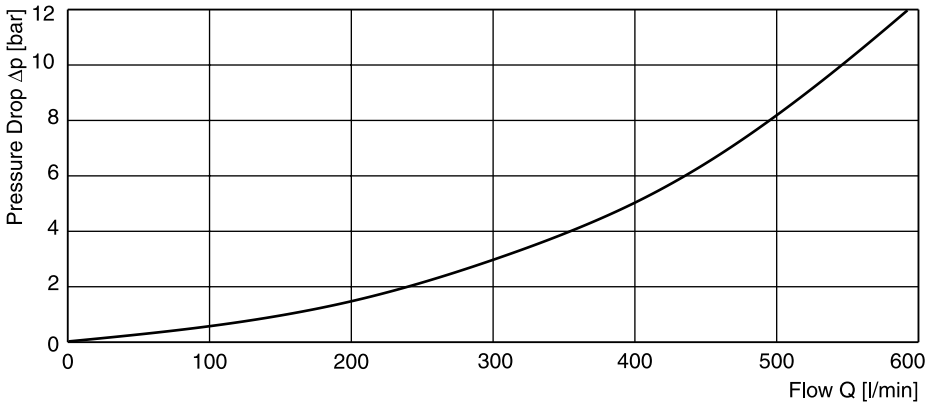

All characteristic curves measured with HLP46 at 50 °C.

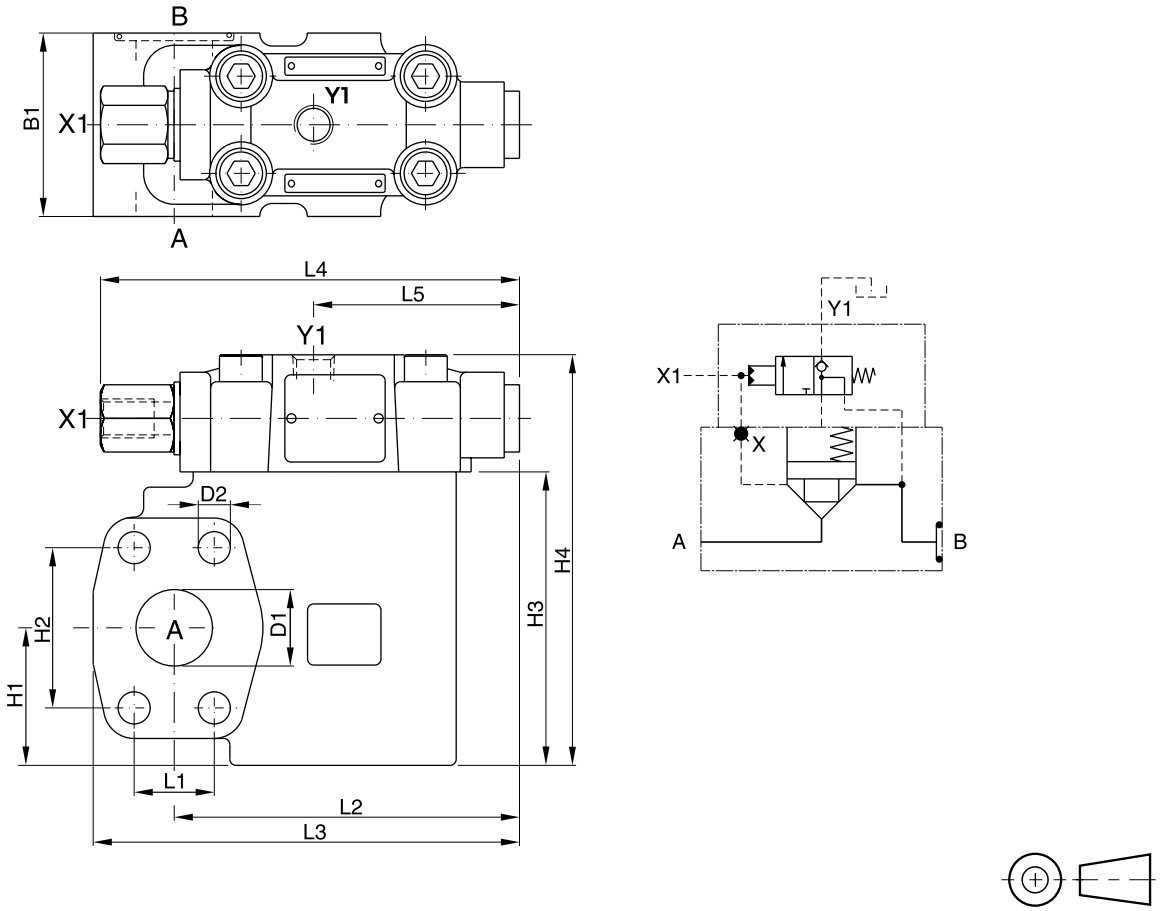

Seal kits		
NG	**NBR**	**FPM**
06	S26-59404-0	S26-59404-5
08	S26-59405-0	S26-59405-5
10	S26-59406-0	S26-59406-5

Dimensions

Type	L1	L2	L3	L4	L5	B1	H1	H2	H3	H4	D1	D2
C5P06	22.2	95.8	119.8	137	67.3	60	37	47.6	90	128	19	10.5
C5P08	26.2	112.9	139.4	137	67.3	60	45	52.4	96	134	25	10.5
C5P10	30.2	112.9	146.9	137	67.3	75	48	58.7	109	147	32	12.5

Ports

Port	Function	Port size		
		C5P06	**C5P08**	**C5P10**
A	Inlet or outlet	¾" SAE61	1" SAE61	1¼" SAE61
B	Outlet or inlet	¾" SAE61	1" SAE61	1¼" SAE61
X1	External pilot port	G¼"	G¼"	G¼"
Y1	External pilot drain	G¼"	G¼"	G¼"

BK bolt kits for SAE61 valves

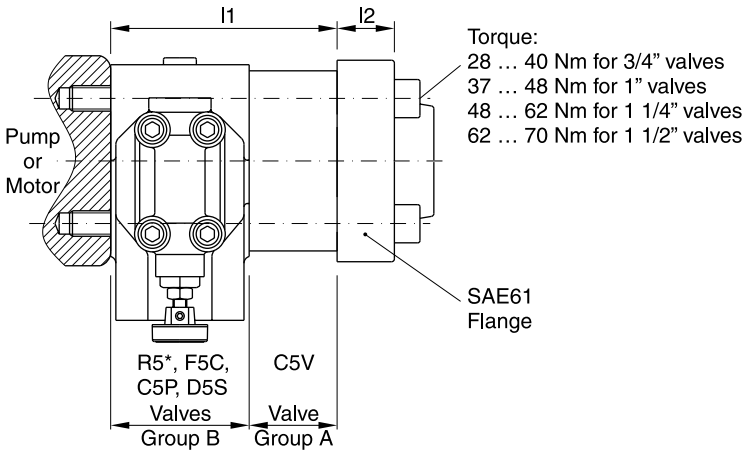

Port	Qty. of valves and group for each stack	I1	I2	UNC screws (12.9)	
				Dimension	Ordering code
¾" SAE61	1 x A	45	16...22	3/8"-16 x 3¼"	BK-358-16330-0
	1 x B	60		3/8"-16 x 3¾"	BK-358-16350-0
	(1 x A) + (1 x B)	105		3/8"-16 x 5½"	BK-358-16420-0
	2 x B	120		3/8"-16 x 6"	BK-358-16440-0
1" SAE61	1 x A	45	18...24	3/8"-16 x 3¼"	BK-358-16330-0
	1 x B	60		3/8"-16 x 3¾"	BK-358-16350-0
	(1 x A) + (1 x B)	105		3/8"-16 x 5¾"	BK-358-16430-0
	2 x B	120		3/8"-16 x 6¼"	BK-358-16450-0
1¼" SAE61	1 x A	50	21...25	7/16"-14 x 3½"	BK-358-18340-0
	1 x B	75		7/16"-14 x 4½"	BK-358-18380-0
	(1 x A) + (1 x B)	125		7/16"-14 x 6½"	BK-358-18460-0
	2 x B	150		7/16"-14 x 7½"	BK-358-18500-0
1½" SAE61	1 x A	50	25...27	1/2"-13 x 3¾"	BK-358-20350-0
	1 x B	80		1/2"-13 x 5"	BK-358-20400-0
	(1 x A) + (1 x B)	130		1/2"-13 x 6¾"	BK-358-20470-0
	2 x B	160		1/2"-13 x 8"	BK-358-20520-0

1 bolt kit contains 4 screws.

BK bolt kits for SAE62 valves

Series	Nominal size	I1	I2	UNC screws (12.9)	
				Dimension	Ordering code
C5V06	¾"	45	21	3/8"-16 x 3¼"	BK-358-16330-0
C5V08	1"	45	25	7/16"-14 x 3½"	BK-358-18340-0
C5V10	1¼"	50	27	1/2"-13 x 3¾"	BK-358-20350-0
R5V06-6	¾"	60	21	3/8"-16 x 3¾"	BK-358-16350-0
R5V08-6	1"	60	25	7/16"-14 x 3¾"	BK-358-18350-0
R5V10-6	1¼"	75	27	1/2"-13 x 4½"	BK-358-20380-0
R5V12-6	1½"	80	30	5/8"-11 x 5¼"	BK-358-24410-0

Inlet flange

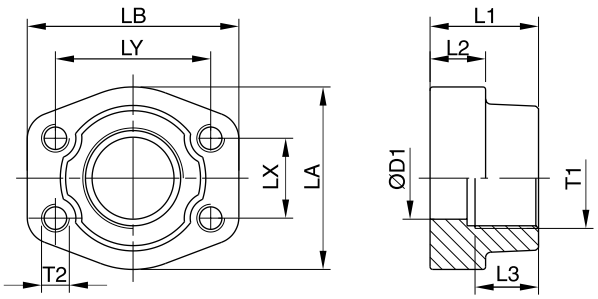

Port size	Order no. [1]	Inlet flange								
		D1	L1	L2	L3	LA	LB	LX	LY	T2
SAE61										
G¾"	PCFF33GSU	19	36	18	19	49	66	22.3	47.6	3/8" UNC
G1"	PCFF34GSU	25	38	18	19	53	71	26.2	52.4	3/8" UNC
G1¼"	PCFF35GSU	31	41	21	22	69	80	30.2	58.7	7/16" UNC
G1½"	PCFF36GSU	38	44	25	24	77	94	35.7	69.9	1/2" UNC
SAE62										
G¾"	PCFF63GSU	19	36	19	22	53	71	23.8	50.8	3/8" UNC
G1"	PCFF64GSU	25	44	24	24	69	80	27.8	57.2	7/16" UNC
G1¼"	PCFF65GSU	31	44	27	25	77	94	31.8	66.6	1/2" UNC
G1½"	PCFF66GSU	38	51	30	28	89	106	36.5	79.3	5/8" UNC

Outlet and tank port flange

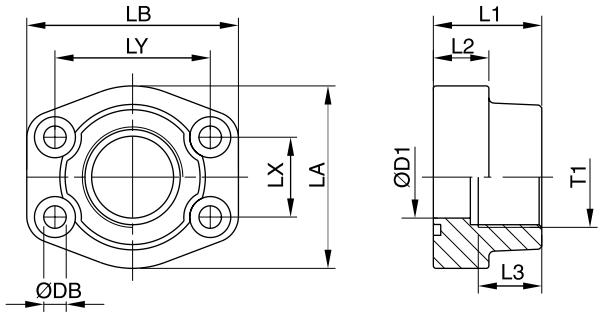

Port size	Order no. [2]	Outlet and tank port flange									Srews
		D1	L1	L2	L3	LA	LB	LX	LY	DB	
SAE61											
G¾"	PFF33GSU	19	36	18	18	49	66	22.3	47.6	10.5	3/8" x 1 1/2 UNC
G1"	PFF34GSU	25	38	18	20	53	71	26.2	52.4	10.5	3/8" x 1 1/2 UNC
G1¼"	PFF35GSU	31	41	21	22	69	80	30.2	58.7	11.5	7/16" x 1 1/2 UNC
G1½"	PFF36GSU	38	44	25	24	77	94	35.7	69.9	13.5	1/2" x 1 3/4 UNC
SAE62											
G¾"	PFF63GSU	19	36	19	18	53	71	23.8	50.8	10.5	3/8" x 1 1/2 UNC
G1"	PFF64GSU	25	44	24	20	69	80	27,8	57,2	11.5	7/16" x 1 1/2 UNC
G1¼"	PFF65GSU	31	44	27	22	77	94	31.8	66.6	15.0	1/2" x 1 3/4 UNC
G1½"	PFF66GSU	38	51	30	24	89	106	36.5	79.3	17.0	5/8" x 2 1/4 UNC

[1] 4-bolt flange with UNC threads.
[2] 4-bolt flange including UNC screws and O-ring.

Description	Threaded cable joint	Body colour coding	Order no.
Plug EN 175301-803 [1], design type AF, protection class IP65 Voltages up to 250 V	PG 9	black, B	**5001710**
		grey, A	**5001711**
	PG11	black, B	**5001716**
		grey, A	**5001717**

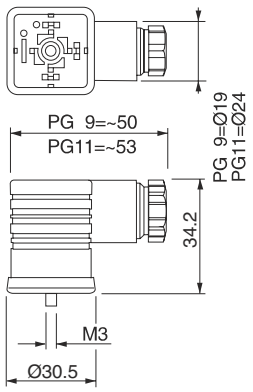

Other plugs on request

9

[1] EN 175301-803 (new) corresponding with DIN 43650 (old).

Series	Description	Size									Body		Page
	DIN / ISO	⅛	¼	⅜	½	¾	1	1¼	1½	2	L-port	T-port	
	Pressure valves, manual operation												
R4V	Pressure relief function				•	•	•	•			•	•	10-2
R4R	Pressure reducing function				•	•	•	•			•	•	10-8
	Pressure valves, proportional operation												
R4V*P2	Pressure relief function				•	•	•	•			•	•	10-14
R4R*P2	Pressure reducing function				•	•	•	•			•	•	10-19
	Directional seat valves												
D4S	In-line mounted				•	•	•	•			•	•	10-24
	Flow valves												
MV / 9MV	Throttle valve, with handle	•	•	•	•	•	•						10-33
N / 9N	Throttle valve, with knob	•	•	•	•	•	•						10-35
F / 9F	Throttle check valve, with knob	•	•	•	•	•	•	•	•	•			10-37
PCM / 9PCM	Flow control valve, with knob		•	•	•	•	•						10-39
	Check valves												
C / 9C	Direct operated	•	•	•	•	•	•						10-41
CP / 9CP	Pilot operated			•		•							10-43
RH	Pilot operated		•	•	•	•							10-45
	Accessories												
	Plug-in connectors												10-48

10

Pilot operated pressure relief valves for in-line mounting series R4V have a similar design to the subplate mounted R4V series. For single functions – where no manifold blocks are used – the valves can be directly placed in the pipework.

The R4V valves are available with 2 ports (L-body) for in-line relief function or with 3 ports (T-body) for relief functions in the bypass.



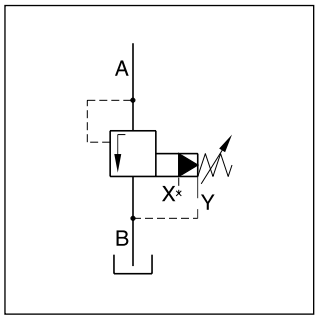

R4V10 L-body

Features

- Pilot operated with manual adjustment
- 2 interfaces:
  - L-body (R4V06-G¾", R4V10-G1¼")
  - T-body (R4V03-G½", R4V06-G1")
- 3 pressure stages
- 3 adjustment modes
  - Hand knob
  - Acorn nut with lead seal
  - Cylinder lock
- With optional vent function

R4V06 L-body

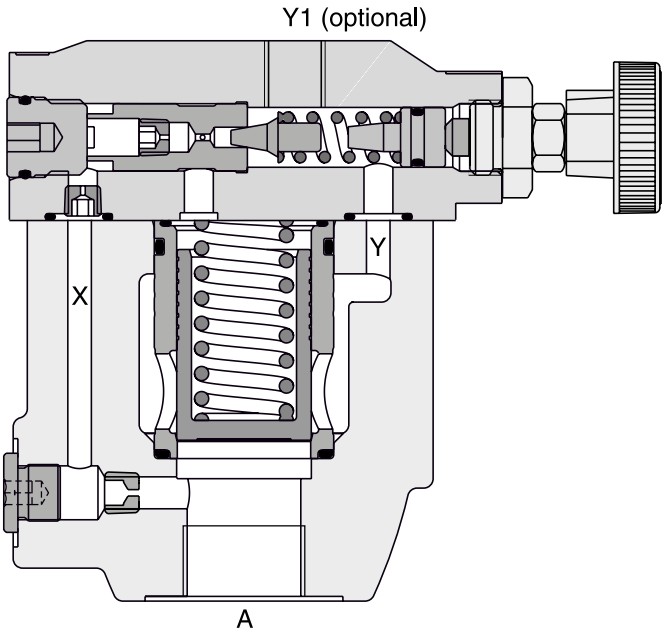

10

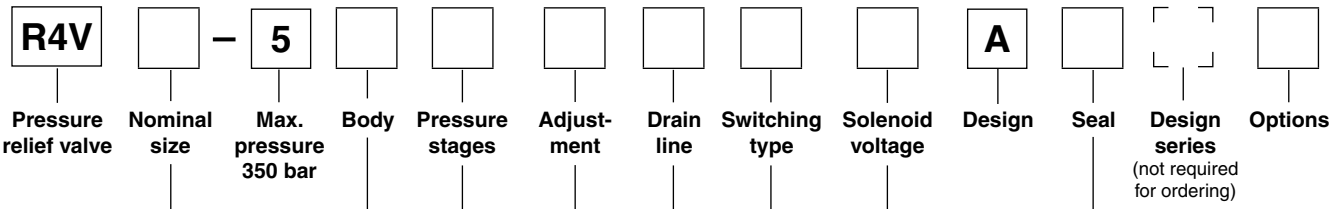

Code	Nominal size
03	NG10 (G½")
06	NG25 (G1" - T-body, G¾" - L-body)
10	NG32 (G1¼")

Code	Body
6	R4V03 T-body R4V06 T-body
D	R4V06 L-body R4V10 L-body

Code	Pressure stages
1	up to 105 bar
3	up to 210 bar
5	up to 350 bar

Code	Adjustment
1	Hand knob
3	Acorn nut with lead seal
4	Cylinder lock

Code	Seal
1	NBR
5	FPM

Code	Solenoid voltage
omit	Standard w/o vent function
G0R	12 V=
G0Q	24 V=
GAR[1)]	98 V=
GAG[1)]	205 V=
W30	110 V / 50 Hz 120 V / 60 Hz
W31	230 V / 50 Hz 240 V / 60 Hz

Code	Switching type
omit	Standard w/o vent function
09	Solenoid not activated unpressure circulation
11	Solenoid activated unpressure circulation

Code	Drain line
0	internal
2	external from pilot head (Y1)

10

[1)] To be used in combination with rectifier plugs at 120 VAC / 230 VAC power supply.

R4V

General						
Design		**T-body**		**L-body**		
Size		**03 (½")**	**06 (1")**	**06 (¾")**	**10 (1¼")**	
Mounting		Threaded body				
Mounting position		unrestricted				
Ambient temperature	[°C]	-20...+60				
$MTTF_D$ value	[years]	75				
Weight	[kg]	3.2	6.6	3.3	5.6	
Hydraulic						
Max. operating pressure	[bar]	Ports A and X up to 350; Ports B and Y 30 bar				
Pressure stages	[bar]	105, 210, 350				
Nominal flow	[l/min]	60	200	200	450	
Fluid		Hydraulic oil according to DIN 51524				
Fluid temperature	[°C]	-20…+70 (NBR: -25…+70)				
Viscosity permitted	[cSt] / [mm^2/s]	20...400				
Viscosity recommended	[cSt] / [mm^2/s]	30...80				
Filtration		ISO 4406 (1999); 18/16/13				

R4V with vent function

General							
Design		**T-body**		**L-body**			
Size		**03 (½")**	**06 (1")**	**06 (¾")**	**10 (1¼")**		
Mounting		Threaded body					
Mounting position		unrestricted					
Ambient temperature	[°C]	-20...+60					
$MTTF_D$ value	[years]	75					
Weight	[kg]	4.9	8.3	5.0	7.3		
Hydraulic							
Max. operating pressure	[bar]	Ports A and X up to 350; Ports B and Y 30					
Pressure stages	[bar]	105, 210, 350					
Nominal flow	[l/min]	60	200	200	450		
Fluid		Hydraulic oil according to DIN 51524					
Fluid temperature	[°C]	-20…+70 (NBR: -25…+70)					
Viscosity permitted	[cSt] / [mm^2/s]	20...400					
Viscosity recommended	[cSt] / [mm^2/s]	30...80					
Filtration		ISO 4406 (1999); 18/16/13					
Electrical (solenoid)							
Duty ratio		100 % ED; CAUTION: coil temperature up to 150 °C possible					
Protection class		IP65 in accordance with EN 60529 (with correctly mounted plug-in connector)					
	Code	G0R	G0Q	GAR	GAG	W30	W31
Supply voltage	[V] [V]	12 V =	24 V =	98 V =	205 V =	110 at 50 Hz 120 at 60 Hz	230 at 50 Hz 240 at 60 Hz
Tolerance supply voltage	[%]	±10	±10	±10	±10	±5	±5
Current consumption hold	[A]	2.72	1.29	0.33	0.13	0.6 / 0.55	0.3 / 0.27
in rush	[A]	2.72	1.29	0.33	0.13	2.5 / 2.4	1.25 / 1.2
Power consumption hold	[W]	32.7	31	31.9	28.2	70/70 VA	70/70 VA
in rush	[W]	32.7	31	31.9	28.2	280/290 VA	280/290 VA
Solenoid connection		Connector as per EN175301-803, solenoid identification as per ISO 9461					
Wiring min.	[mm^2]	3 x 1.5 recommended					
Wiring length max.	[m]	50 recommended					

10

p/Q performance curve [1)]

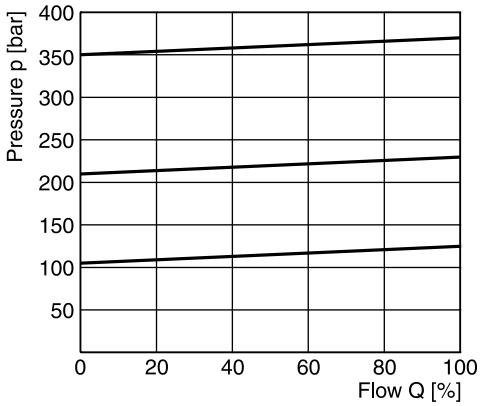

Minimum pressure curve

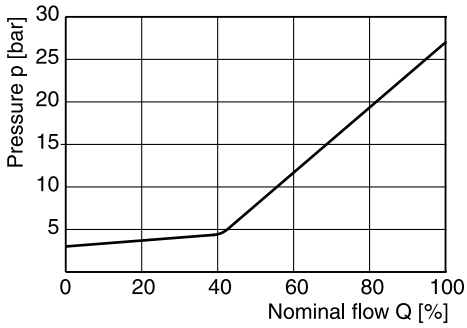

All characteristic curves measured with HLP46 at 50 °C.

Dimensions
T-body

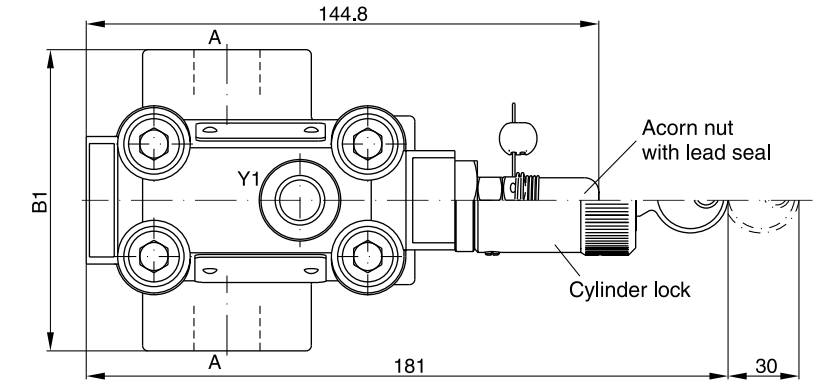

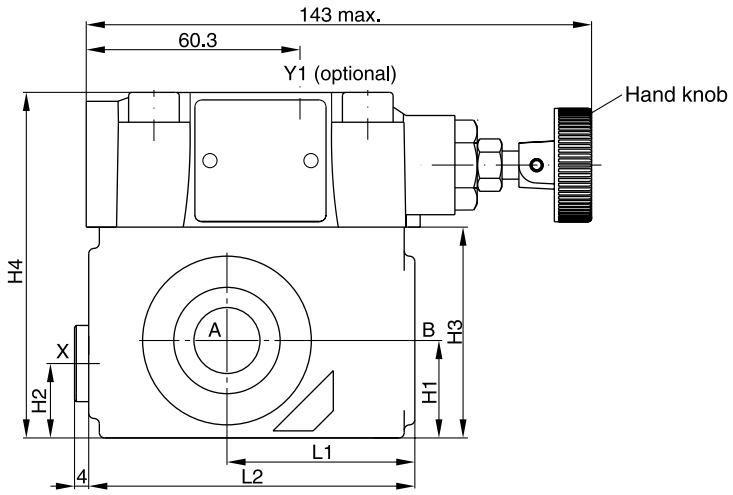

[1)] The performance curves are measured with external drain. For internal drain the tank pressure has to be added to curve.

L-body

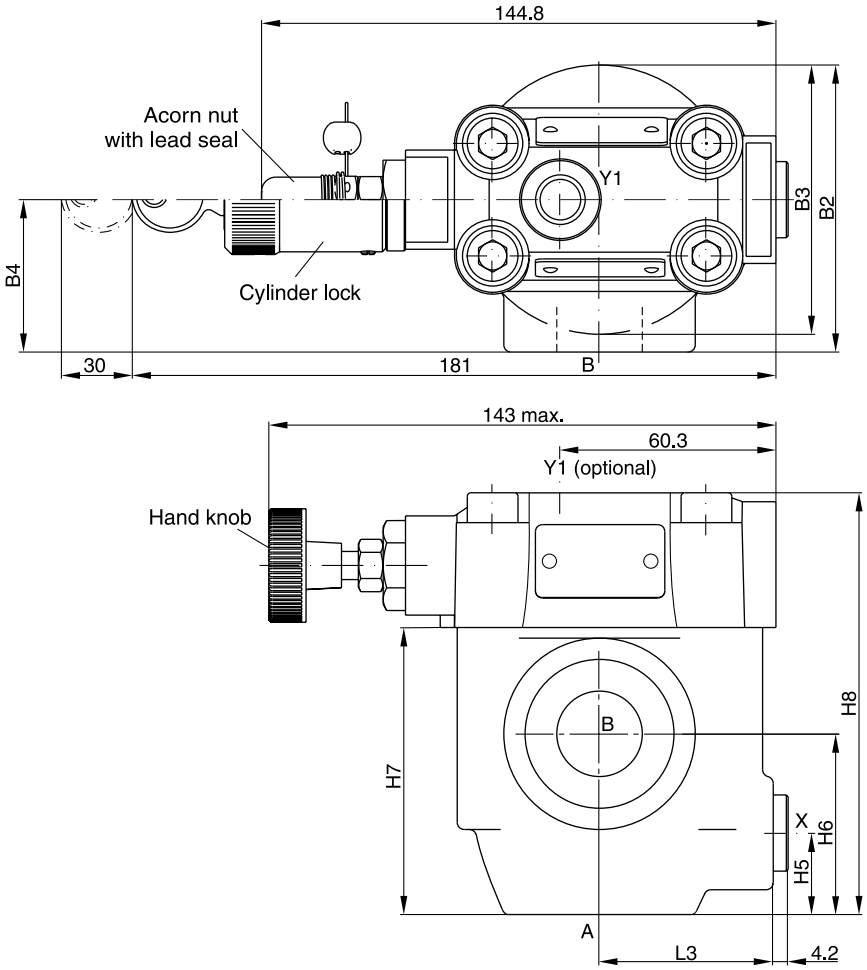

Seal kits		
NG	**NBR**	**FPM**
03	S26-58507-0	S26-58507-5
06	S26-58475-0	S26-58475-5
10	S26-58508-0	S26-58508-5

NG	Body	B1	B2	B3	B4	H1	H2	H3	H4	H5	H6	H7	H8	L1	L2	L3
03	T-body	85	–	–	–	27.5	21	59.5	97.5	–	–	–	–	53	92	–
06	T-body	136	–	–	–	38	28	93	131	–	–	–	–	66.5	117.5	–
06	L-body	–	81	76	43	–	–	–	–	23	51	81	119	–	–	49
10	L-body	–	120.7	85.8	77.8	–	–	–	–	38.1	50.8	96	134	–	–	49.8

Ports	Function	Port size			
		R4V03 T-body	R4V06 L-body	R4V06 T-body	R4V10 L-body
A	pressure (inlet)	G½ "	G¾ "	G1 "	G1¼ "
B	tank (outlet)	G½ "	G¾ "	G1 "	G1¼ "
X [1)]	external remote control or vent connection	G¼ "	G¼ "	G¼ "	G¼ "
Y1 [2)]	external drain	G¼ "	G¼ "	G¼ "	G¼ "

[1)] Closed when supplied.
[2)] Port Y1 is only available at drain line (code 2) external from the pilot head.

R4V with vent function

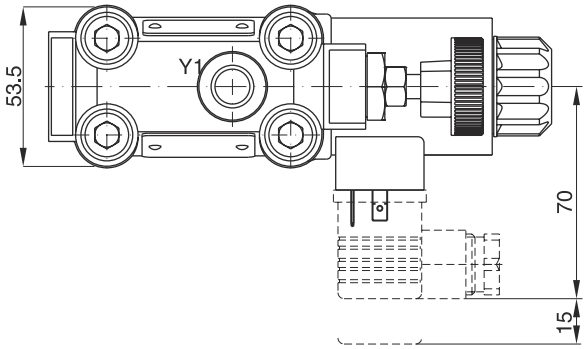

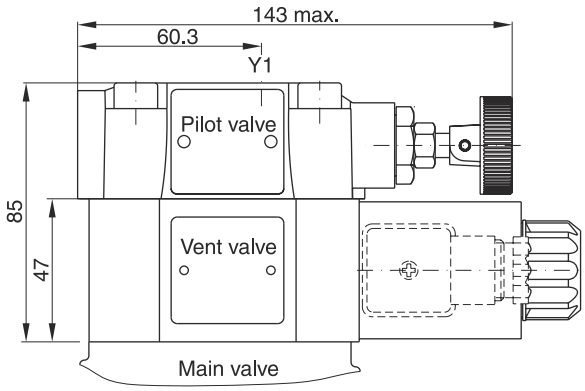

Seal kits	
NBR	**FPM**
DC solenoid	
S56-40609-0	S56-40609-5
AC solenoid	
S26-35237-0	S26-35237-5

Code	Internal drain	External drain
11	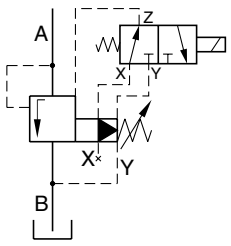	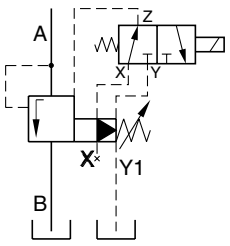
09	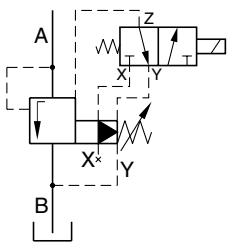	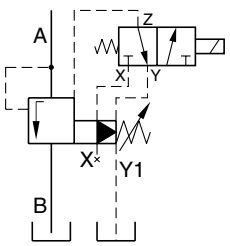

10

Pilot operated pressure reducing valves for in-line mounting series R4R have a similar design to the subplate mounted R4R series. For single functions – where no manifold blocks are used – the valves can be directly placed in the pipework.

The valves are available with 2 ports (L-body) or with 3 ports (T-body).



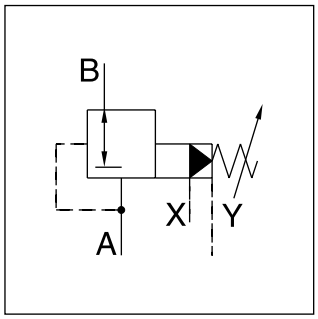

R4R10 L-body

Features

- Pilot operated with manual adjustment
- Normally closed to avoid undesired motion
- 2 interfaces
  - L-body (R4R06-G¾", R4R10-G1¼")
  - T-body (R4R03-G½", R4R06-G1")
- 3 pressure stages
- 3 adjustment modes
  - Hand knob
  - Acorn nut with lead seal
  - Cylinder lock
- With optional vent function

R4R06 L-body

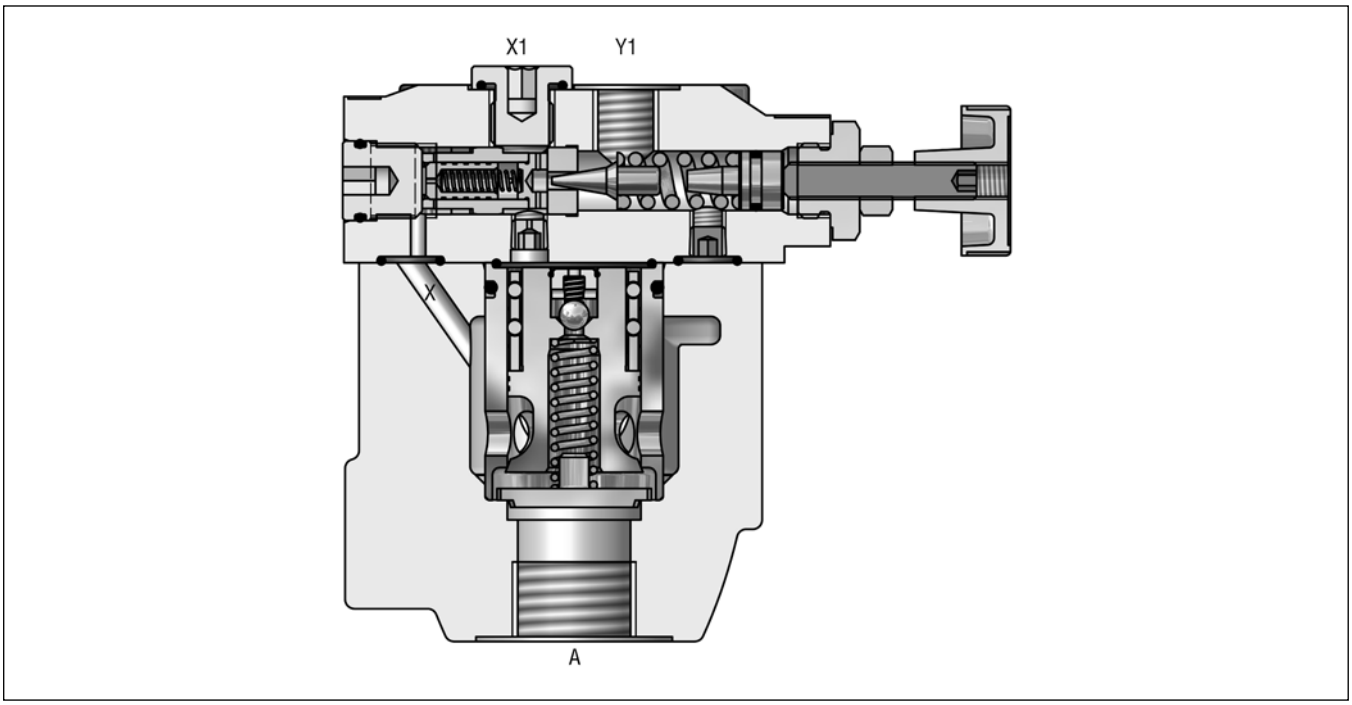

10

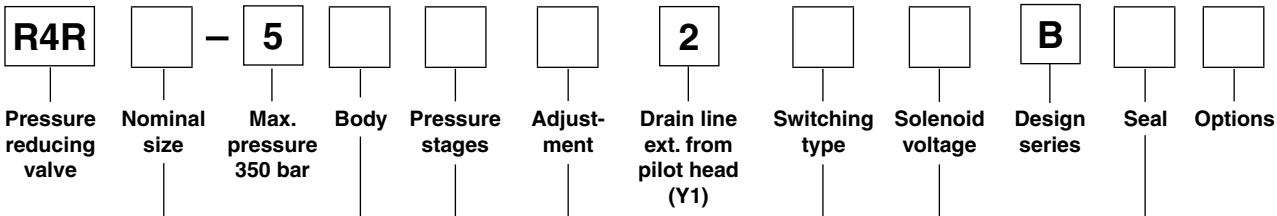

Code	Nominal size
03	NG10 (G½")
06	NG25 (G1" - T-body, G¾" - L-body)
10	NG32 (G1¼")

Code	Seal
1	NBR
5	FPM

Code	Solenoid voltage
omit	Standard w/o vent function
G0R	12 V=
G0Q	24 V=
GAR[1)]	98 V=
GAG[1)]	205 V=
W30	110 V / 50 Hz 120 V / 60 Hz
W31	230 V / 50 Hz 240 V / 60 Hz

Code	Body
6	R4R03 T-body R4R06 T-body
D	R4R06 L-body R4R10 L-body

Code	Pressure stages
1	up to 105 bar
3	up to 210 bar
5	up to 350 bar

Code	Switching type
omit	Standard w/o vent function
09	Solenoid not activated, pressure reducer non-active
11	Solenoid activated pressure reducer non-active

Code	Adjustment
1	Hand knob
3	Acorn nut with lead seal
4	Cylinder lock

10

[1)] To be used in combination with rectifier plugs at 120 VAC / 230 VAC power supply.

R4R

General						
Design		**T-body**		**L-body**		
Size		**03 (½")**	**06 (1")**	**06 (¾")**	**10 (1¼")**	
Mounting		Threaded body				
Mounting position		unrestricted				
Ambient temperature	[°C]	-20...+60				
$MTTF_D$ value	[years]	75				
Weight	[kg]	3.2	3.3	5.6	6.6	
Hydraulic						
Max. operating pressure	[bar]	Ports A, B and X: 350; Port Y depressurized				
Pressure stages	[bar]	105, 210, 350				
Nominal flow	[l/min]	60	200	200	450	
Fluid		Hydraulic oil according to DIN 51524				
Fluid temperature	[°C]	-20...+70 (NBR: -25...+70)				
Viscosity permitted	[cSt]/[mm^2/s]	20...400				
Viscosity recommended	[cSt]/[mm^2/s]	30...80				
Filtration		ISO 4406 (1999); 18/16/13				

R4R with vent function

General							
Design		**T-body**		**L-body**			
Size		**03 (½")**	**06 (¾")**	**06 (1")**	**10 (1¼")**		
Mounting		Threaded body					
Mounting position		unrestricted					
Ambient temperature	[°C]	-20...+60					
$MTTF_D$ value	[years]	75					
Weight	[kg]	4.9	5.0	7.3	8.3		
Hydraulic							
Max. operating pressure	[bar]	Ports A and X up to 350; Ports B and Y depressurized					
Pressure stages	[bar]	105, 210, 350					
Nominal flow	[l/min]	60	200	200	450		
Fluid		Hydraulic oil according to DIN 51524					
Fluid temperature	[°C]	-20...+70 (NBR: -25...+70)					
Viscosity permitted	[cSt] / [mm^2/s]	20...400					
Viscosity recommended	[cSt] / [mm^2/s]	30...80					
Filtration		ISO 4406 (1999); 18/16/13					
Electrical (solenoid)							
Duty ratio		100 % ED; CAUTION: coil temperature up to 150 °C possible					
Protection class		IP65 in accordance with EN 60529 (with correctly mounted plug-in connector)					
	Code	G0R	G0Q	GAR	GAG	W30	W31
Supply voltage	[V] [V]	12 V =	24 V =	98 V =	205 V =	110 at 50 Hz 120 at 60 Hz	230 at 50 Hz 240 at 60 Hz
Tolerance supply voltage	[%]	±10	±10	±10	±10	±5	±5
Current consumption hold	[A]	2.72	1.29	0.33	0.13	0.6 / 0.55	0.3 / 0.27
in rush	[A]	2.72	1.29	0.33	0.13	2.5 / 2.4	1.25 / 1.2
Power consumption hold	[W]	32.7	31	31.9	28.2	70 / 70 VA	70 / 70 VA
in rush	[W]	32.7	31	31.9	28.2	280 / 290 VA	280 / 290 VA
Solenoid connection		Connector as per EN175301-803, solenoid identification as per ISO 9461					
Wiring min.	[mm^2]	3 x 1.5 recommended					
Wiring length max.	[m]	50 recommended					

Reduced pressure pA versus flow Q
R4R03 [1)]

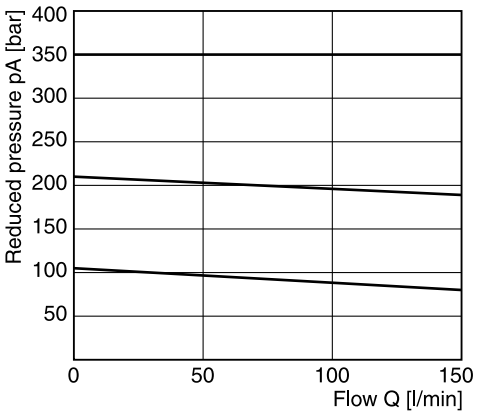

Minimum pressure curve

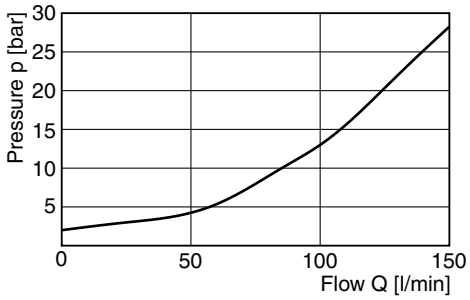

Reduced pressure pA versus flow Q
R4R06 [1)]

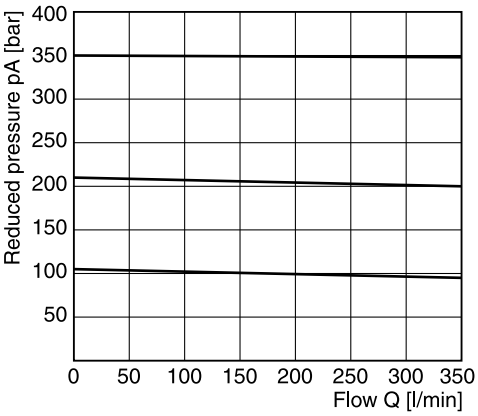

Minimum pressure curve

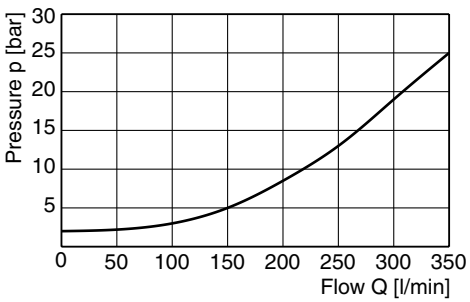

Reduced pressure pA versus flow Q
R4R10 [1)]

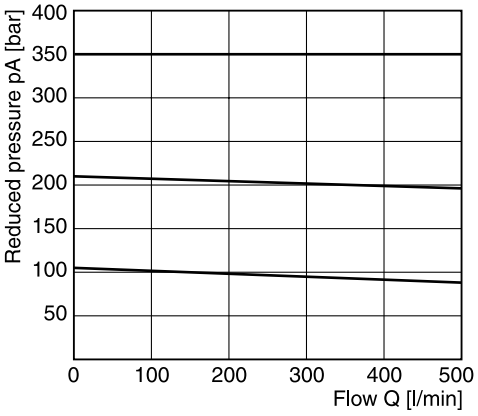

Minimum pressure curve

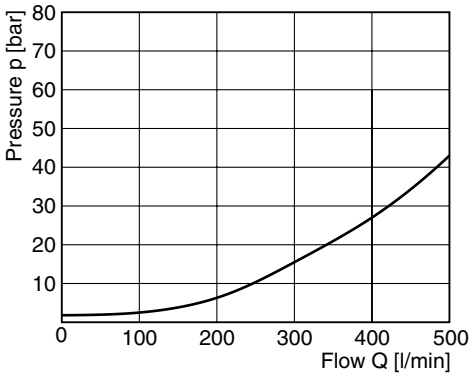

All characteristic curves measured with HLP46 at 50 °C.

[1)] Measured at 350 bar primary pressure pB.

T-body

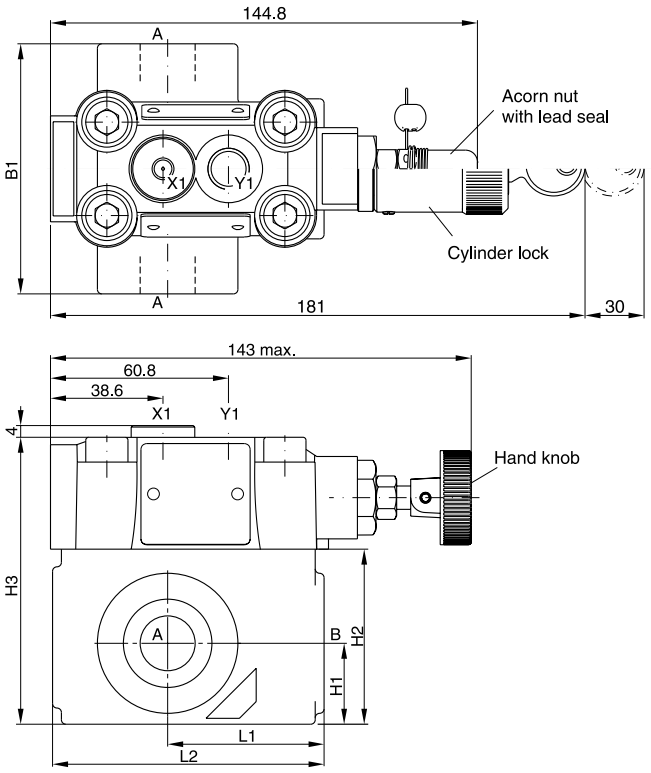

L-body

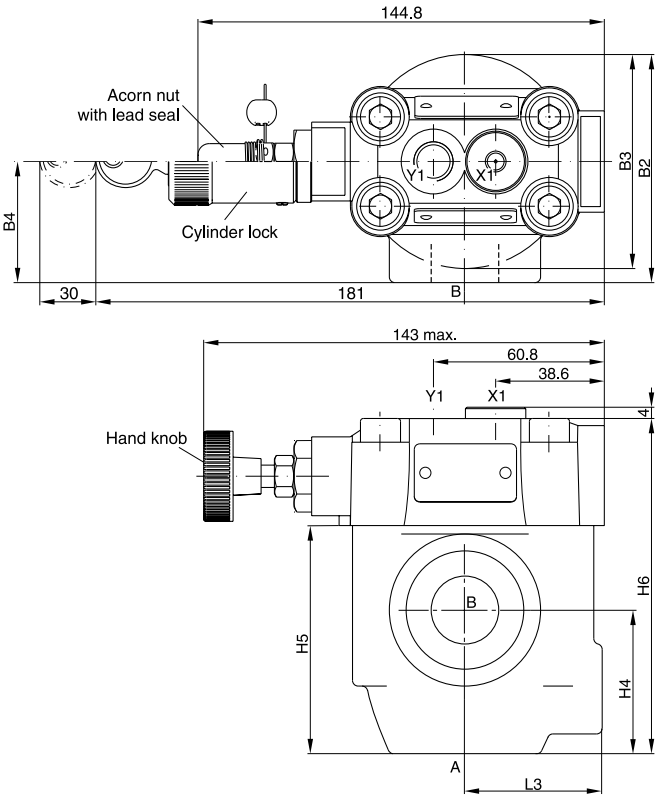

10

Seal kits		
NG	**NBR**	**FPM**
03	S26-58507-0	S26-58507-5
06	S26-58475-0	S26-58475-5
10	S26-58508-0	S26-58508-5

NG	Body	B1	B2	B3	B4	H1	H2	H3	H4	H5	H6	L1	L2	L3
03	T-body	85	–	–	–	27.5	59.5	97.5	–	–	–	53	92	–
06	T-body	136	–	–	–	38	93	131	–	–	–	66.5	117.5	–
06	L-body	–	81	76	43	–	–	–	51	81	119	–	–	49
10	L-body	–	120.7	85.8	77.8	–	–	–	50.8	96	134	–	–	49.8

Ports	Function	Port size			
		R4V03 T-body	R4V06 L-body	R4V06 T-body	R4V10 L-body
B	pressure (inlet)	G½ "	G¾ "	G1 "	G1¼ "
A	pressure (outlet)	G½ "	G¾ "	G1 "	G1¼ "
X1	external remote control or vent connection	G¼ "	G¼ "	G¼ "	G¼ "
Y1	external drain	G¼ "	G¼ "	G¼ "	G¼ "

R4R with vent function

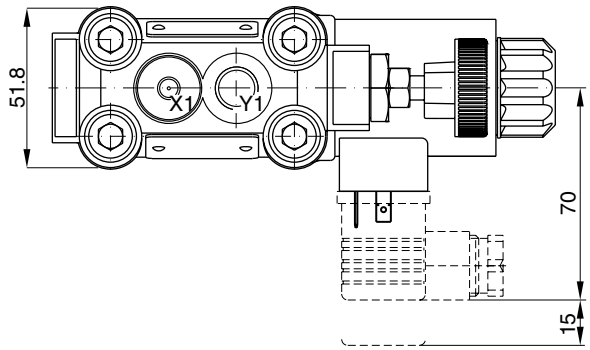

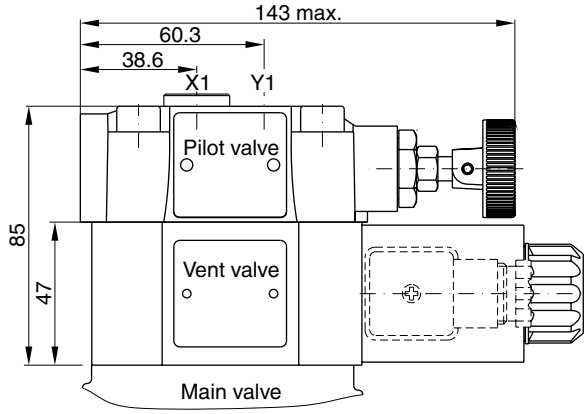

Seal kits	
NBR	**FPM**
DC solenoid	
S56-40609-0	S56-40609-5
AC solenoid	
S26-35237-0	S26-35237-5

Code	External drain
11	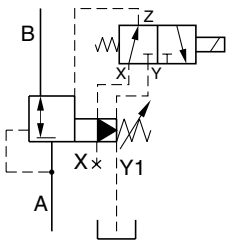
09	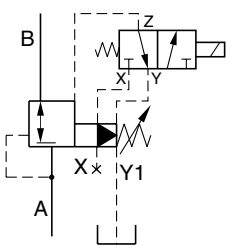

10

Proportional pressure relief valves series R4V*P2 are based on the mechanically adjusted series R4V. The additional proportional unit between the mechanical pilot valve and the main stage allows continuous pressure adjustment.

The optimum performance can be achieved in combination with the digital amplifier module PCD00A-400.



R4V10*P2 L-body

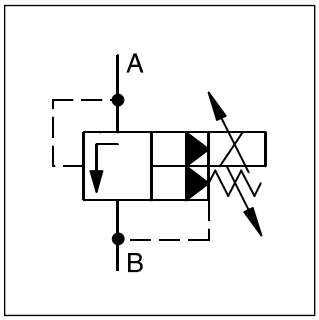

Features

- Continuous adjustment by proportional solenoid
- 2 interfaces
  - L-body (R4V06-G¾", R4V10-G1¼")
  - T-body (R4V03-G½", R4V06-G1")
- 3 pressure stages
- With mechanical maximum pressure adjustment

R4V06*P2 L-body

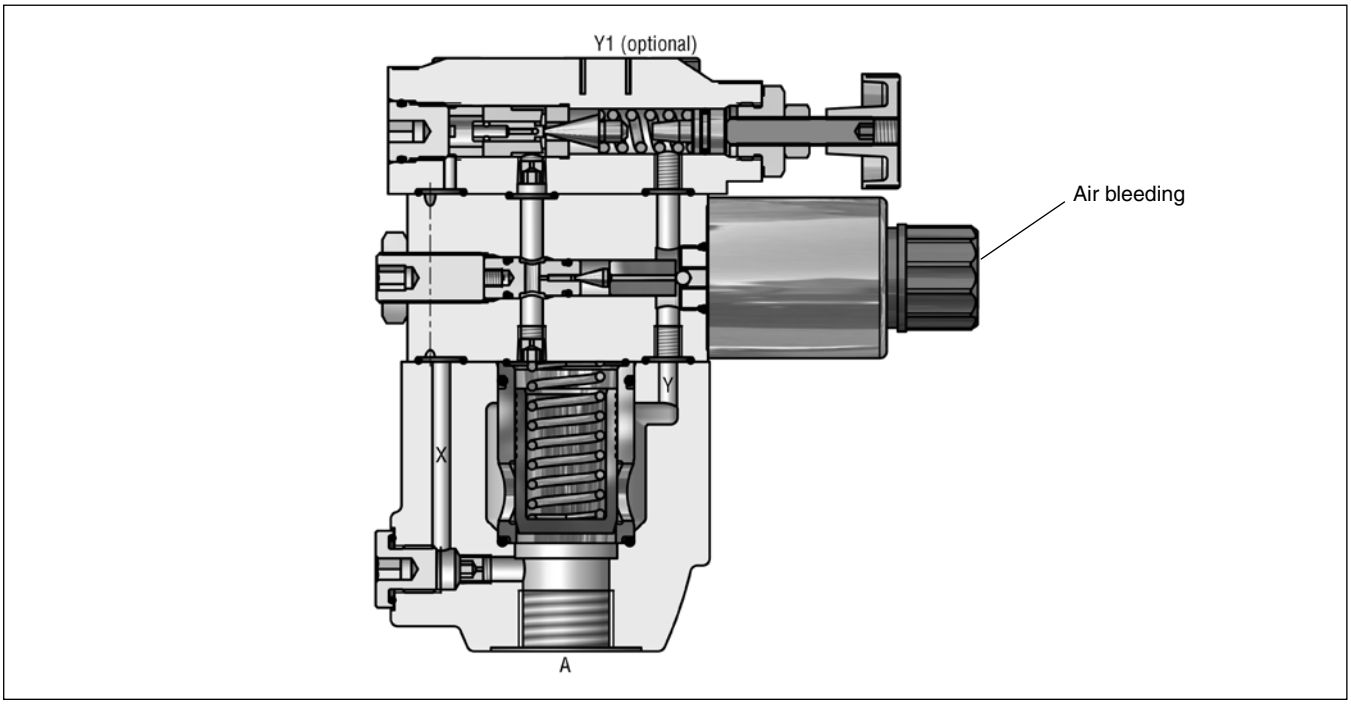

10

Ordering code

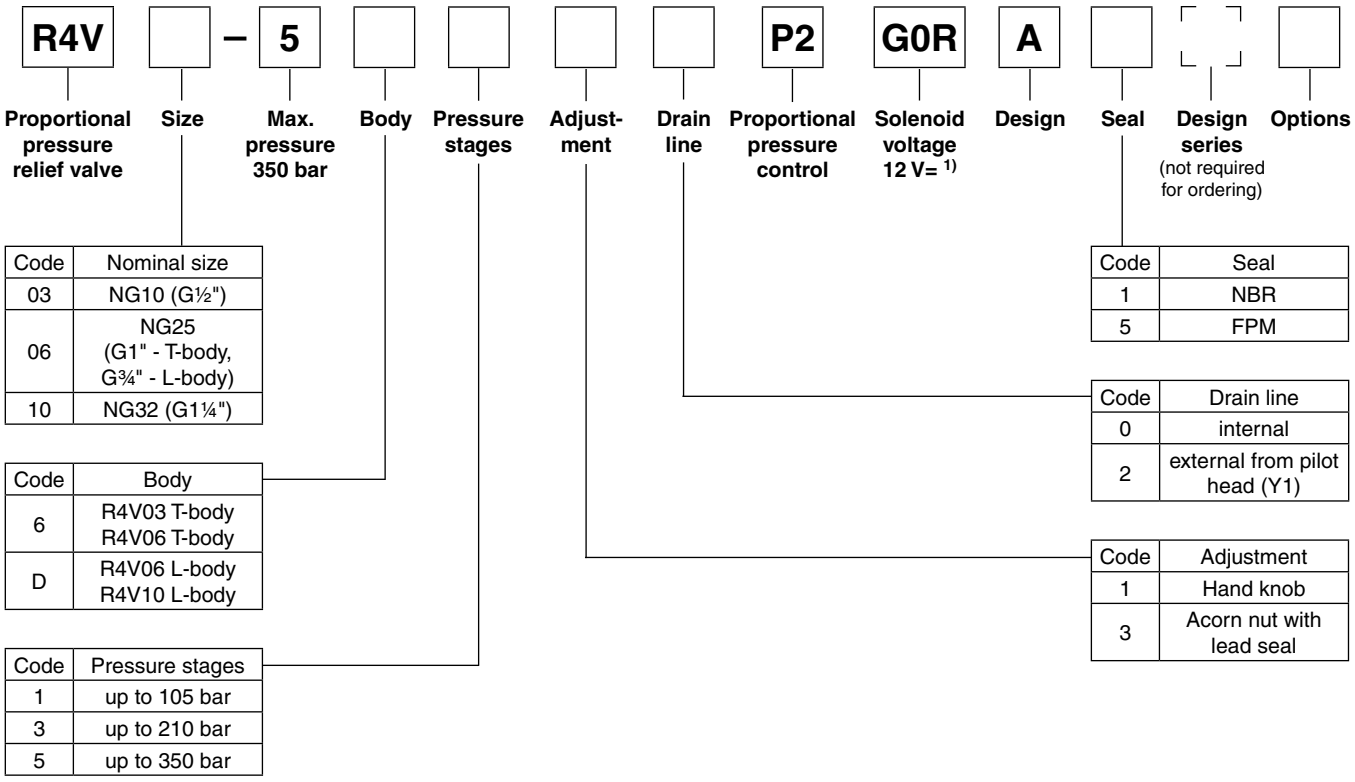

Code	Nominal size
03	NG10 (G½")
06	NG25 (G1" - T-body, G¾" - L-body)
10	NG32 (G1¼")

Code	Body
6	R4V03 T-body R4V06 T-body
D	R4V06 L-body R4V10 L-body

Code	Pressure stages
1	up to 105 bar
3	up to 210 bar
5	up to 350 bar

Code	Seal
1	NBR
5	FPM

Code	Drain line
0	internal
2	external from pilot head (Y1)

Code	Adjustment
1	Hand knob
3	Acorn nut with lead seal

1) Onboard electronics on request

Technical data R4V*P2

General					
Design		**T-body**		**L-body**	
Size		**03 (½")**	**06 (1")**	**06 (¾")**	**10 (1¼")**
Mounting		Threaded body			
Mounting position		unrestricted			
Ambient temperature	[°C]	-20...+60			
$MTTF_D$ value	[years]	75			
Weight	[kg]	5.0	5.1	7.4	8.4
Hydraulic					
Max. operating pressure	[bar]	Ports A and X up to 350; Ports B and Y 30 bar			
Pressure stages	[bar]	105, 210, 350			
Nominal flow	[l/min]	60	200	200	450
Fluid		Hydraulic oil according to DIN 51524			
Fluid temperature	[°C]	-20...+70 (NBR: -25...+70)			
Viscosity permitted	[cSt] / [mm^2/s]	20...400			
Viscosity recommended	[cSt] / [mm^2/s]	30...80			
Filtration		ISO 4406 (1999), 18/16/13			
Electrical (prop. solenoid)					
Duty ratio	[%]	100			
Protection class		IP65 in accordance with EN 60529 (with correctly mounted plug-in connector)			
Nominal voltage	[V]	12 =			
Max. current	[A]	2.3			
Coil resistance	[Ohm]	4 at 20 °C			
Solenoid connection		Connector as per EN175301-803			
Power amplifier		PCD00A-400			

Signal/pressure curve R4V

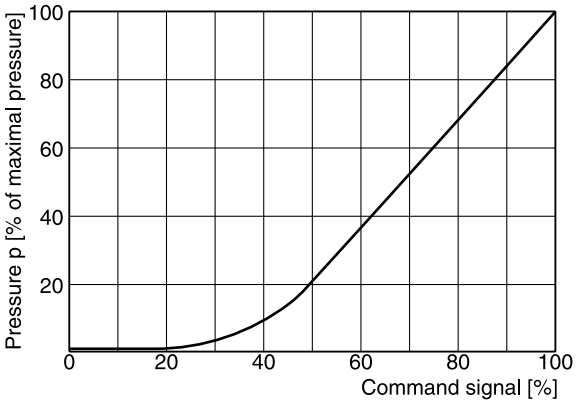

p/Q performance curves [1)]

R4V03

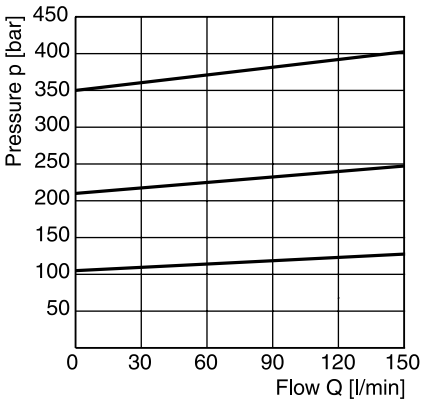

R4V06

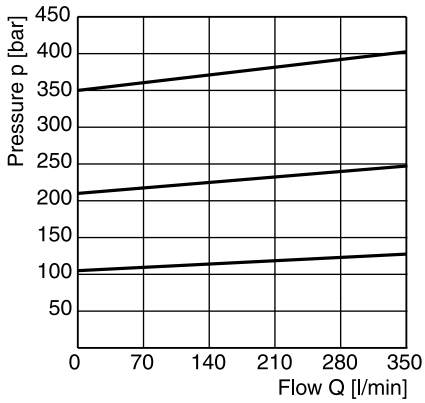

R4V10

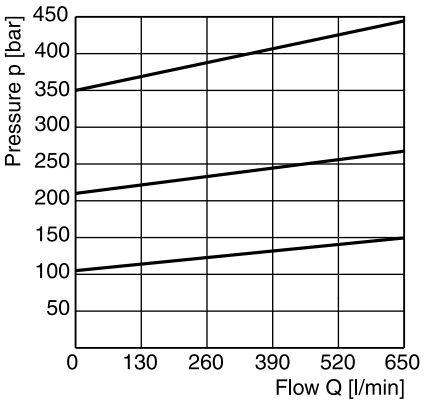

10

Minimum pressure curve [1)]

R4V03

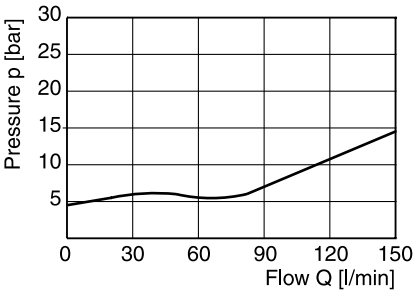

R4V06

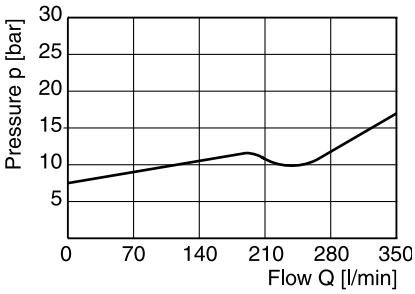

R4V10

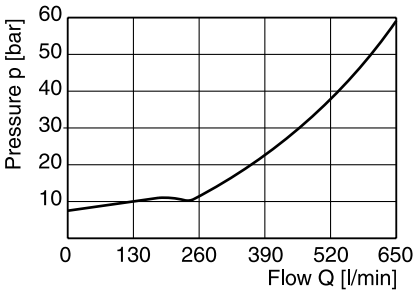

All characteristic curves measured with HLP46 at 50 °C.

[1)] The performance curves are measured with external drain. For internal drain the tank pressure has to be added to curve.

T-body

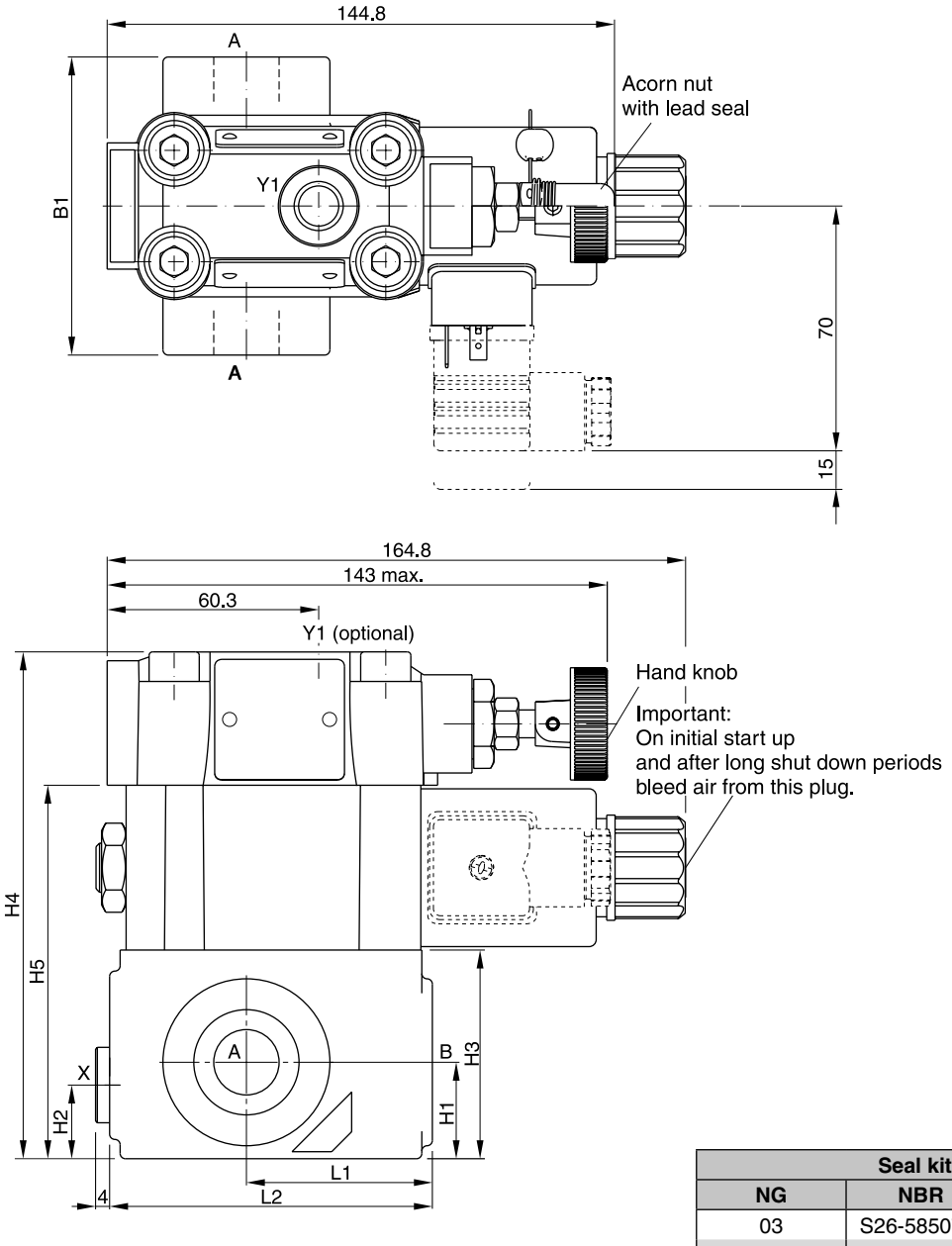

Seal kits		
NG	**NBR**	**FPM**
03	S26-58507-0	S26-58507-5
06	S26-58475-0	S26-58475-5
Prop. section P2*	S26-58473-0	S26-58473-5

NG	Body	B1	H1	H2	H3	H4	H5	L1	L2
03	T-body	85	27.5	21	59.5	144.5	106.5	53	92
06	T-body	136	38	28	93	178	140	66.5	117.5

Ports	Function	Port size	
		R4V03*P2 T-body	R4V06*P2 T-body
A	pressure (inlet)	G½ "	G1 "
B	tank (outlet)	G½ "	G1 "
X [1)]	ext. remote control or vent connection	G¼ "	G¼ "
Y1 [2)]	external drain	G¼ "	G¼ "

* Please combine seal kit of one size with seal kit of prop. section for complete seal kit.
[1)] Closed when supplied.
[2)] Port Y1 is only available at drain line (code 2) external from the pilot head.

R4VP2 UK.indd 17.04.19

L-body

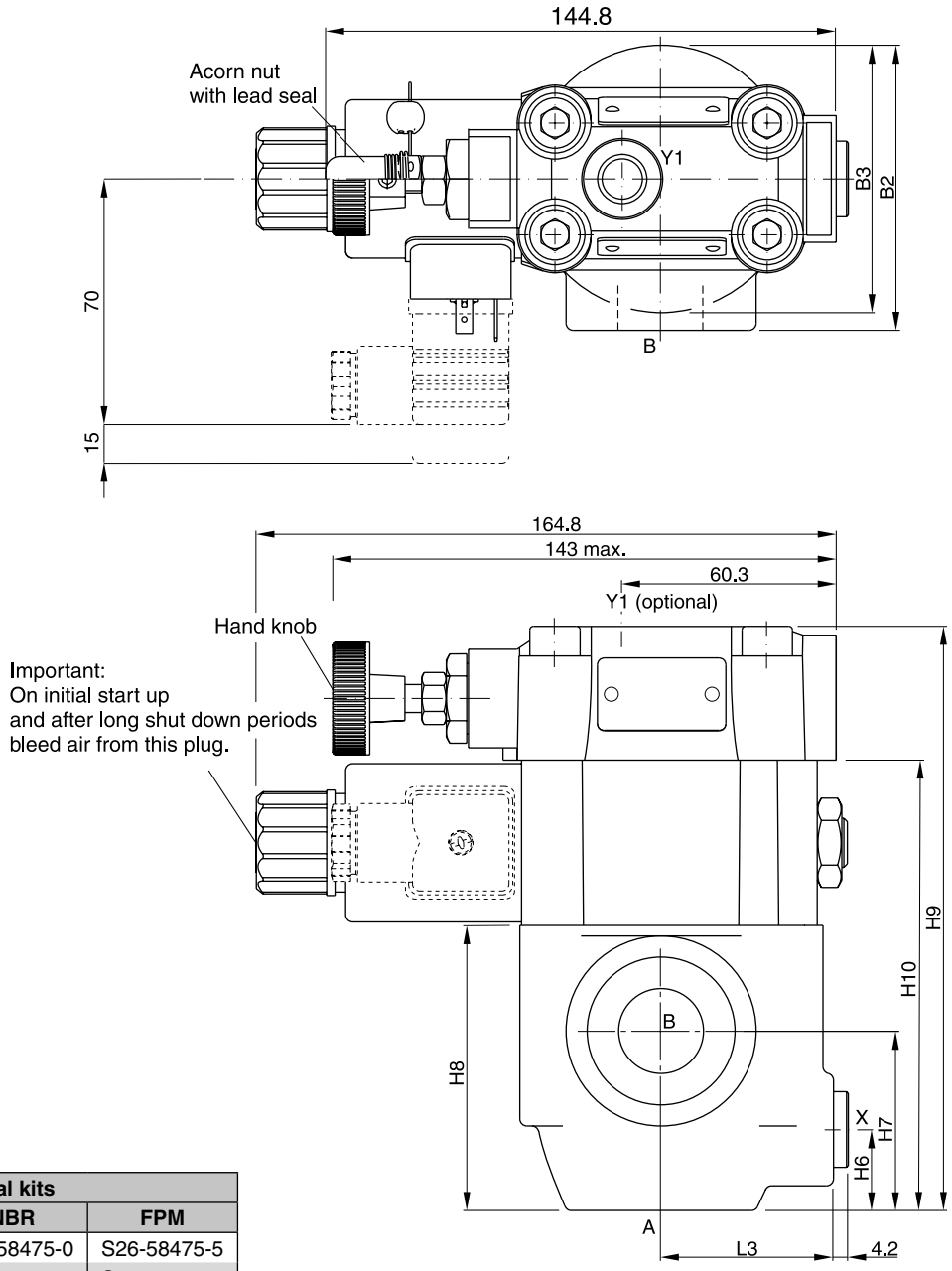

10

Seal kits		
NG	**NBR**	**FPM**
06	S26-58475-0	S26-58475-5
10	S26-58508-0	S26-58508-5
Prop. section P2*	S26-58473-0	S26-58473-5

NG	Body	B2	B3	H6	H7	H8	H9	H10	L3
06	L-body	81	76	23	51	81	166	128	49
10	L-body	120.7	85.8	38.1	50.8	96	181	143	49.8

Ports	Function	Port size	
		R4V06 L-body	R4V10 L-body
A	pressure (inlet)	G¾ "	G1¼ "
B	tank (outlet)	G¾ "	G1¼ "
X [1]	ext. remote control or vent connection	G¼ "	G¼ "
Y1 [2]	external drain	G¼ "	G¼ "

* Please combine seal kit of one size with seal kit of prop. section for complete seal kit.
[1] Closed when supplied.
[2] Port Y1 is only available at drain line (code 2) external from the pilot head.

Proportional pressure reducing valves series R4R*P2 are based on the mechanically adjusted series R4R. The additional proportional unit between the mechanical pilot valve and the main stage allows continuous pressure adjustment.
The optimum performance can be achieved in combination with the digital amplifier module PCD00A-400.

Features

- Continuous adjustment by proportional solenoid
- Normally closed to avoid undesired motion
- 2 interfaces
  - L-body (R4R06-G¾", R4R10-G1¼")
  - T-body (R4R03-G½", R4R06-G1")
- 3 pressure stages
- With mechanical maximum pressure adjustment



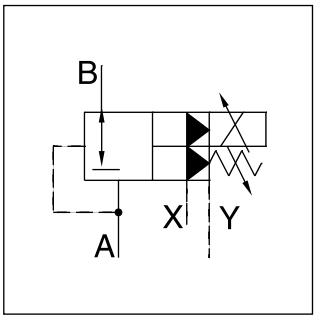

R4R10*P2 L-body

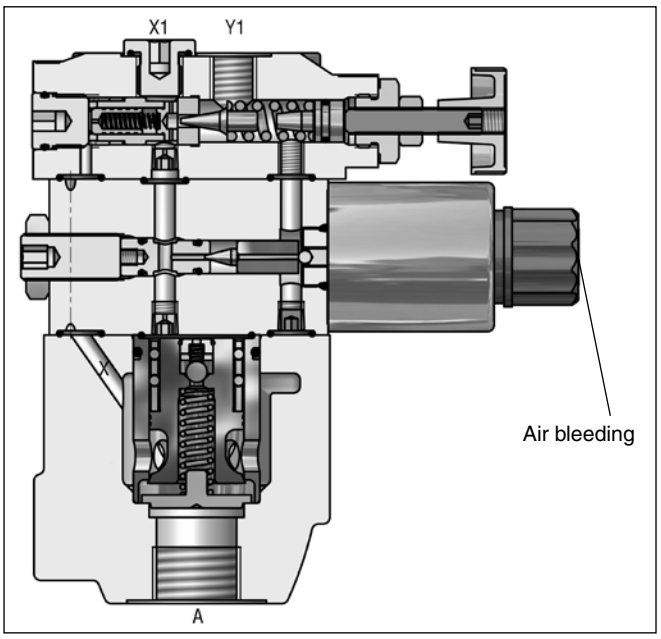

R4R06*P2 L-body

Ordering code

R4R	☐	–	5	☐	☐	☐	2	P2	G0R	B	☐	☐
Pressure reducing valve	Nominal size		Max. pressure 350 bar	Body	Pressure stages	Adjust-ment	Drain line ext. from pilot head (Y1)	Proportional pressure control	Solenoid voltage 12 V=	Design series	Seal	Options

Code	Nominal size
03	NG10 (G½")
06	NG25 (G1" - T-body, G¾" - L-body)
10	NG32 (G1¼")

Code	Body
6	R4R03 T-body R4R06 T-body
D	R4R06 L-body R4R10 L-body

Code	Seal
1	NBR
5	FPM

Code	Adjustment
1	Hand knob
3	Acorn nut with lead seal

Code	Pressure stages
1	up to 105 bar
3	up to 210 bar
5	up to 350 bar

10

Technical data

General						
Design			T-body		L-body	
Size			**03 (½")**	**06 (1")**	**06 (¾")**	**10 (1¼")**
Mounting			Threaded body			
Mounting position			unrestricted			
Ambient temperature		[°C]	-20...+60			
MTTF$_D$ value		[years]	75			
Weight		[kg]	5.0	5.1	7.4	8.4
Hydraulic						
Max. operating pressure		[bar]	Ports A, B and X up to 350; Port Y depressurized			
Pressure stages		[bar]	105, 210, 350			
Nominal flow		[l/min]	60	200	200	450
Fluid			Hydraulic oil according to DIN 51524			
Fluid temperature		[°C]	-20...+70 (NBR: -25...+70)			
Viscosity,	permitted	[cSt]/[mm²/s]	20...400			
	recommended	[cSt]/[mm²/s]	30...80			
Filtration			ISO 4406 (1999) 18/16/13			
Electrical (prop. solenoid)						
Duty ratio		[%]	100			
Protection class			IP65 in accordance with EN 60529 (with correctly mounted plug-in connector)			
Nominal voltage		[V]	12 =			
Max. current		[A]	2.3			
Coil resistance		[Ohm]	4 at 20 °C			
Solenoid connection			Connector as per EN175301-803			
Power amplifier			PCD00A-400			

Command/pressure curve

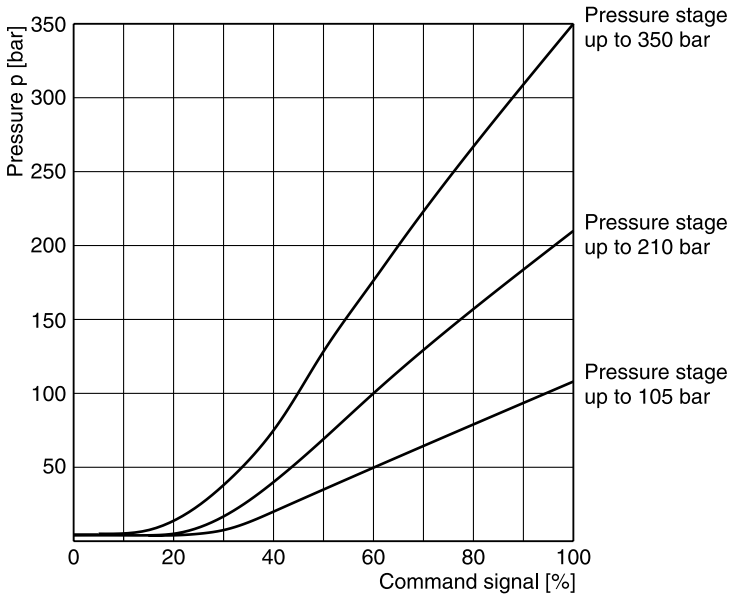

All characteristic curves measured with HLP46 at 50 °C.

Reduced pressure pA versus flow Q
R4R03 [1)]

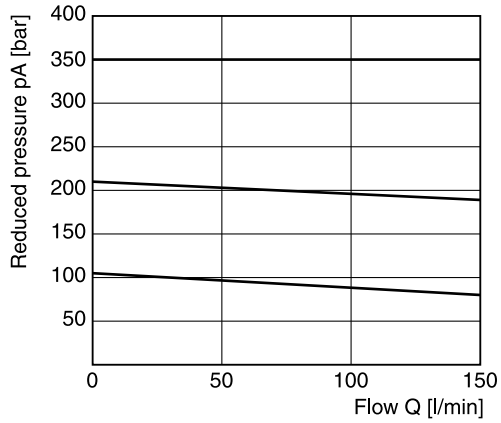

Minimum pressure curve

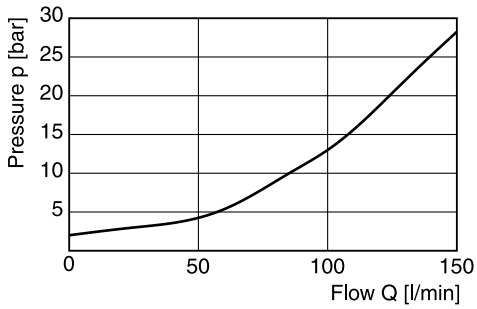

Reduced pressure pA versus flow Q
R4R06 [1)]

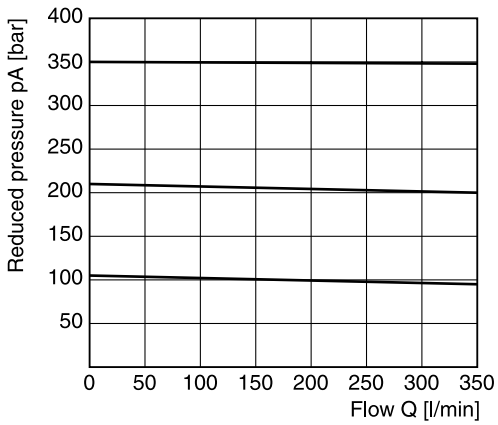

Minimum pressure curve

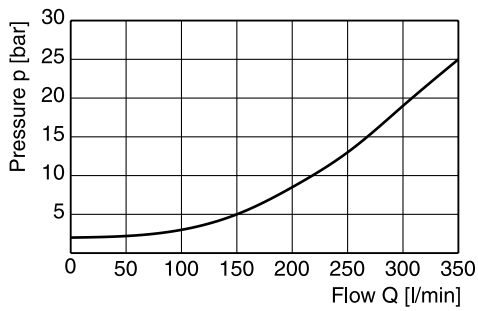

Reduced pressure pA versus flow Q
R4R10 [1)]

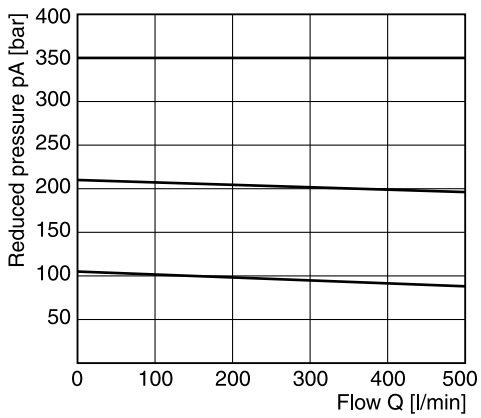

Minimum pressure curve

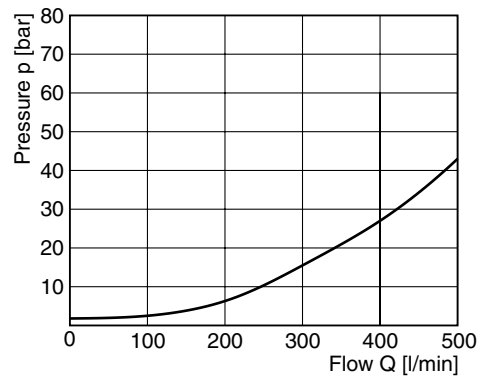

All characteristic curves measured with HLP46 at 50 °C.

[1)] Measured at 350 bar primary pressure pB.

T-body

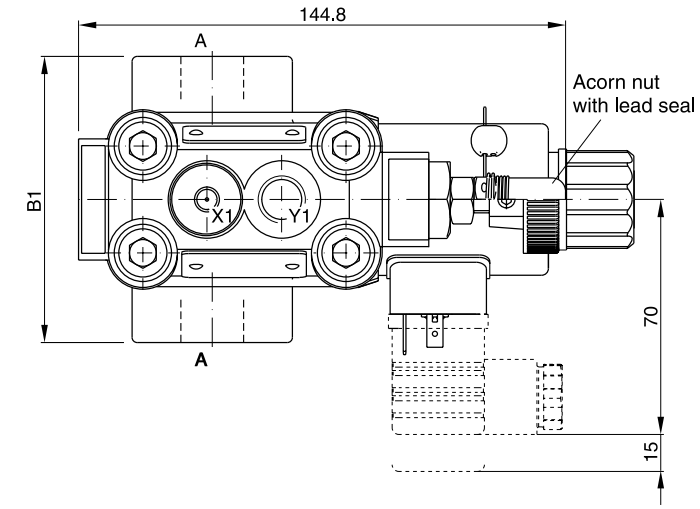

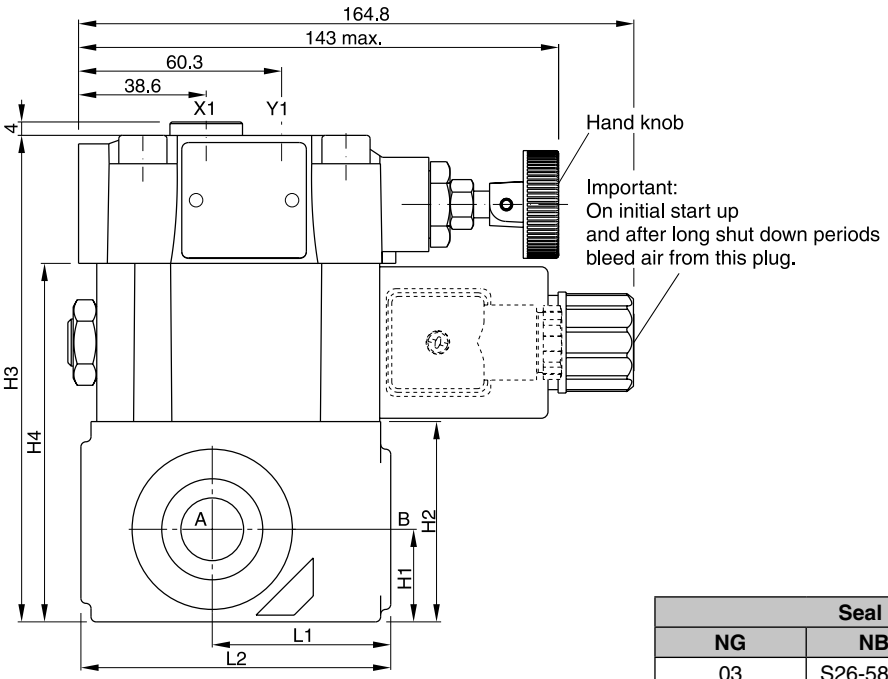

Seal kits		
NG	**NBR**	**FPM**
03	S26-58507-0	S26-58507-5
06	S26-58475-0	S26-58475-5
Prop. section P2*	S26-58473-0	S26-58473-5

NG	Body	B1	H1	H2	H3	H4	L1	L2
03	T-body	85	27.5	59.5	144.5	106.5	53	92
06	T-body	136	38	93	178	140	66.5	117.5

Ports	Function	Port size	
		R4V03*P2 T-body	**R4V06*P2 T-body**
B	pressure (inlet)	G½ "	G1 "
A	pressure (outlet)	G½ "	G1 "
X1 [1)]	ext. remote control or vent connection	G¼ "	G¼ "
Y1	external drain	G¼ "	G¼ "

* Please combine seal kit of one size with seal kit of prop. section for complete seal kit.
[1)] Closed when supplied.

L-body

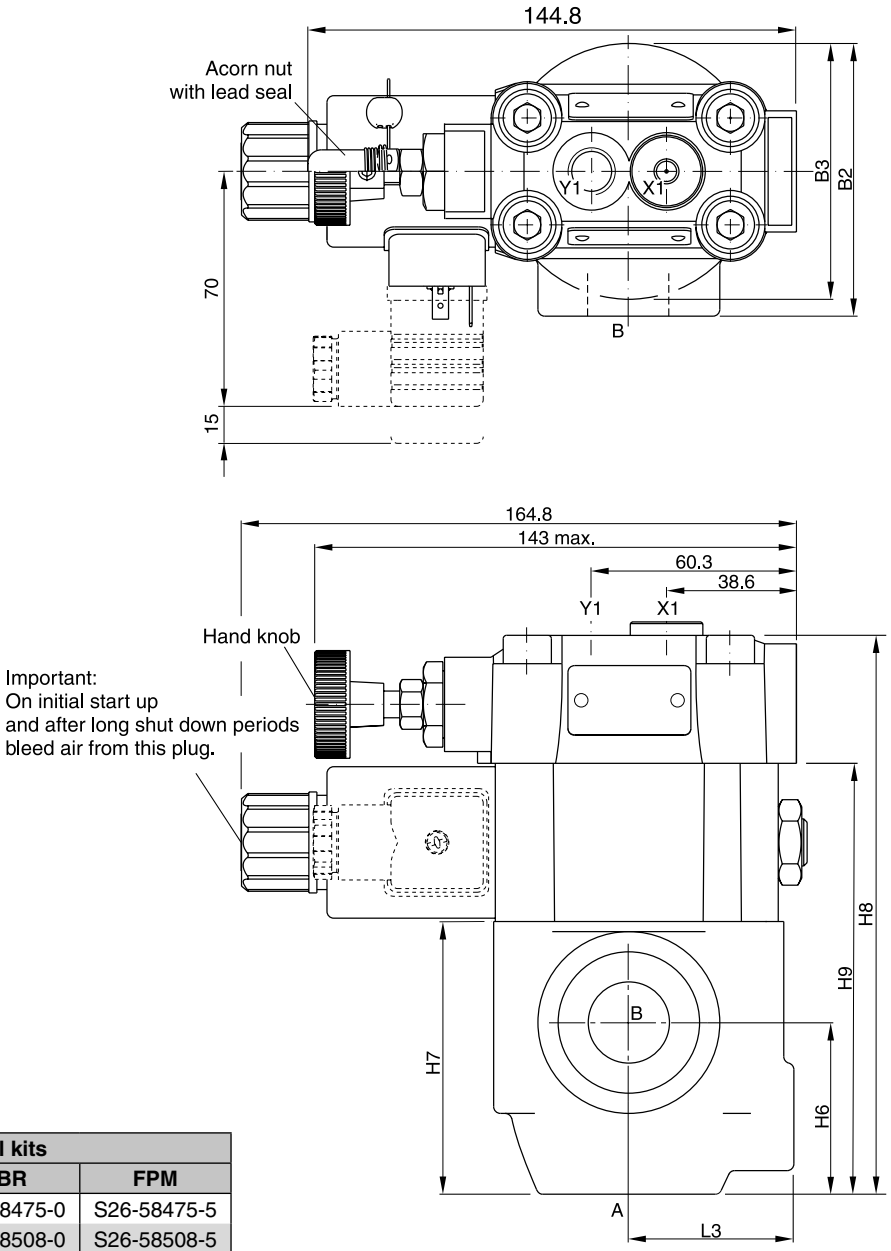

Seal kits		
NG	**NBR**	**FPM**
06	S26-58475-0	S26-58475-5
10	S26-58508-0	S26-58508-5
Prop. section P2*	S26-58473-0	S26-58473-5

NG	Body	B2	B3	H6	H7	H8	H9	L3
06	L-body	81	76	51	81	166	128	49
10	L-body	120.7	85.8	50.8	96	181	143	49.8

Ports	Function	Port size	
		R4V06*P2 L-body	R4V10*P2 L-body
B	pressure (inlet)	G¾ "	G1¼ "
A	pressure (outlet)	G¾ "	G1¼ "
X1 [1)]	ext. remote control or vent connection	G¼ "	G¼ "
Y1	external drain	G¼ "	G¼ "

* Please combine seal kit of one size with seal kit of prop. section for complete seal kit.
[1)] Closed when supplied.

Seat valves series D4S are designed for directional control functions. A large variety of poppets, springs and covers – including shuttle valves, stroke limiters, solenoid valves (VV01) and position control – allows to design individual hydraulic solutions for nominal flow up to 600 l/min.

A complete program is offered under the Parker brand:
subplate mounted valves (D4S - chapter 6),
SAE flange valves (D5S - chapter 9),
pipe mounted valves (D4S - chapter 10),
slip-in cartridges (CAR - on request).



D4S10 L-body

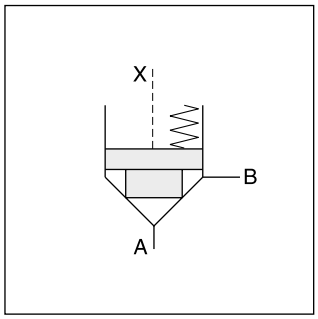

Features

- Leak-free seat valve design
- 2 body designs
  - L-body (2-port)
  - T-body (3-port)
- Numerous pilot options
- 4 port sizes
  - G ½", G 1" for T-body
  - G ¾", G 1 ¼" for L-body
- 6 poppet types

D4S06 L-body

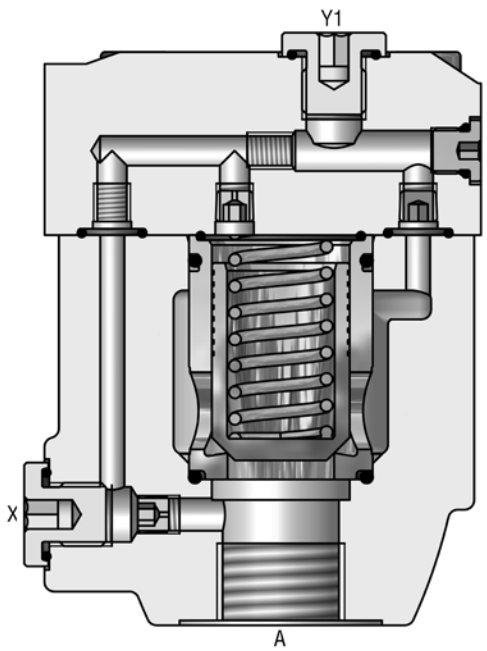

10

D4S	□	–	□	□	□	□	□	□	□	□	B	□	□
Seat valve	Nominal size		Body	Pilot connection	Cap version	Sleeve	Spool type	Spring	Switching type	Solenoid voltage	Design series	Seals	Options

Code	Port size
03	NG10 (CAR4 build-in)
06	NG25 (CAR2 build-in)
10	NG32 (CAR2 build-in)

Code	Body	Ports
6	D4S03 T-body D4S06 T-body	A, B = G½"; X, Y1 = G¼" A, B = G1"; X, Y1 = G¼"
D	D4S06 L-body D4S10 L-body	A, B = G¾"; X, Y1 = G¼" A, B = G1¼"; X, Y1 = G¼"

Code	Pilot oil line in body		
		A-X	B-Y
1	internal from A	⊖	○
2	external from X	●	○

Code	Ports	X	Y	Z	X-Y	Y1	VV01
	Standard						
1	Pilot oil = pilot drain	○	●	⊖	○	●	—
C	Pilot oil = pilot drain	●	○	⊖	○	●	—
	With solenoid valve (VV01)						
2	Ext. PD from cap	○	○	⊖	●	○	●
6	Internal pilot drain	○	○	⊖	●	●	○
	With stroke limiter (not for D4S03)						
3	Pilot oil = pilot drain	⊖	●	—	—	—	—
4	Pilot oil = pilot drain	●	⊖	—	—	—	—

○ open bore ● closed bore ⊖ orifice Ø 1.2

Code	Sleeve
1	AA = 95 %, AB = 5 %
3	AA = 60 %, AB = 40 %

Code	Size	Poppet type	Sleeve
1	03, 06,10	With closed bottom and 15° chamfer (pZ max. = pA +20 bar	1
2	03	With 0.8 dia. orifice at the bottom and 15° chamfer	1
	06, 10	With 1.2 dia. orifice at the bottom and 15° chamfer	1
4	03, 06,10	With closed bottom and 45° chamfer	1, 3
A[1)]	06, 10	Safety spool (for position control only)	3
B[1)]	06, 10	Throttle spool, 10° chamfer	3
C[1)]	06, 10	Throttle spool, 3° chamfer	3

Code	Options
omit	Standard
013	Cover for position control

Code	Seals
1	NBR
5	FPM

Code	Solenoid voltage
omit	Standard w/o vent function
G0R	12 V=
G0Q	24 V=
GAR [3)]	98 V=
GAG [3)]	205 V=
W30	110 V / 50 Hz; 120 V / 60 Hz
W31	230 V / 50 Hz; 240 V / 60 Hz

Code	Switching type	
omit	Standard w/o vent function	
09	VV01 with manual override	de-energized: open
10	VV01 without manual override	
11	VV01 with manual override	de-energized: closed
12	VV01 without manual override	
CA	Shuttle valve	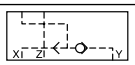
DA	Shuttle valve	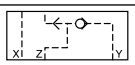
CB	VV01 code 09 and shuttle valve code CA	
CD	VV01 code 11 and shuttle valve code CA	
DB	VV01 code 09 and shuttle valve code DA	
DD	VV01 code 11 and shuttle valve code DA	
BH	VV01 code 10 and shuttle valve code CA and position control [2)] with amplifier	
BK	VV01 code 12 and shuttle valve code CA and position control [2)] with amplifier	
BN	VV01 code 10 and shuttle valve code DA and position control [2)] with amplifier	
BQ	VV01 code 12 and shuttle valve code DA and position control [2)] with amplifier	
BC	VV01 code 10 and position control [2)] with amplifier	
BE	VV01 code 12 and position control [2)] with amplifier	
BA	Position control [2)] with amplifier	
BF	Position control [2)] with amplifier and shuttle valve code CA	
BL	Position control [2)] with amplifier and shuttle valve code DA	

Code	Spring (approx. cracking pressure [bar])					
	Sleeve Code 1		Sleeve Code 3			
	A -> B		A -> B		B -> A	
	D4S03	D4S06/10	D4S03	D4S06/10	D4S03	D4S06/10
1	2.8	3.5	6.5	6.5	9.5	11.0
2	0.5	0.5	1.0	1.0	1.5	1.7
3	0.3	0.3	0.6	0.6	0.9	1.0
4	2.2	2.2	4.0	3.5	5.5	6.0
5	—	9.0	—	16.0	—	28.0
6	1.2	1.2	2.0	2.2	3.0	3.8
7	3.0	—	8.0	—	12.0	—

Examples see end of chapter

[1)] Springs 2, 3 and 6 only.
[2)] Position control for D4S06/10 only. Spring 2 or 4.
Spool A and sleeve 3. Valve open: proximity switch damped.
[3)] To be used in combination with rectifier plugs at 120 VAC / 230 VAC power supply.

Technical data

General							
Design			**T-body**		**L-body**		
Size			**03 (½")**	**06 (1")**	**06 (¾")**	**10 (1¼")**	
Mounting			Threaded body				
Mounting position			unrestricted				
Ambient temperature		[°C]	-20...+60				
$MTTF_D$ value		[years]	150				
Weight	D4S T-body	[kg]	3.2	6.6	—	—	
	D4S L-body	[kg]	—	—	3.3	5.6	
Hydraulic							
Max. operating pressure		[bar]	Ports A, B up to 350; Port Y 140 (with VV01)				
Nominal flow		[l/min]	180	360	360	600	
Fluid			Hydraulic oil according to DIN 51524				
Fluid temperature		[°C]	-20...+70 (NBR: -25...+70)				
Viscosity,	permitted	[cSt]/[mm²/s]	20...400				
	recommended	[cSt]/[mm²/s]	30...80				
Filtration			ISO 4406 (1999); 18/16/13				
Electrical (solenoid)							
Duty ratio			100 % ED; CAUTION: coil temperature up to 150 °C possible				
Protection class			IP65 in accordance with EN 60529 (with correctly mounted plug-in connector)				
		Code	G0R	G0Q	GAR	GAG	W30	W31
Supply voltage		[V]	12 V =	24 V =	98 V =	205 V =	110 at 50 Hz 120 at 60 Hz	230 at 50 Hz 240 at 60 Hz
		[V]						
Tolerance supply voltage		[%]	±10	±10	±10	±10	±5	±5
Current consumption	hold	[A]	2.72	1.29	0.33	0.13	0.6 / 0.55	0.3 / 0.27
	in rush	[A]	2.72	1.29	0.33	0.13	0.6 / 0.55	0.3 / 0.27
Power consumption	hold	[W]	2.72	1.29	0.33	0.13	2.5 / 2.4	1.25 / 1.2
	in rush	[W]	32.7	31	31.9	28.2	70/70 VA	70/70 VA
Solenoid connection			Connector as per EN175301-803, solenoid identification as per ISO 9461					
Wiring min.		[mm²]	3 x 1.5 recommended					
Wiring length max.		[m]	50 recommended					

D4S pilot configuration

L-body (2-port)	T-body (3-port)
Standard	
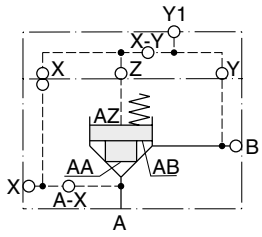	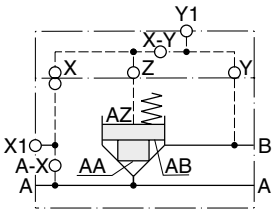
with vent valve VV01	
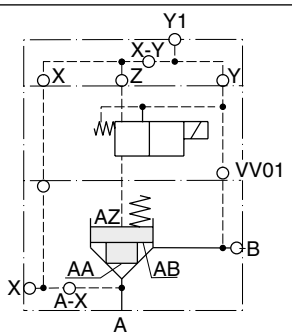	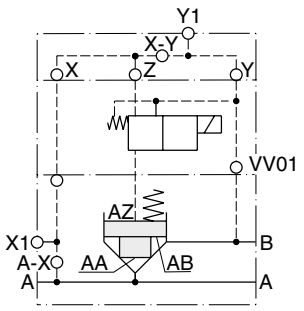

Δp/Q performance curves

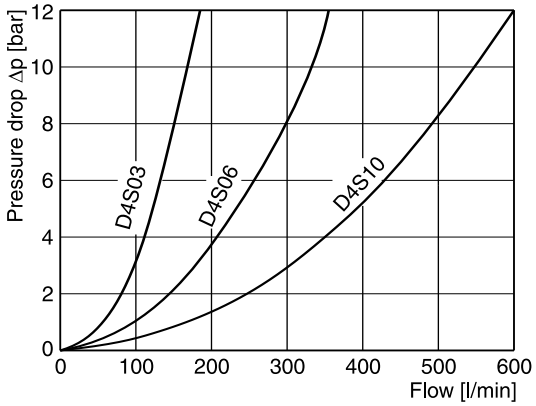

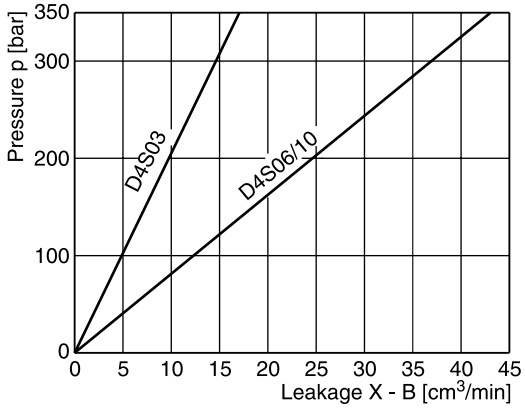

All characteristic curves measured with HLP46 at 50 °C.

Selection of cartridges

Sleeve 1, poppet 1	Sleeve 1, poppet 2	Sleeve 1, poppet 4	Sleeve 3, poppet 4	Sleeve 3, poppet A	Sleeve 3, poppet B/C
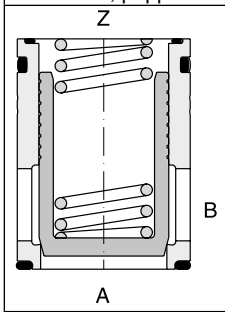	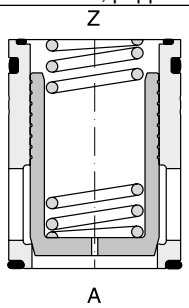	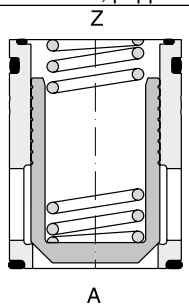	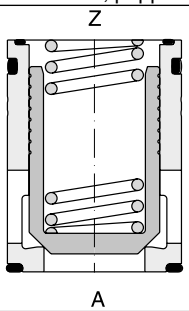	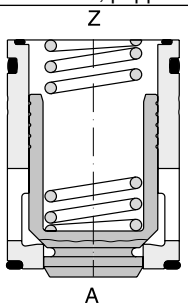	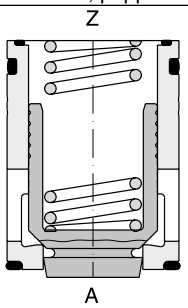
1 : 1.05 $A_A = 0.95\ A_C$ $A_B = 0.05\ A_C$ 15° chamfer	1 : 1.05 $A_A = 0.95\ A_C$ $A_B = 0.05\ A_C$ 15° chamfer orifice	1 : 1.05 $A_A = 0.95\ A_C$ $A_B = 0.05\ A_C$ 45° chamfer	1 : 1.67 $A_A = 0.6\ A_C$ $A_B = 0.4\ A_C$ 45° chamfer	1 : 1.67 $A_A = 0.6\ A_C$ $A_B = 0.4\ A_C$ 45° chamfer safety spool	1 : 1.67 $A_A = 0.6\ A_C$ $A_B = 0.4\ A_C$ 45° chamfer throttle spool

D4S 03/06 T-body

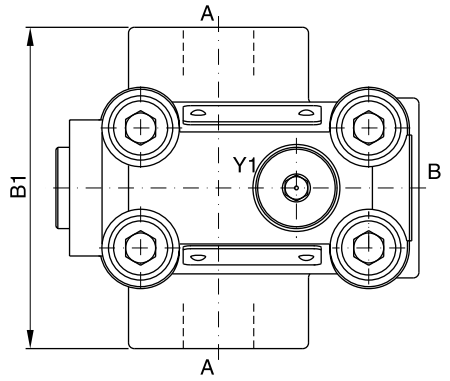

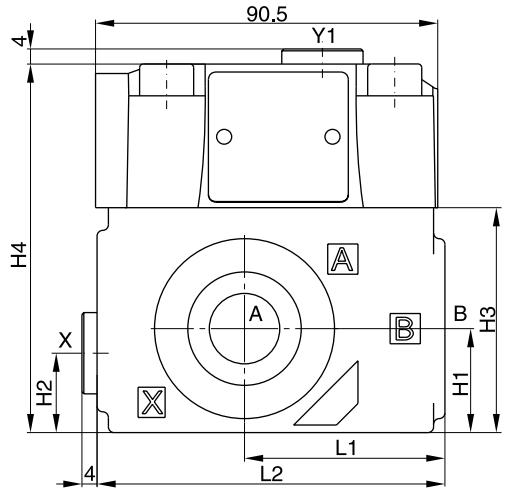

D4S 06/10 L-body

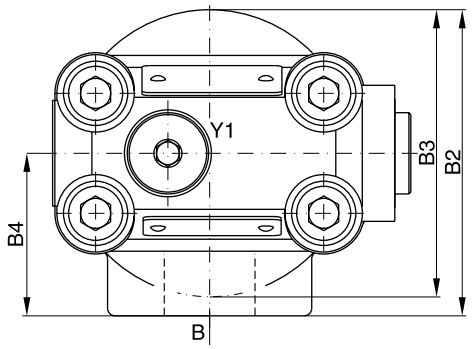

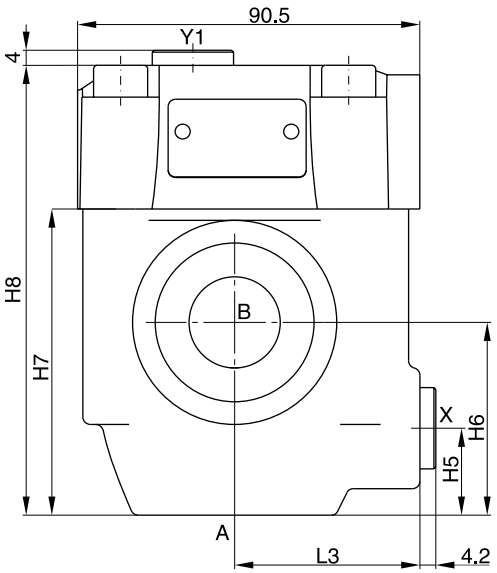

Seal kits		
NG	**NBR**	**FPM**
03	S26-58507-0	S26-58507-5
06	S26-58475-0	S26-58475-5
10	S26-58508-0	S26-58508-5

Size	L1	L2	B1	H1	H2	H3	H4
03 (T-body)	53	92	85	27.5	21	59.5	97.5
06 (T-body)	66.5	117.5	136	38	28	93	131

Size	L3	B2	B3	B4	H5	H6	H7	H8
06 (L-body)	49	81	76	43	23	51	81	119
10 (L-body)	49.8	120.7	85.6	77.8	38.1	50.8	96	134

Ports	Function	Port size			
		D4S03 T-body	D4S06 L-body	D4S06 T-body	D4S10 L-body
A	inlet or outlet	G½"	G¾"	G1"	G1¼"
B	outlet or inlet	G½"	G¾"	G1"	G1¼"
X1	external pilot port	G¼"			
Y1	external drain [1]	G¼"			

[1] With VV01 only

D4S with VV01

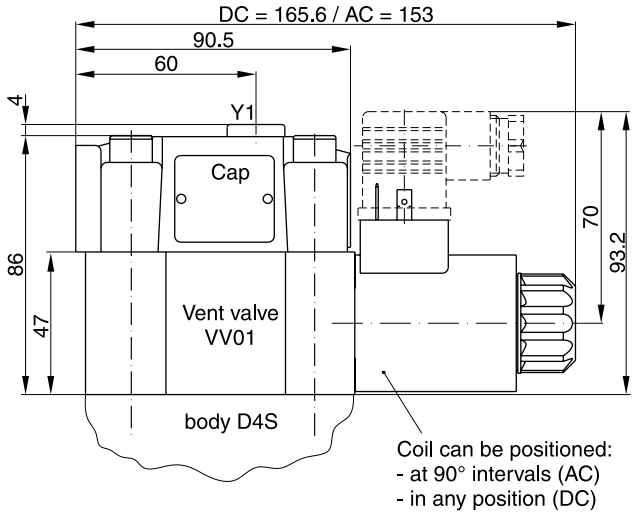

Seal kits	
NBR	**FPM**
DC solenoid	
S56-40609-0	S56-40609-5
AC solenoid	
S26-35237-0	S26-35237-5

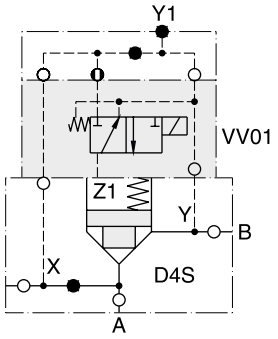

with manual override / without manual override

D4S..-.....09/10
Solenoid energized:
D4S blocked
Solenoid deenergized:
Flow from A-B or B-A

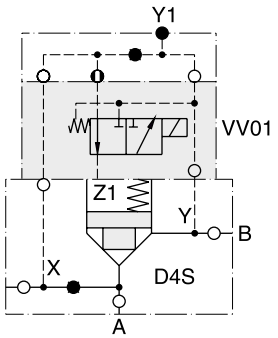

with manual override / without manual override

D4S..-.....11/12
Solenoid energized:
Flow from A-B or B-A
Solenoid deenergized:
D4S blocked

10

D4S position control

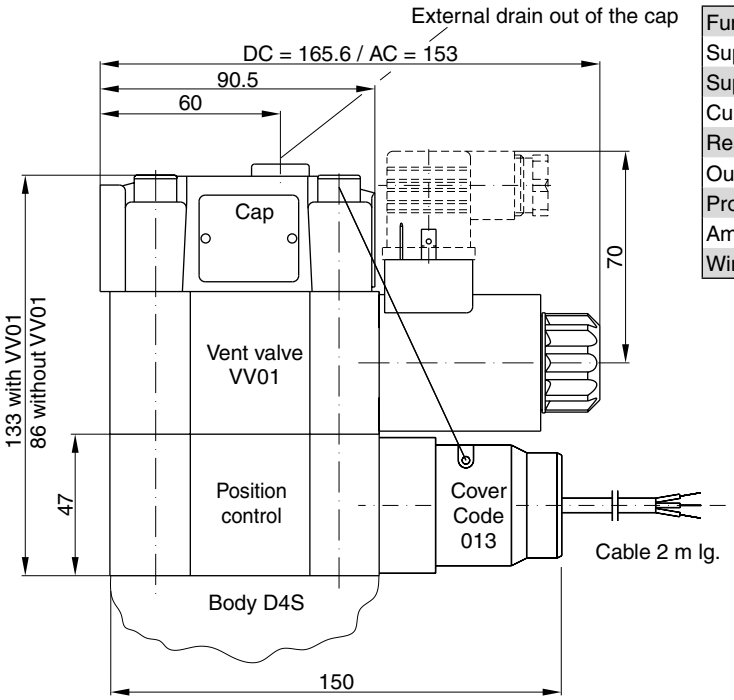

Function		PNP, contact
Supply voltage (Us)	[VDC]	10...30
Supply voltage ripple	[%]	≤ 10
Current consumption	[mA]	max. 8
Residual voltage L-signal	[V]	Us - 2.2 at I_{max}
Output current (I)	[mA]	≤ 200
Protection class		IP67
Ambient temperature	[C°]	-25...+70
Wire cross section	[mm²]	3 x 0.5

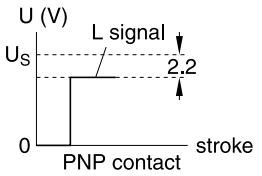

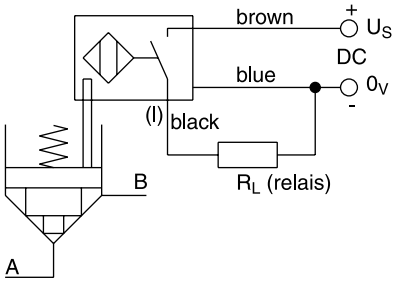

Position control by proximity switch (incl. amplifier)

Valve open: proximity switch activated.

This proximity switch is pressure proof and has no wearing parts.

Note

Position control for D4S06 and D4S10 only.

D4S stroke limiter

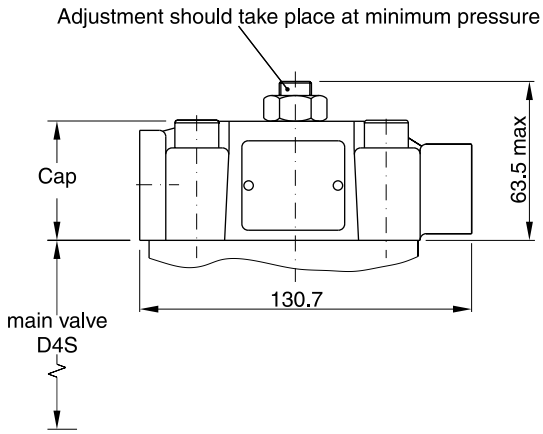

Example: D4S$^{06}_{10}$-.233B.

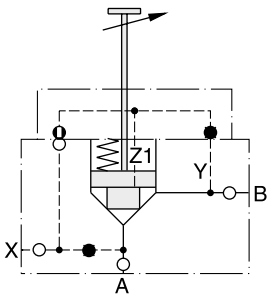

Note:

Stroke limiter not for use with D4S03, VV01, shuttle valve and positon control.

D4S direct operated

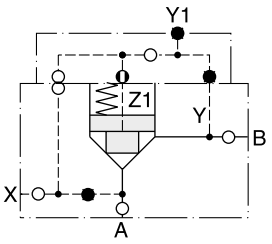

D4S..-.21
Pilot oil X = external

D4S with solenoid valve VV01

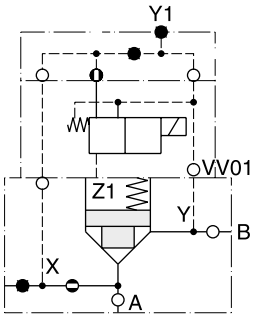

D4S..-.16... 09 10 11 12 with VV01
Pilot oil X = internal from A
Drain Y = internal to B

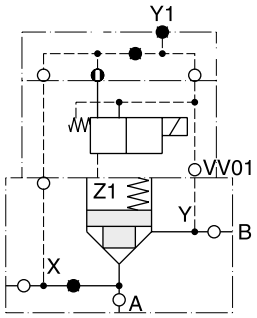

D4S..-.26... 09 10 11 12 with VV01
Pilot oil X = external
Drain Y = internal to B

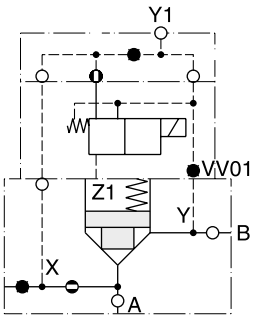

D4S..-.12... 09 10 11 12 with VV01
Pilot oil X = internal from A
Drain Y1 = external out of cap

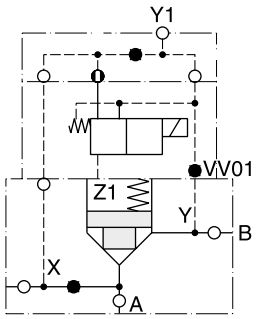

D4S..-.22... 09 10 11 12 with VV01
Pilot oil X = external
Drain Y1 = external out of cap

10

D4S with position control

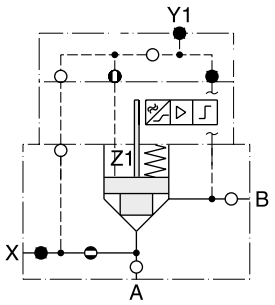

D4S..-.113A.BA
(with position control)

Pilot oil X = intern from A

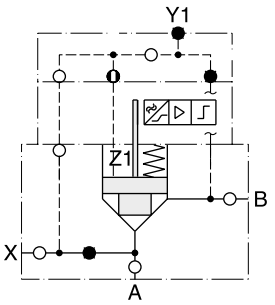

D4S..-.213A.BA
(with position control)

Pilot oil X = external

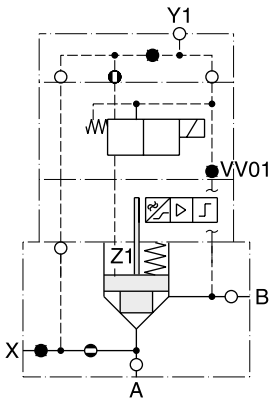

D4S..-.123A. BC / BE } with position control and VV01

Pilot oil X = intern from A
Drain Y1 = external out of cap

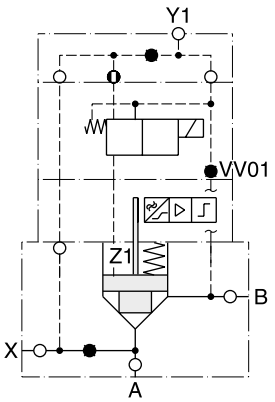

D4S..-.223A. BC / BE } with position control and VV01

Pilot oil X = external
Drain Y1 = external out of cap

10

D4S with stroke limiter

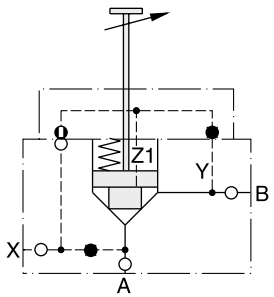

D4S..-.233B. with stroke limiter
Pilot oil X = external
(Note: for D4S06 and D4S10 only)

Manatrol needle valve, optional with 30° poppet, V-notch, or rectangular slot. The form of the throttle opening influences the accuracy of the flow setting, which depends on pressure and viscosity. The needle is made of stainless steel and corresponds to a ring gap in the valve body.

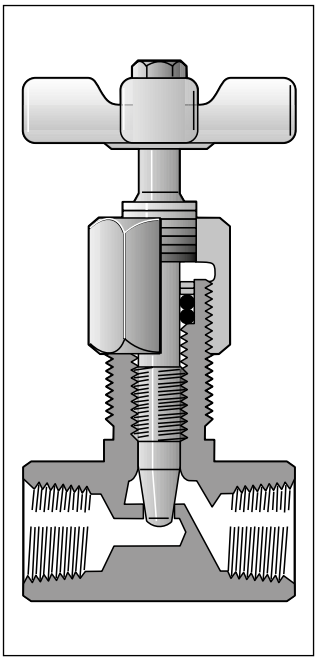



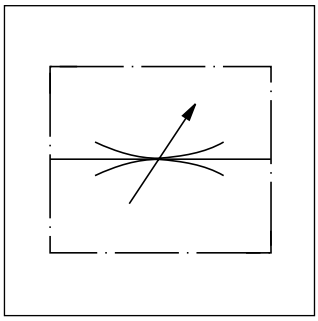

Δp/Q curves

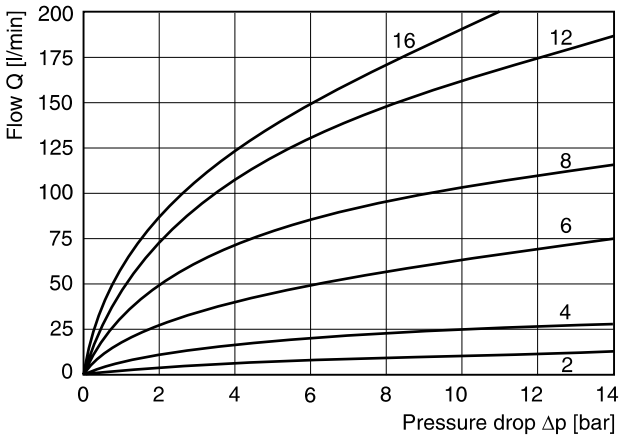

All characteristic curves measured with HLP46 at 50 °C.

$$\text{Flow rate } Q\ [l/min] = Kv \cdot \sqrt{\frac{\Delta p}{\gamma}}$$

Kv	from the table
Δp [bar]	
γ [kg/dm³]	= specific weight of the medium
(γ for mineral oil	= 0.85 - 0.9)

Ordering code

Thread type	Needle valve	Size and design	Body	Needle	Seal
	MV				

Code	Thread
omit	NPTF
9	**BSPP**

Straight way valve code	Size	Angle valve code
200	**1/8**	**261**
400	**1/4**	**461**
600	**3/8**	**661**
800	**1/2**	**861**
1200	**3/4**	**1261**
1600	**1**	**—**

Code	Seal
omit	**NBR**
V	FPM

Code	Needle
omit	**Standard with 30° taper**
2 [2]	Fine due to V-notch
3 [2]	Micro-fine due to rect. slot

Code	Body
S	**Steel**
B [1]	Brass

Bold letters =
Short-term availability

[1] Not for models MV 1200/1600 and design „61“
[2] Only for size 400

Technical data

Size	Max. pressure [bar]		Flow [l/min]	Max. cross.sect.	Kv factor valve	Weight [kg]
	steel	brass	Δp 10 bar	[cm²] Δp 10 bar	open	
200	350	140	11	0.07	3.5	0.13
400	350	140	25	0.14	6.3	0.31
600	350	140	65	0.37	18.5	0.54
800	350	140	105	0.55	27.5	0.95
1200	350	–	160	0.90	45.7	1.58
1600	210	–	190	1.10	54.6	1.9

Size and needle type	
200-2	7
200-3	2
400-2	11

MV*00 valve with connecting thread in-line

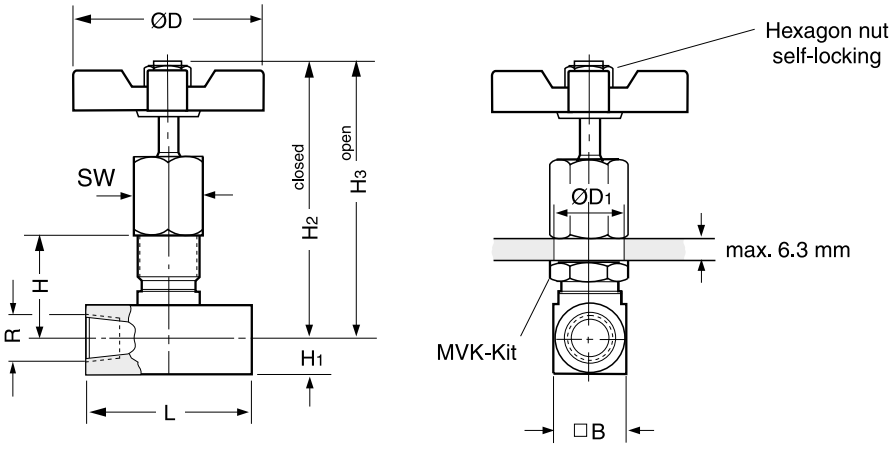

Size	R*	H	H3	H2	H1	B	ØD1	L	ØD	SW	MVK sets
2	⅛	24	69	64	8	16	15	38	45	15.7	MVK 2
4	¼	33	86	81	10.5	21	20	51	51	22.1	MVK 4
6	⅜	38	108	100	13	26	23	64	64	25.4	MVK 6
8	½	51	130	117	16	32	29	67	83	31.8	MVK 8
12	¾	54	142	128	19	38	36	83	98	41.2	MVK 12
16	1	60	147	133	22.5	45	36	108	98	41.2	MVK 16

MV*61 angle valve with connections at 90° angle

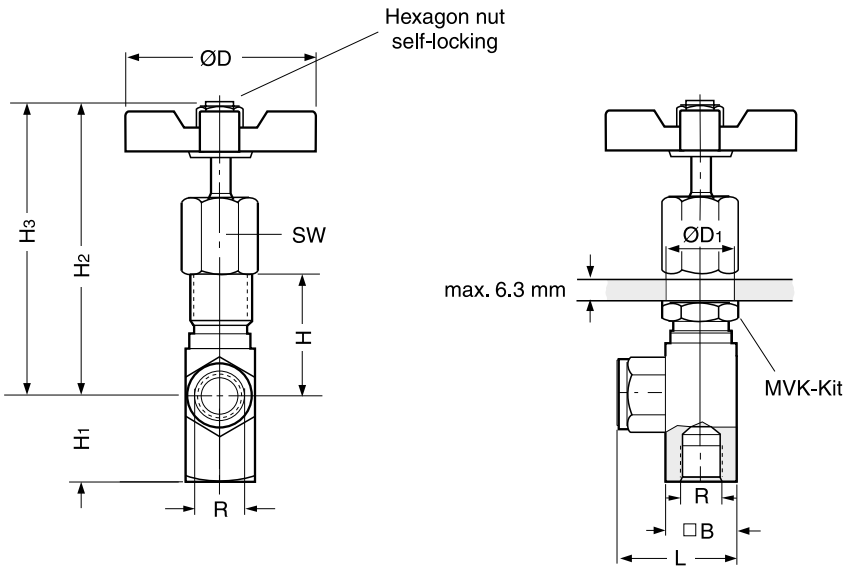

Size	R*	H	H3	H2	H1	B	ØD1	L	ØD	SW
2	⅛	27	72	67	20.6	16	15	27	45	15.7
4	¼	36	90	85	27.7	21	20	38	51	22.1
6	⅜	42	111	103	34.8	26	23	45	64	25.4
8	½	55	134	121	42.7	32	29	53	83	31.8
12	¾	59	147	133	41.1	38	36	64	98	41.2

* Pipe thread G or NPTF

Manatrol stop and throttle valves with 2-stage needle cone. Fine adjustment for the first stage can be achieved with 3 rotations of the adjustment knob. The second stage with normal throttle characteristics is achieved with 3 further rotations. A cylindrical needle with a rectangular slot is provided to reduce the viscosity effect for sizes 200 up to 600. The flow is dependent on pressure and viscosity.

$$\text{Flow rate } Q\ [\text{l/min}] = Kv \cdot \sqrt{\frac{\Delta p}{\gamma}}$$

Kv	from the table
Δp [bar]	
γ [kg/dm³]	= specific weight of the medium
(γ for mineral oil	= 0.85 - 0.9)

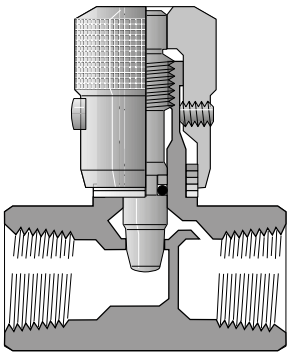



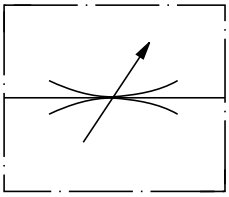

Specifications

Operating temperature	-40 °C to +121 °C

Ordering code

□	N	□	□	□	□	□
Thread type	Needle valve	Thread size	Body	Needle	Clamping screw	Seal

Code	Thread
omit	NPTF
9	**BSPP**

Code	Size
200	**1/8**
400	**1/4**
600	**3/8**
800	**1/2**
1200	**3/4**
1600	1

Code	Body
S	**Steel**
B	Brass

Code	Seal
omit	**NBR**
V	FPM

Code	Clamping screw
omit	**Hexagon socket**
F	With knurled knob
T	Tamper-proof

Code	Needle
omit	**Standard 2-stage needle**
4 [1]	Micro-fine hollow needle with slot

Bold letters =
Short-term availability

[1] Only for sizes 200 to 600

Technical data (only for standard 2 stage needle)

Size	Pressure [bar]		Flow [l/min]	Max. cross section	Kv factor valve	Weight [kg]
	Steel	Brass				
200	350	140	11	0.066	3.3	0.15
400	350	140	25	0.13	6.3	0.22
600	350	140	40	0.22	11.2	0.6
800	350	140	50	0.28	13.9	0.63
1200	350	140	120	0.70	35.4	1.04
1600	210	35	250	1.48	75	2.13

p/Q curves

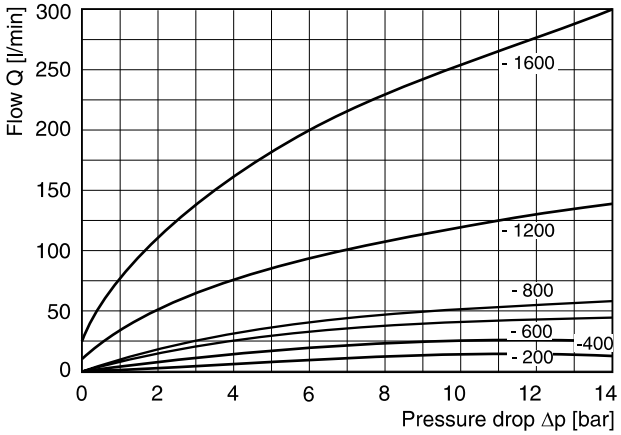

All characteristic curves measured with HLP46 at 50 °C.

Dimensions

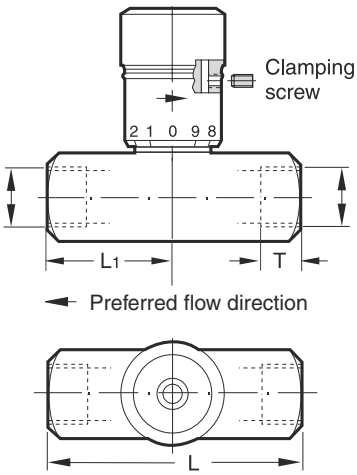

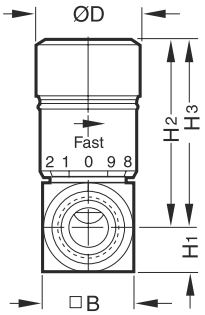

H_2 = closed
H_3 = open

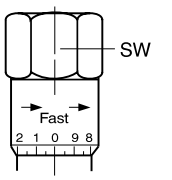

Hexagon adjusting knob, standard for size 1600

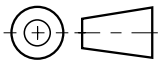

Size	R* Threads	H3	H2	H1	B	L1	L	ØD	SW
200	⅛	39	35	8	16	16	38	19	–
400	¼	46	40	10.5	21	25	51	21	–
600	⅜	55	49	13	26	32	64	25	–
800	½	69	61	16	32	33	67	30	–
1200	¾	86	71	19	38	41	83	35	–
1600	1	124	107	22.5	45	54	108	–	47.8

* G or NPTF

Manatrol throttle check valves of series F with fine adjustment of the flow rate for a defined flow direction. The built-in check valve allows free flow in the counter direction with low flow resistance. A 2-stage needle provides very exact setting of smaller flow rates with the first three rotations of the adjustment knob. After 3 more rotations, the valve is completely open. The valve setting can be locked with the locking screw.



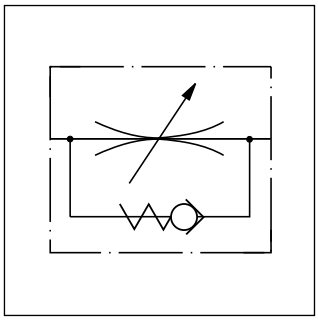

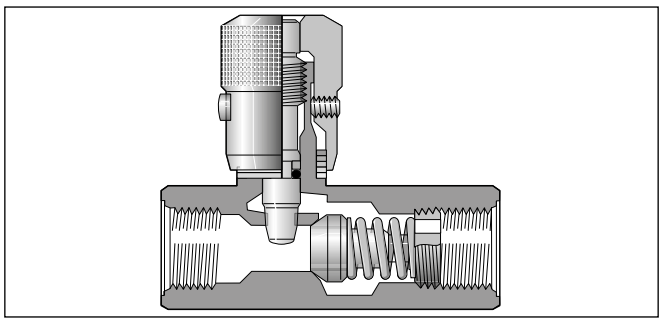

$$\text{Flow rate Q [l/min]} = Kv \cdot \sqrt{\frac{\Delta p}{\gamma}}$$

Kv	from the table
Δp [bar]	
γ [kg/dm³]	= specific weight of the medium
(γ for mineral oil	= 0.85 - 0.9)

Specifications

Return check poppet Nominal cracking pressure	0.4 bar
Operating temperature	-40 °C to +121 °C

Ordering code

Thread type	Throttle check valve	Thread size	Body	Needle	Clamping screw	Seal
	F					

Code	Thread
omit	NPTF
9 [1]	**BSPP**

Code	Size
200	**1/8**
400	**1/4**
600	**3/8**
800	**1/2**
1200	**3/4**
1600	**1**
2000	1¼
2400	1½
3200	2

Code	Seal
omit	**NBR**
V	FPM

Code	Clamping screw
omit	**Hexagon socket**
F	With knurled knob
T	Tamper-proof

Code	Needle
omit	**Standard 2-stage needle**
4 [3]	Micro-fine hollow needle with slot

Code	Body
S	**Steel**
B [2]	Brass

[1] Not for size 3200.
[2] Only for sizes 200 to 1600.
[3] Only for sizes 200 to 600.

Bold letters =
Short-term availability

Technical data

Size	Pressure [bar]		Max. flow [l/min Δp10bar]	Throttle surface [cm²]	Throttle v. open Kv factor	Weight [kg]	
	Steel	Brass				Steel	Brass
200	350	140	11	0.066	3.3	0.13	0.13
400	350	140	25	0.13	6.3	0.23	0.23
600	350	140	40	0.22	11.2	0.31	0.31
800	350	140	50	0.28	14	0.67	0.68
1200	210	140	120	0.70	35.4	1.17	1.18
1600	210	35	250	1.48	75	2.31	2.32
2000	210	–	250	1.48	75	3.67	–
2400	210	–	250	1.48	75	4.62	–
3200	210	–	250	1.48	75	7.78	–

Controlled flow vs. pressure drop needle fully open

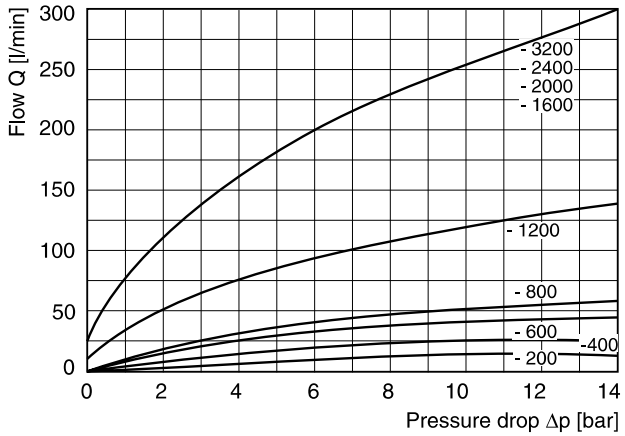

Free flow vs. pressure drop needle fully open

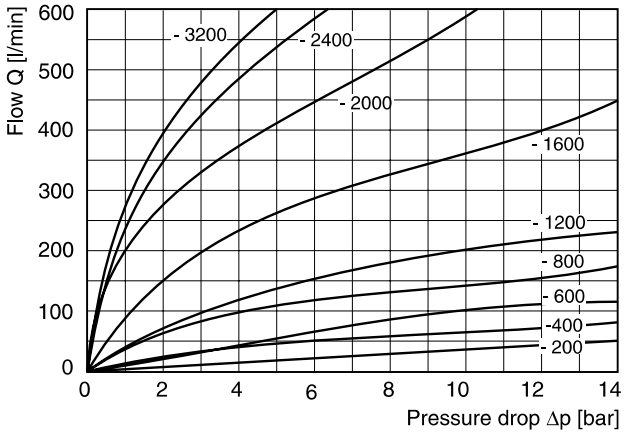

All characteristic curves measured with HLP46 at 50 °C.

Dimensions

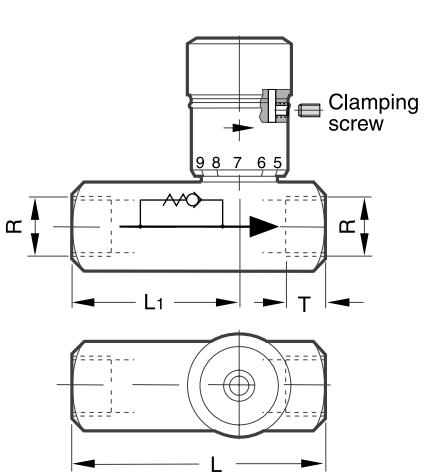

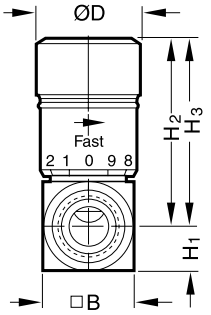

H_2 = closed
H_3 = open

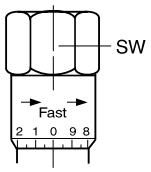

Hexagon adjusting knob, standard for sizes 1600 to 3200

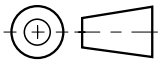

Size	R*	H3	H2	H1	B	L1	L	ØD	SW	T
200	⅛	39	35	8	16	36	51	19	-	9
400	¼	46	40	10.5	21	43	67	21	-	13
600	⅜	55	49	13	26	45	70	25	-	13
800	½	69	61	16	32	57	87	30	-	16
1200	¾	86	71	19	38	65	99	35	-	17
1600	1	124	107	22.5	45	83	127	-	47.8	20
2000	1 ¼	130	114	29	58	99	143	-	-	21.5
2400	1 ½	137	120	35	70	114	143	-	-	23.5
3200	2	146	130	44.5	89	134	165	-	-	25

* Pipe thread G or NPTF

Manatrol 2 way flow control valves for pressure compensated regulation of the flow rate. As a consequence of pressure changes, the set value can vary by ± 5 % within the tolerance range. Viscosity changes have the same effect and must be observed.



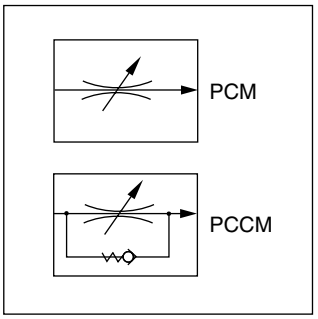

Technical data

Size	Max. press. [bar]	Flow control Q* [l/min]	Flow control Δp [bar]	Check valve Q_{max} [l/min]	Check valve Δp [bar]	Weight [kg]
400	210	1 - 10	7	20	3	0.82
600	210	2 - 25	7	30	3	1.05
800	210	6 - 60	11	75	8	1.68
1200	210	10 - 100	11	130	8	3.64
1600	210	19 - 190	11	250	10	6.59

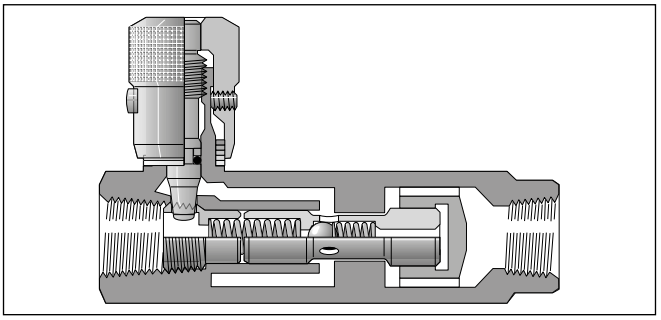

Ordering code

	PC		M		S			
Thread type	Press. comp. flow control valve	Design		Thread size	Steel body	Clamping screw	Seal	Design series (not required for ordering)

Code	Thread
omit	NPTF
9	**BSPP**

Code	Design
omit	**Without check valve**
C	With check valve

Code	Size
400	**1/4**
600	**3/8**
800	**1/2**
1200	**3/4**
1600	**1**

Code	Seal
omit	**NBR**
V	FPM

Code	Clamping screw
omit	**Hexagon socket**
F	With knurled knob
T [1)]	Tamper-proof

Bold letters =
Short-term availability

* Min. and max. flow rate
[1)] Only for size 400 to 1200

Δp/Q curves

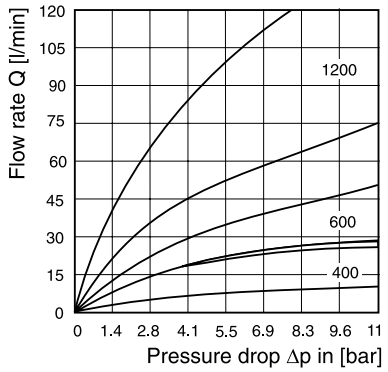

Sizes 400, 600 and 1200: Pressure drop Δp for flow through check valve in range Q_{max} / Q_{min} with each size

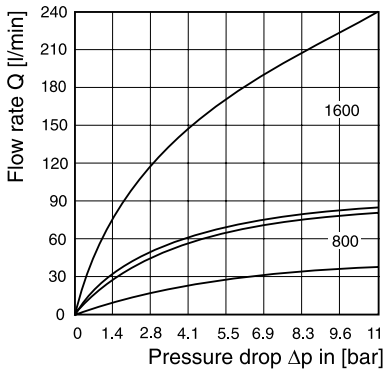

Sizes 800 and 1600: Pressure drop Δp for flow through check valve in range Q_{max} / Q_{min} with each size

Size 400 - 1600 p/Q control characteristic

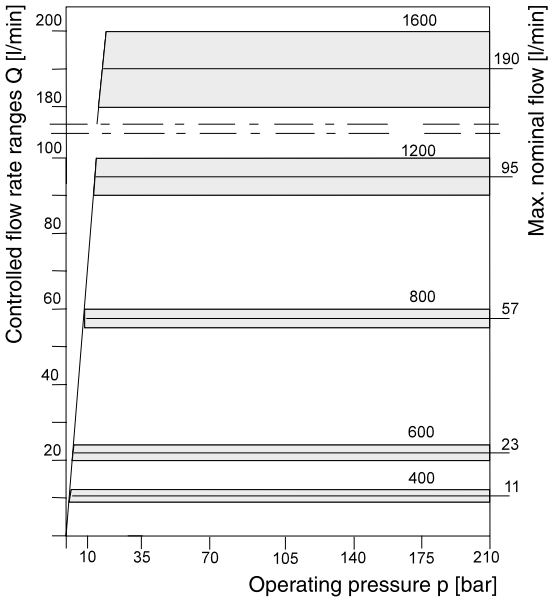

All characteristic curves measured with HLP46 at 50 °C.

Dimensions

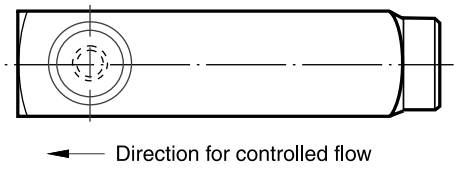

Direction for controlled flow

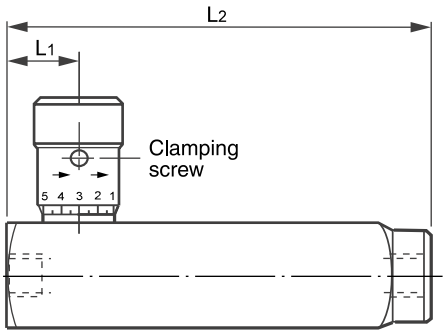

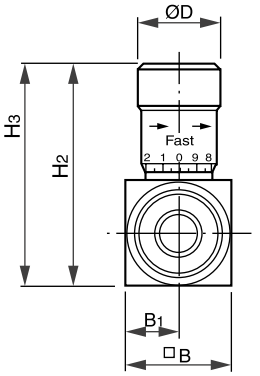

H2 = closed
H3 = open

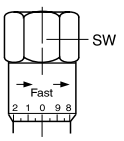

Hexagon adjusting knob, standard for size 1600

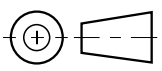

Size	R*	H3	H2	B	L1	B1	L2	ØD	SW
400	¼	69	64	35	16	18	92	21	-
600	⅜	80	74	38	18	19	106	25	-
800	½	103	95	44	22	22	125	30	-
1200	¾	128	116	57	28	29	149	35	-
1600	1	175	158	70	33	35	176	-	47.8

* Pipe thread G or NPTF

Manatrol check valves of series C for pipe mounting provide free flow in one direction and block flow in the counter direction. Depending on material specification, these valves are suited for use in hydraulic and pneumatic systems.

Specific poppets and poppet guides ensure reliable functional integrity even at high flow rates and/or pulsations.



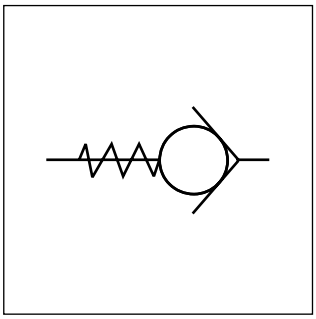

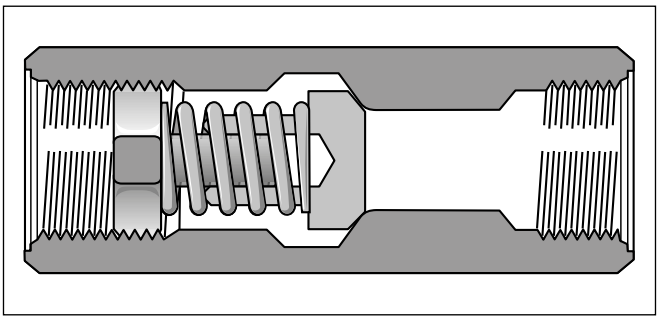

Technical data

Size			200	400	600	800	1200	1600
Max. operating pressure	steel	[bar]	350	350	350	350	350	210
	brass	[bar]	140	140	140	140	140	34
Pressure drop Δp		[bar]	10	10	10	10	1	1
Flow Q		[l/min]	40	65	110	155	112	160

Ordering code

		C			
Thread type		Pipe mounting	Port size	Body	Opening pressure

Code	Thread
omit	NPTF
9	**BSPP**

Code	Size
200	1/8
400	**1/4**
600	**3/8**
800	**1/2**
1200	**3/4**
1600	**1**

Code	Pressure [bar]
omit	**0.35**
65	4.5

Code	Body
S	**Steel**
B	Brass

Bold letters =
Short-term availability

10

Δp/Q performance curves

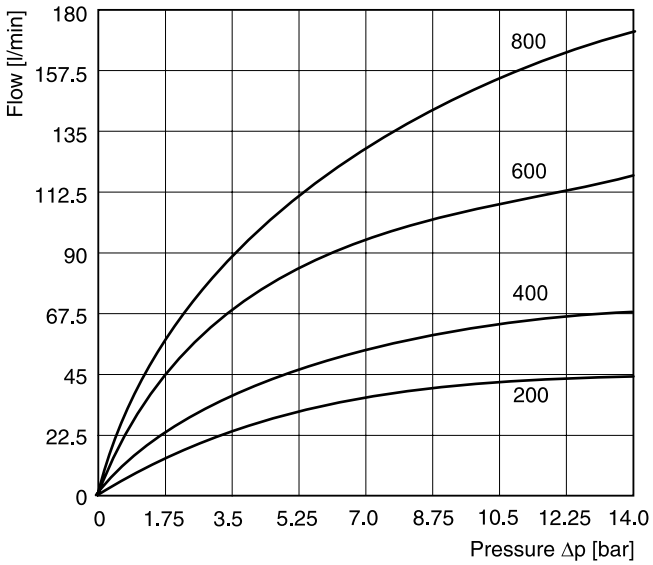

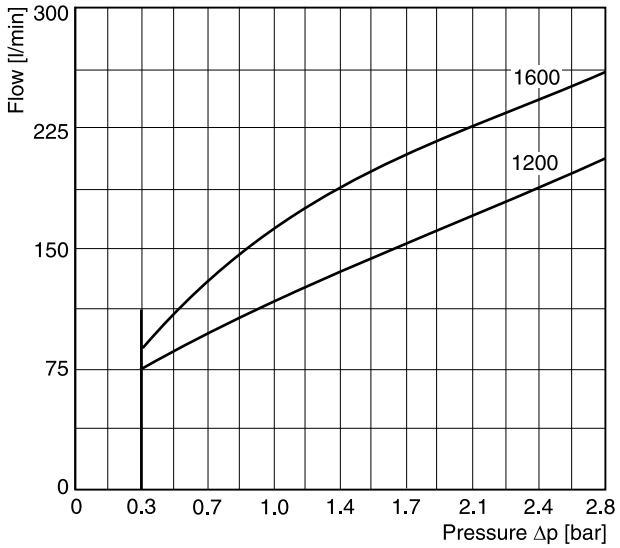

All characteristic curves measured with HLP46 at 50 °C.

Dimensions

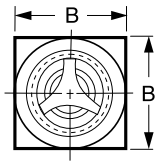

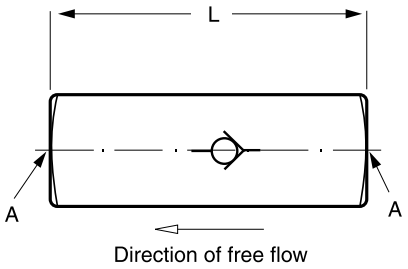

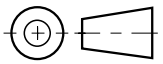

Size	Threaded connection R*		Dimensions [mm]		Weight [kg]
	G thread	NPTF thread	B	L	
C 200	R ⅛"	⅛-27 NPTF	16	51	0.05
C 400	R ¼"	¼-18 NPTF	21	66	0.2
C 600	R ⅜"	⅜-18 NPTF	25	70	0.2
C 800	R ½"	½-14 NPTF	32	87	0.6
C 1200	R ¾"	¾-14 NPTF	38	99	0.9
C 1600	R 1"	1-11-½ NPTF	45	127	1.5

* For alternative thread design, see ordering code.

Pilot operated check valves series CP allow free flow in one direction (A to B).

The counter direction (B to A) is blocked. By applying pilot pressure, the poppet can be lifted from its seat against the pressure in port B. Thus flow in the counter direction is also possible. There are 1 and 2 stage poppets available with pilot ratios of 1 : 5 and 1 : 40, to suit different operating conditions.



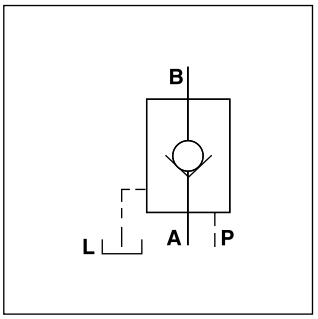

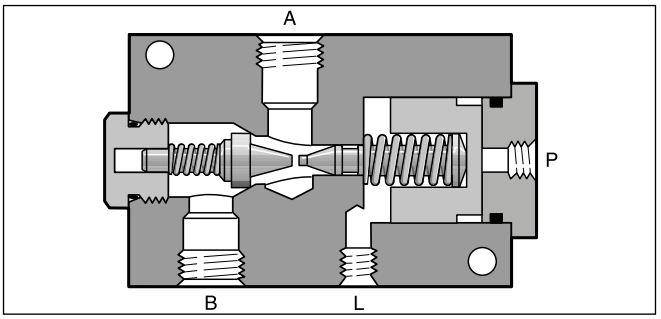

Technical data

Size		600	1200
Max. operating pressure	[bar]	210	210
Max. pilot pressure	[bar]	210	70
Flow Q_{max} at Δp 2.7 bar	[l/min]	30	95
Nominal size		3/8	3/4
Weight	[kg]	4	7

Pilot ratios

Poppet 1 stage

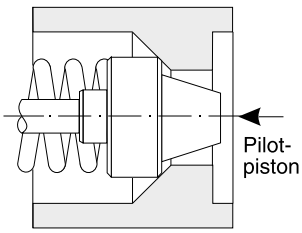

Surface ratio 5 : 1 (pilot spool-poppet surface) for quick response time without decompression.

Poppet 2 stage

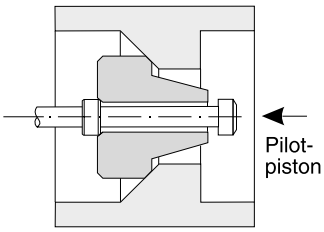

Surface ratio 40 : 1 (pilot spool decompression pin surface) for low shock or oscillation performance from decompression.

Ordering code

	CP		S		M	
Thread type	Check valve, pilot operated	Port size	Steel body	Pilot ratio	Steel poppet	Seal

Code	Thread
omit	NPTF
9	**BSPP**

Code	Size
600	**3/8**
1200	**3/4**

Code	Pilot ratio	Stage
5	**5 : 1**	**1**
40	40 : 1	2

Code	Seal
omit	**NBR**
V	FPM

Bold letters =
Short-term availability

10

Δp/Q performance curves

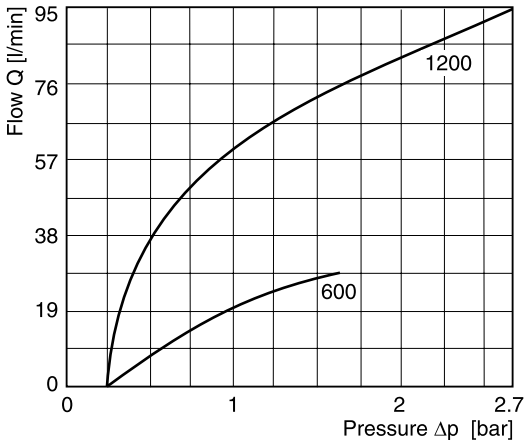

All characteristic curves measured with HLP46 at 50 °C.

Dimensions

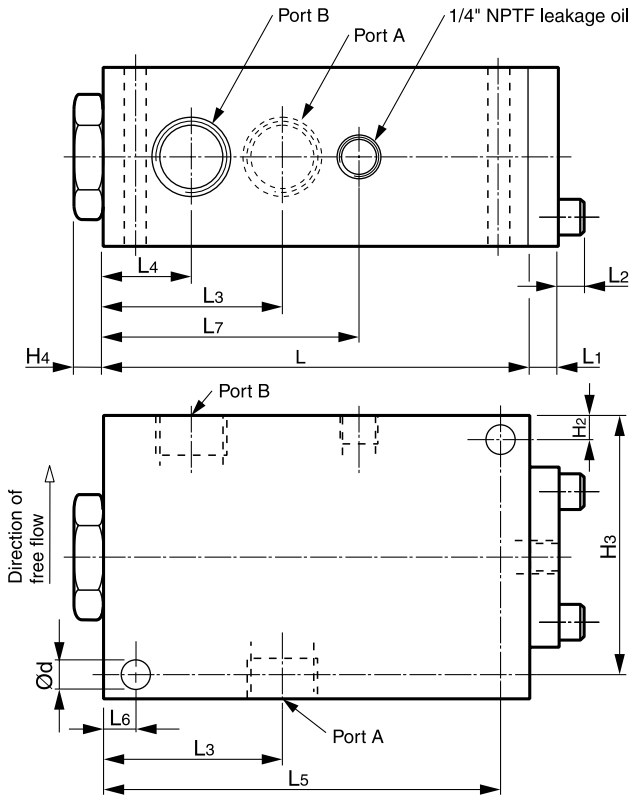

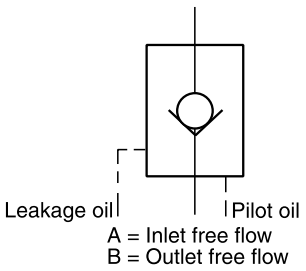

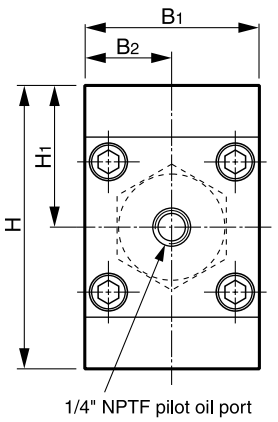

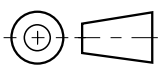

Size	A, B	L_3	B_1	B_2	H_1	H	L_4	L_7	H_4	L	L_1	H_2	H_3	L_6	L_5	Ød	W
9CP600S	G3/8	53.3	50.8	25.4	38.1	76.2	25.4	76.2	10.4	120.7	10.7	9.4	66.5	9.4	111	9.1	-
9CP1200S	G3/4	63.5	63.5	31.8	50.8	101.6	31.8	91.2	10.7	152.4	11.43	11.2	90.4	11.2	141.2	10.7	7.9

Pilot operated check valves series RH allow free flow in one direction (B to A). The counter flow is blocked (A to B). By applying pilot pressure the ball can be lifted from its seat and allow flow from A to B.

Most common use:

- Keeping cylinders leak-free in position, when spool type directional control valves are used
- Return line discharge, when return flow exceeds functional limits of directional control valve at differential cylinders
- As hydraulically activated drain or circulation valve

The valves are available without and with hydraulic pre-discharging.



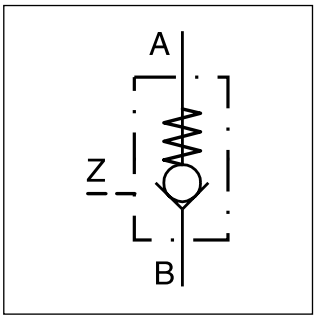

Without pre-discharging

These valves have a ball as valve element, which quickly enables the full flow cross-section proportionally during pilot operation. A metering position in the pilot port dampens the control movement of the pilot spool so that pressure shocks (unloading shocks) are mostly suppressed.

With pre-discharging

For valves with pre-discharging a spherical polished valve spool (seat valve function) is built-in instead of a ball. The additional check valve achieves a pre-opening which provides shock-free unloading of the fluid, especially at high working pressure and large volumes.

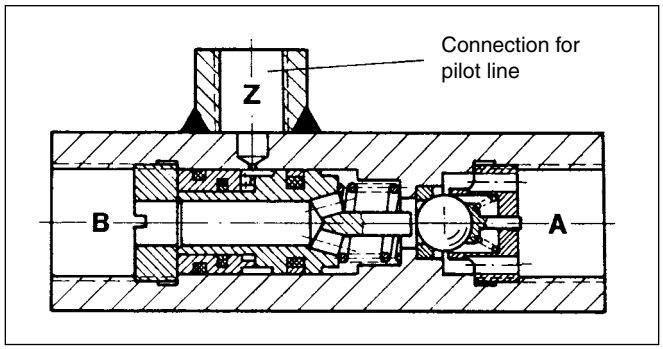

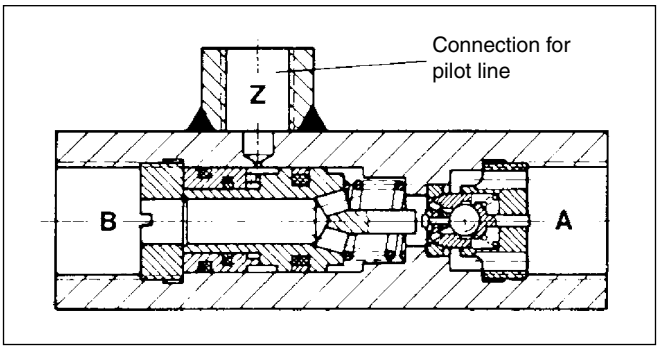

10

Ordering code

RH		
Check valve, hydr. pilot operated	Flow	Pre-discharging

Code	Flow [l/min]
1	15
2	**35**
3	**55**
4	100

Code	Pre-discharging
V [1]	**with**
omit	**without**

Bold letters =
Short-term availability

[1] Only for sizes 3 and 4

Technical data

General						
Code		RH	**1**	**2**	**3 / 3V**	**4 / 4V**
Pipe connections	DIN ISO 228/1 A, B DIN ISO 228/1 Z		G ¼ G ¼	G ⅜ G ¼	G ½ G ¼	G ¾ G ¼
Mounting			Freely suspended in the pipeline			
Mounting position			unrestricted			
Ambient temperature		[°C]	-20 ... +60			
$MTTF_D$ value		[years]	150			
Weight		[kg]	0.4	0.4	0.6	1.3
Hydraulic						
Max. operating pressure		[bar]	700	700	500	500
Flow approx.		[l/min]	15	35	55	100
Pilot flow volume		[cm³]	0.15	0.22	0.4	1
Fluid			Hydraulic oil according to DIN 51524			
Fluid temperature		[°C]	-20...+70			
Viscosity	permitted recommended	[cSt]/[mm²/s] [cSt]/[mm²/s]	20...400 30...80			

Pilot pressure p_{St} for pilot operation of the main valve
(p_B = 0 bar)

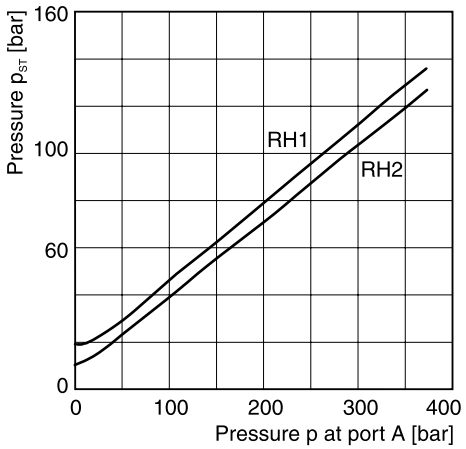

Pilot pressure p_{St} for pilot operation of pre-discharging

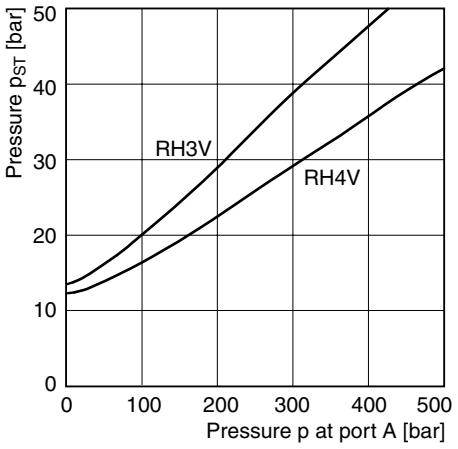

for keeping open		
p_{St}		$p_B + \Delta p + k$
p_B	[bar]	pressure on side B
Δp	[bar]	flow resistance A to B as per $\Delta p/Q$ performance curve
k		10 at RH 1 and RH 2
		7 at RH 3 V
		8 at RH 4 V

10

Performance Δp/Q curves (valid for flow polarity B to A and pilot operated direction A to B)

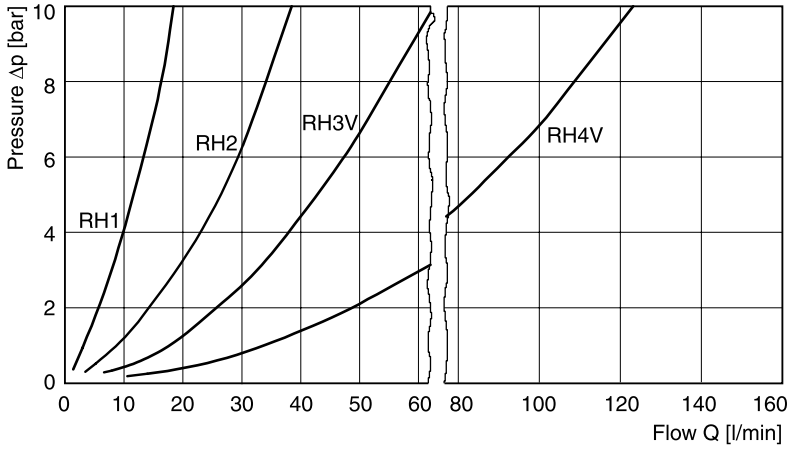

Opening pressure B to A 0.2...0.3 bar

Oil viscosity during the measurement, 60 mm²/s

For viscosities over approx. 500 mm²/s, a strong Δp-increase is to be expected for smaller types (RH1...RH3).

Dimensions

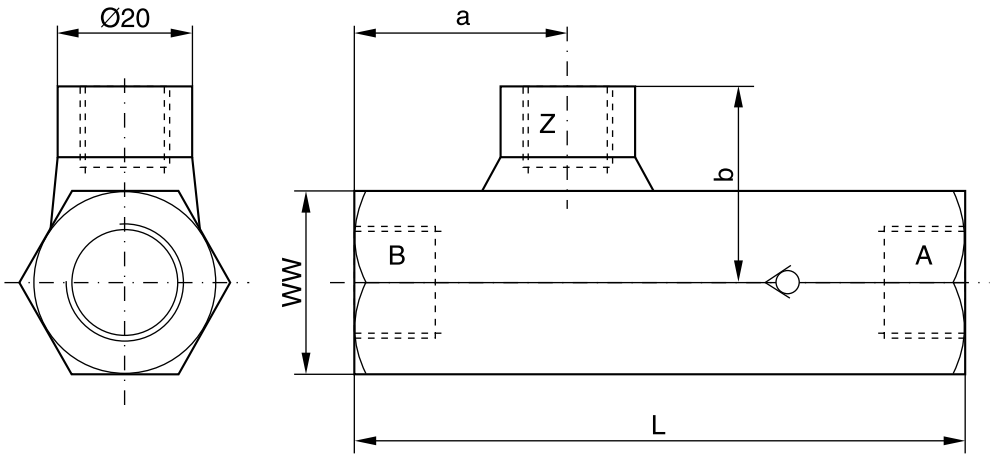

Type	Port [1]		L	a	b	SW
	A, B	Z				
RH 1	G ¼	G ¼	84	31.5	27	24
RH 2	G ⅜	G ¼	90	32	28.5	27
RH 3 V	G ½	G ¼	100	36.5	31	32
RH 4 V	G ¾	G ¼	126	45	35.5	41

[1] As per DIN 228/1, suitable for pipe connections with thread studs form B as per DIN 3852 page 2.

Description	Threaded cable joint	Body colour coding	Order no.
Plug EN 175301-803 [1], design type AF, protection class IP65 Voltages up to 250 V	PG 9	black, B	**5001710**
		grey, A	**5001711**
	PG11	black, B	**5001716**
		grey, A	**5001717**

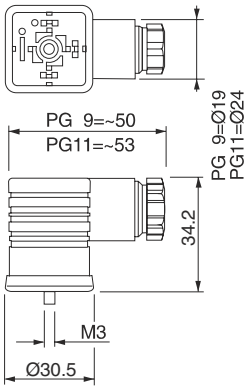

[1] EN 175301-803 (new) corresponding with DIN 43650 (old).

Other plugs on request

10

Series	Description	For use with															Page
		D*FB, D*1FB	D*FB, D*1FB OBE	D*FC, D*1FC	D*FP, D*1FP	R4V, R6V, R4R	R4V, R6V OBE	RE06M*W	RE06M*T	VMY, VBY	DUR*L	PRPM	TDA, TEA	TDP, TPQ	RE*E*W	RE*E*T	R5V, R5R	
	Amplifiers for proportional valves																	
PWD00	For valves w/o position transducer	•																11-2
PWDXX	For valves with position transducer or valves in closed loop systems	•				•		•		•	•	•	•		•		•	11-6
PCD00	For up to 2 single solenoid valves w/o transducer					•		•		•	•	•	•		•		•	11-10
	Electronics for command signal processing																	
PZD00	Min/max adjustment, 6 command channels, 6+1 ramps		•	•	•		•		•					•		•		11-14
	Axis controller																	
PID00	For position, pressure and speed control in closed loop systems		•	•	•		•		•					•		•		11-18
Compax3F	Multifunctional axis controller for basic and high end applications		•		•									•				11-22
Compax3F Accessories	Terminal strips, cables																	11-36
	Accessories																	
EX-M05	Test unit for items with integrated electronics																	11-38

11

Parker electronic modules PWD00A-400 for rail mounting are compact, easy to install and provide time-saving wiring by disconnectable terminals. The digital design of the circuit results in good accuracy and optimal adaption for proportional directional control valves by a comfortable interface program.



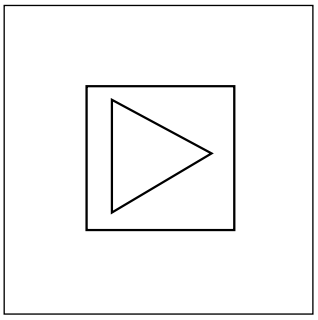

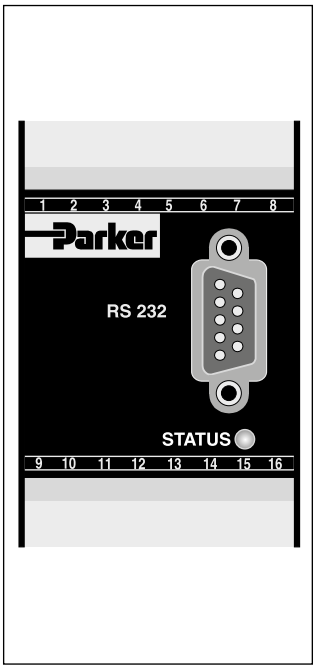

CE

Features

The described electronic unit combines all necessary functions for the optimal operation of proportional directional control valves without position sensor (series D*FB, D*1FB). The most important features are:

- Digital circuit design
- Four parameterizable command channels
- Constant current control
- Differential input stage
- Status output
- Four-quadrant ramp function
- Enable input for solenoid driver
- Status indicator
- Parametering by serial interface RS232C
- Connection by disconnectable terminals
- Compatible to the relevant European EMC standards
- Comfortable PC user software, free of charge: www.parker.com/euro_hcd - see "Support", or directly at www.parker.com/propxd.

Ordering code

PWD	00	A	–	400	–	
Electronic module directional control valves	**Universal**			**Amplifier min/max adjustment accel/decel ramps command input 4 command channels**		**Design series** (not required for ordering)

11

Technical data

General		
Model		Module package for snap-on mounting on EN 50022 rail
Package material		Polycarbonate
Inflammability class		V0 acc. UL 94
Installation position		unrestricted
Ambient temperature range	[°C]	-20...+60
Protection class		IP 20 acc. EN 60529
$MTTF_D$ value	[years]	150
Weight	[g]	160
Electrical		
Duty ratio	[%]	100
Supply voltage	[VDC]	18...30, ripple < 5 % eff., surge free [1]
Current consumption max.	[A]	2.2
Pre-fusing	[A]	2.5, medium lag
Command signal	[V]	+10...0...-10, ripple < 0.01 % eff., surge free, Ri = 150 kOhm
Input signal resolution	[%]	0.025
Differential input voltage max.	[V]	30 for terminals 5 und 6 against PE (terminal 8)
Enable signal	[V]	0...4.0: Off / 9.0...30: On / Ri = 30 kOhm
Command channel signal	[V]	0...4.0: Off / 9.0...30: On / Ri = 30 kOhm
Status signal	[V]	0...0.5: Off / Us: On / rated max. 15 mA
Adjustment ranges		
Min	[%]	0...50
Max	[%]	50...100
Ramp	[s]	0...32.5
Zero offset	[%]	+100...-100
Current	[A]	0.8 / 1.3 / 1.8 / 2.7 / 3.5
Interface		RS 232C, DSub 9p. male for null modem cable
EMC		EN 50081-2, EN 50082-2
Connection		Screw terminals 0.2...2.5 mm², disconnectable
Cable specification	[mm²]	1.5 overall braid shield for supply voltage and solenoids (AWG16)
	[mm²]	0.5 overall braid shield for sensor and signal (AWG20)
Cable length	[m]	50

Block diagram

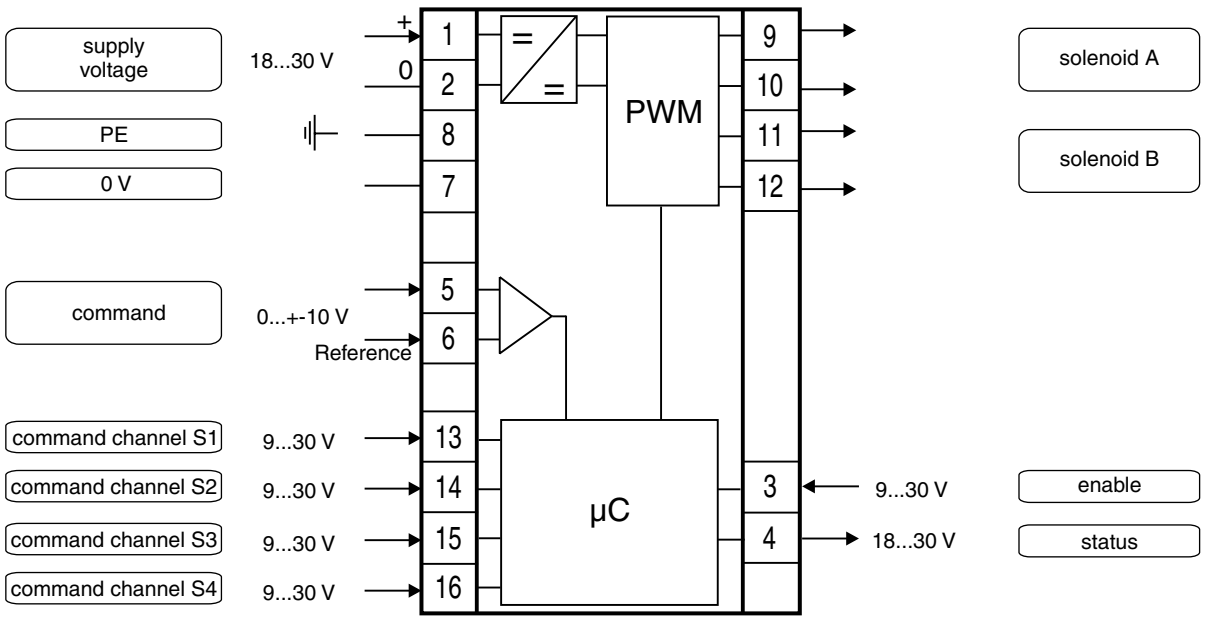

[1] If solenoids with a nominal voltage of 24 V are connected, the supply voltage has to be raised to 29 V.

Signal flow diagram

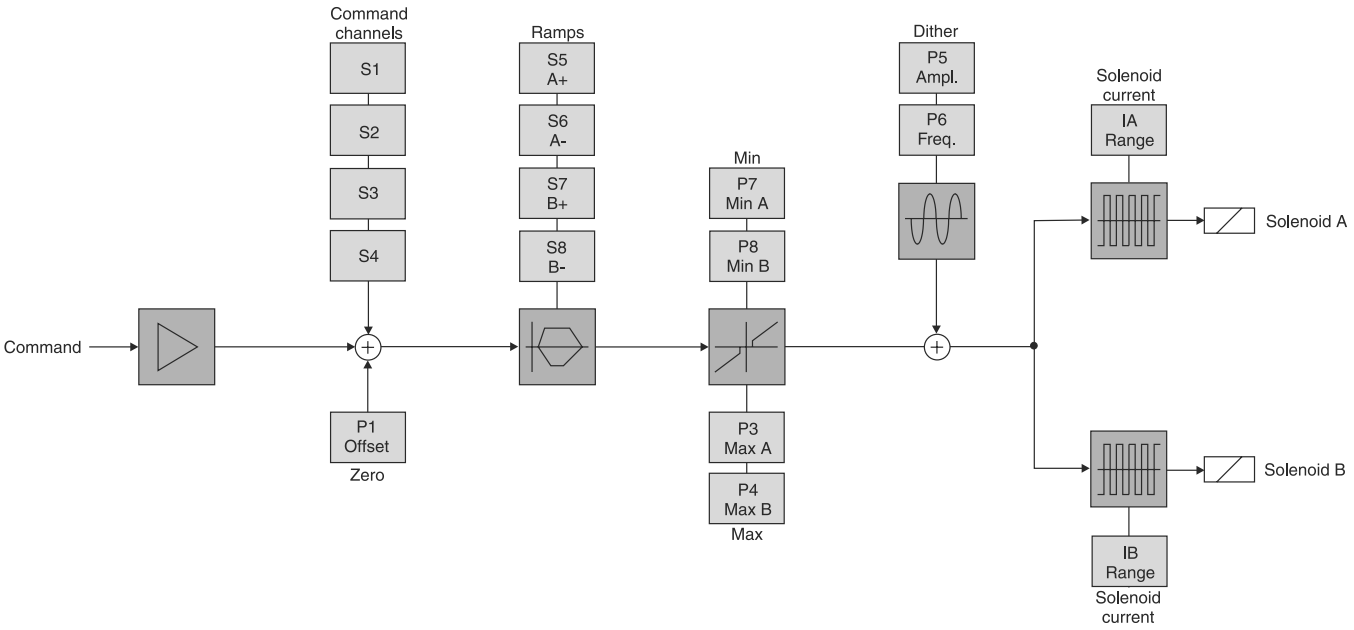

Dimensions

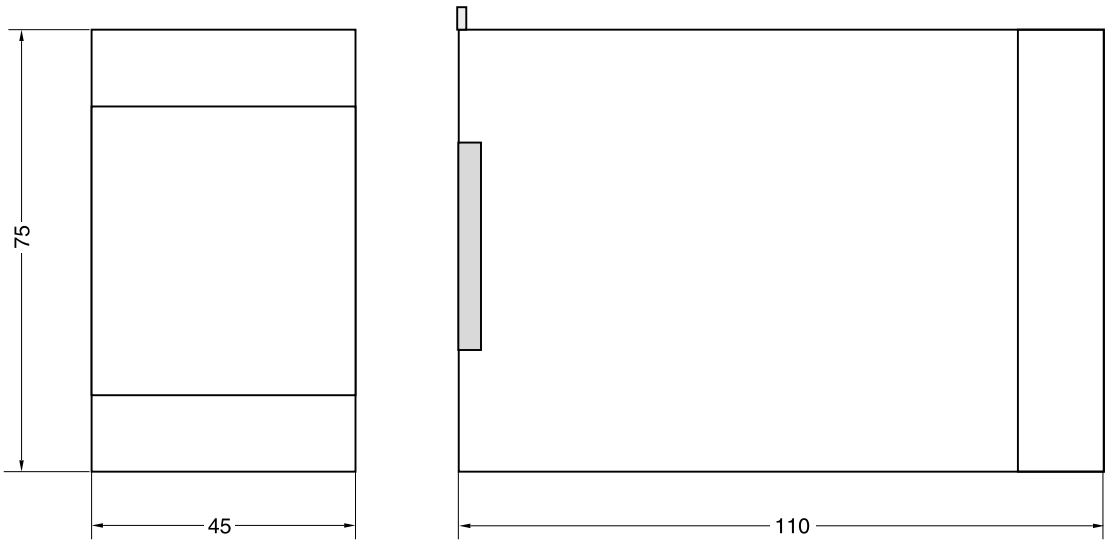

11

ProPxD interface program

The ProPxD software permits comfortable parameter setting for the module electronics. Via the clearly arranged entry mask the parameters can be monitored and modified. Storage of complete parameter sets is possible as well as printout or record as a text file for further documentation. Stored parameter sets may be loaded anytime and transmitted to other valves. Inside the electronics a nonvolatile memory stores the data with the option for recalling or modification.

The PC software can be downloaded free of charge at www.parker.com/euro_hcd – see page “Support" or directly at www.parker.com/propxd.

Features

- Comfortable editing of all parameters
- Depiction and documentation of parameter sets
- Storage and loading of optimized parameter adjustments
- Executable with all actual Windows® operating systems from Windows® XP upwards
- Plain communication between PC and electronics via serial interface RS232C

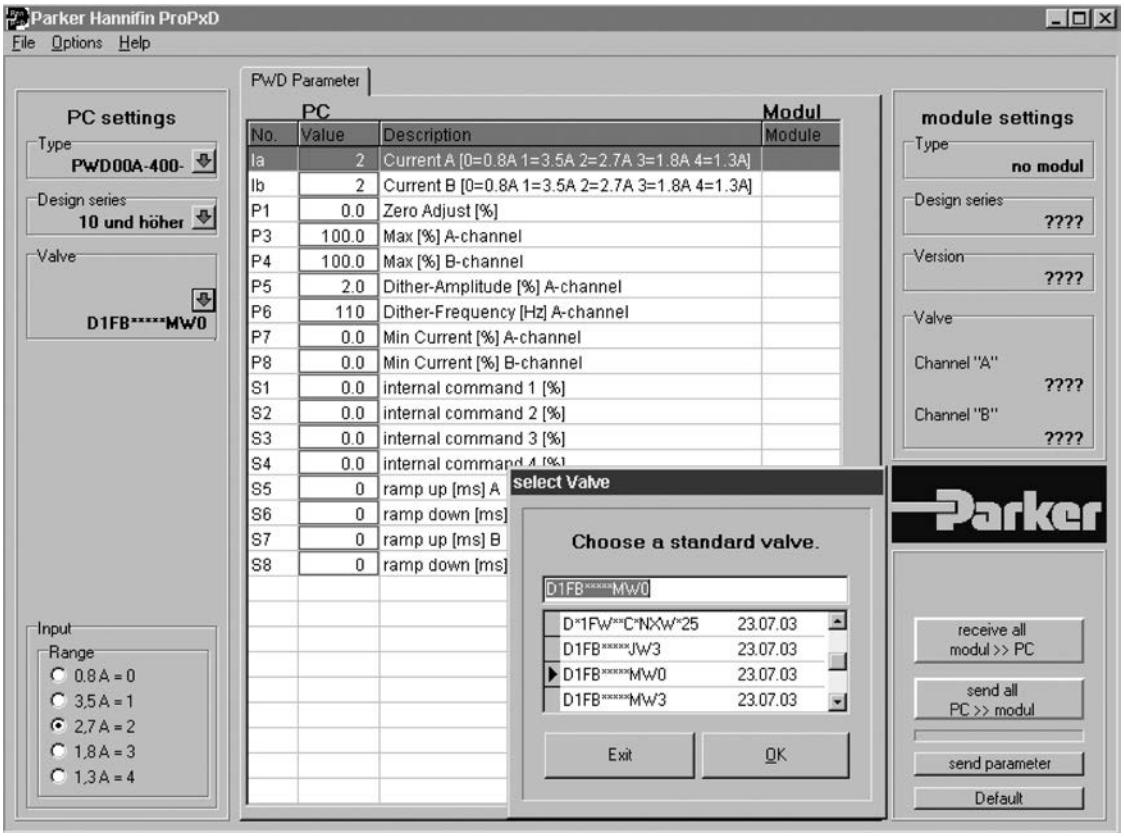

Parker electronic modules PWDXXA-40* for rail mounting are compact, easy to install and provide time-saving wiring by disconnectable terminals. The digital design of the circuit results in good accuracy and optimal adaption for proportional directional control valves with position sensor by a comfortable interface program.



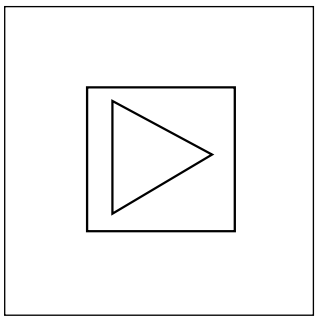

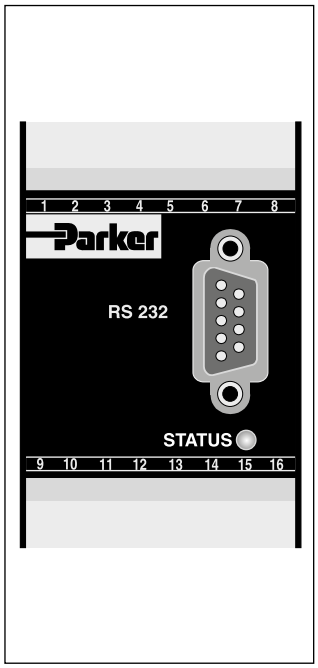

Features

The described electronic unit combines all necessary functions for the optimal operation of proportional directional control valves with position transducer or valves in closed loop systems. The most important features are:

- Digital circuit design
- Parameterizable position control of valve spool
- Constant current control
- Differential input stage with different signal options
- Monitor output for spool stroke
- Four-quadrant ramp function
- Enable input for solenoid driver
- Status indicator
- Parametering by serial interface RS232C
- Connection by disconnectable terminals
- In combination with valves without spool feedback
  - Pressure control with proportional pressure valve and pressure sensor
  - Position control with proportional DC valve and actuator position transducer
- Optional technology function "linearization"
- Comfortable PC user software, free of charge: www.parker.com/euro_hcd - see "Support", or directly at www.parker.com/propxd.

Ordering code

PWD	XX	A	–	40	–		–	
Electronic module proportional valves	**Closed loop control universal**			**Amplifier min/max adjustment accel/decel ramps command input**		**Technology function**		**Design series** (not required for ordering)

Code	Function
0	Standard
1	Linearization option

Technical data

General		
Model		Module package for snap-on mounting on EN 50022 rail
Package material		Polycarbonate
Inflammability class		V0 acc. UL 94
Installation position		unrestricted
Ambient temperature range	[°C]	-20...+60
Protection class		IP 20 acc. EN 60529
$MTTF_D$ value	[years]	150
Weight	[g]	160
Electrical		
Duty ratio	[%]	100
Supply voltage	[VDC]	18...30, ripple < 5 % eff., surge free
Switch-on current typ.	[A]	22 for 0.2 ms
Current consumption max.	[A]	2.0
Pre-fusing	[A]	2.5, medium lag
Command signal options	[V]	+10...0...-10, ripple <0.01 % eff., surge free, Ri = 100 kOhm
	[mA]	+20...0...-20, ripple <0.01 % eff., surge free, Ri = 200 Ohm
	[mA]	4...12...20, ripple <0.01 % eff., surge free, Ri = 200 Ohm <3.6 mA = solenoid output off, >3.8 mA = solenoid output on (acc. NAMUR NE43)
Input signal resolution	[%]	0.025
Differential input voltage max.	[V]	30 for terminals 5 and 6 against PE (terminal 8)
	[V]	11 for terminals 5 and 6 against 0V (terminal 2)
Sensor supply	[V]	18...30 (Us), max. current <100 mA
Enable signal	[V]	0...2.5: Off / 5...30: On / Ri = 100 kOhm
Status signal	[V]	0...0.5: Off / Us: On / rated max. 15 mA
Monitor signal	[V]	+10...0...-10, rated max. 5 mA, signal resolution 0.4 %
Adjustment ranges Min	[%]	0...50
Max	[%]	50...100
Ramp	[s]	0...32.5
Zero offset	[%]	+100...-100
Current	[A]	1.3 / 2.7 / 3.5
Initial current	[%]	0...25
Interface		RS 232C, DSub 9p. male for null modem cable
EMC		EN 61000-6-2
Connection		Screw terminals 0.2...2.5 mm², disconnectable
Cable specification	[mm²]	1.5 overall braid shield for supply voltage and solenoids (AWG16)
	[mm²]	0.5 overall braid shield for sensor and signal (AWG20)
Cable length	[m]	50
Options		
Technology function	Code1	Software adjustable transfer function with 10 compensation points for linearization of valve behaviour

Block diagram

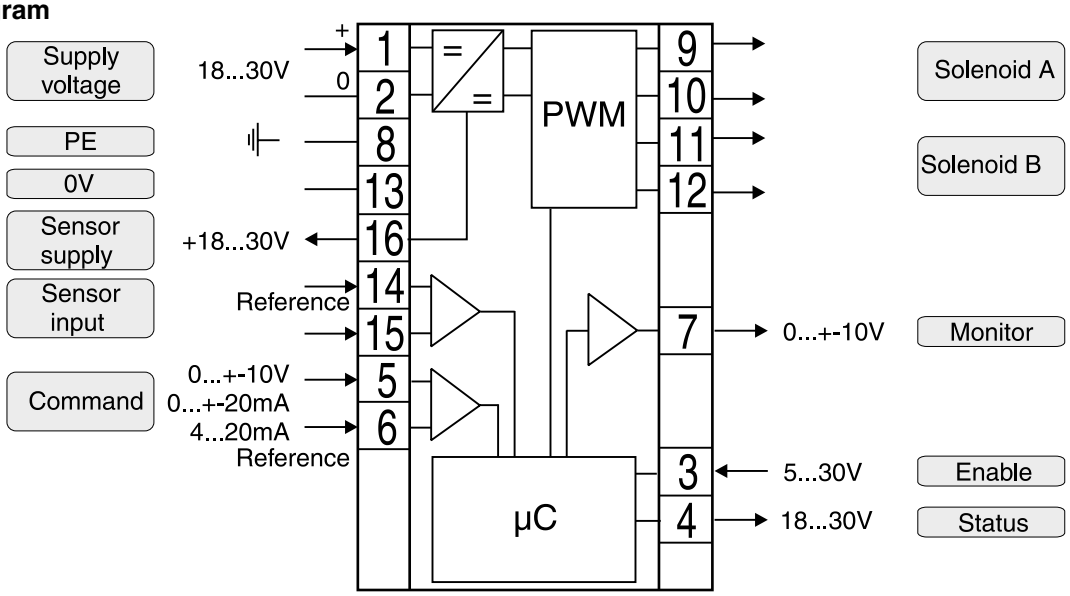

11

Signal flow diagram

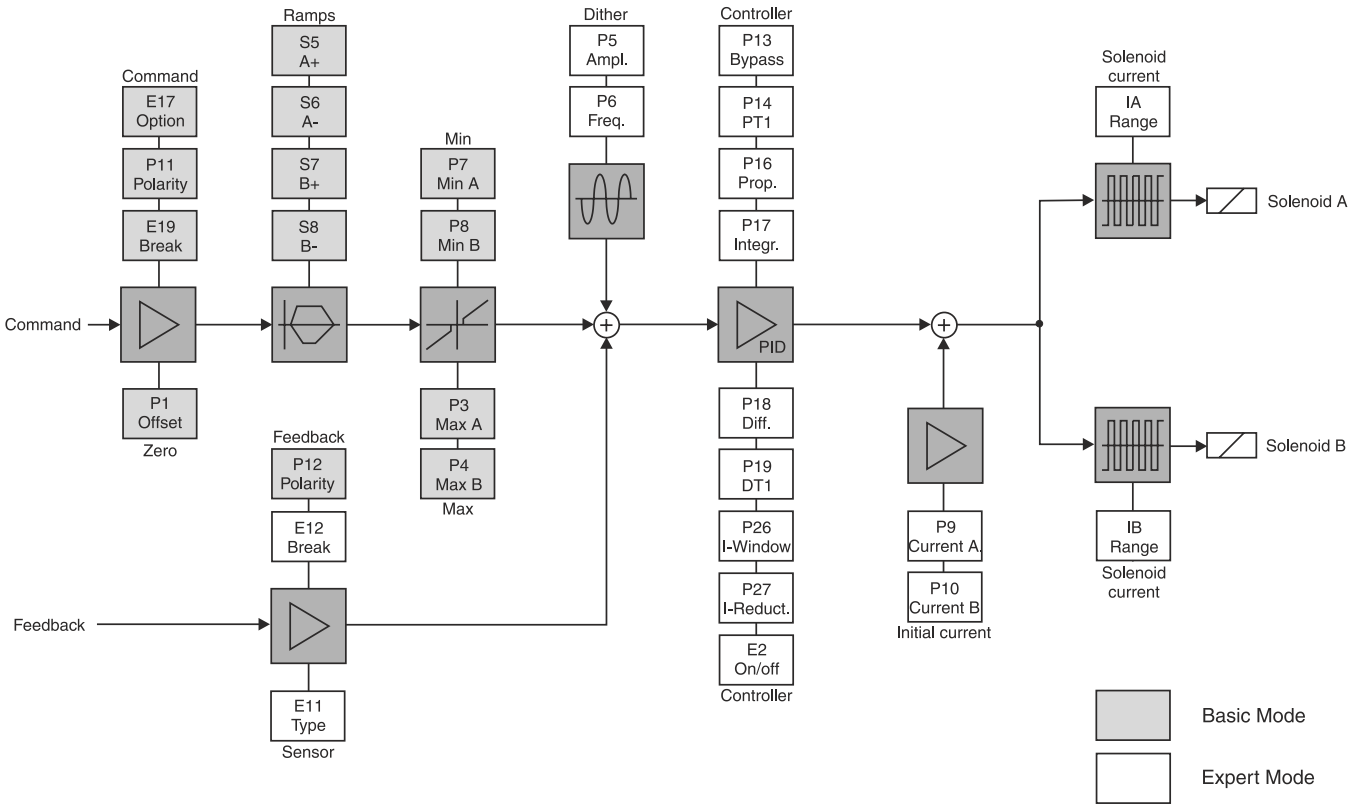

Dimensions

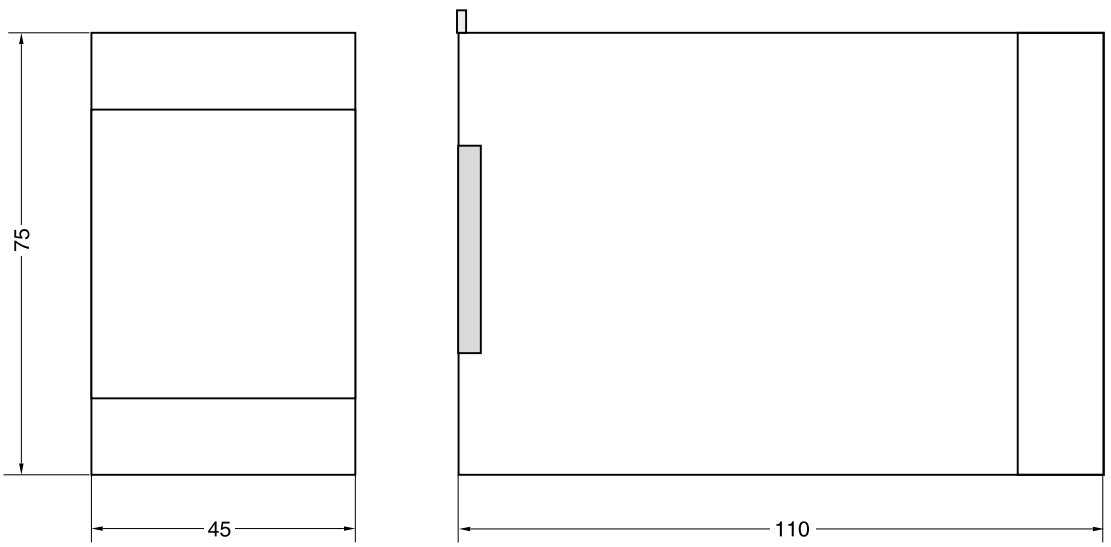

11

ProPxD interface program

The ProPxD software permits comfortable parameter setting for the module electronics. Via the clearly arranged entry mask the parameters can be monitored and modified. Storage of complete parameter sets is possible as well as printout or record as a text file for further documentation. Stored parameter sets may be loaded anytime and transmitted to other valves. Inside the electronics a nonvolatile memory stores the data with the option for recalling or modification.

The PC software can be downloaded free of charge at www.parker.com/euro_hcd – see page “Support" or directly at www.parker.com/propxd.

Features

- Comfortable editing of all parameters
- Depiction and documentation of parameter sets
- Storage and loading of optimized parameter adjustments
- Executable with all actual Windows® operating systems from Windows® XP upwards
- Plain communication between PC and electronics via serial interface RS232C

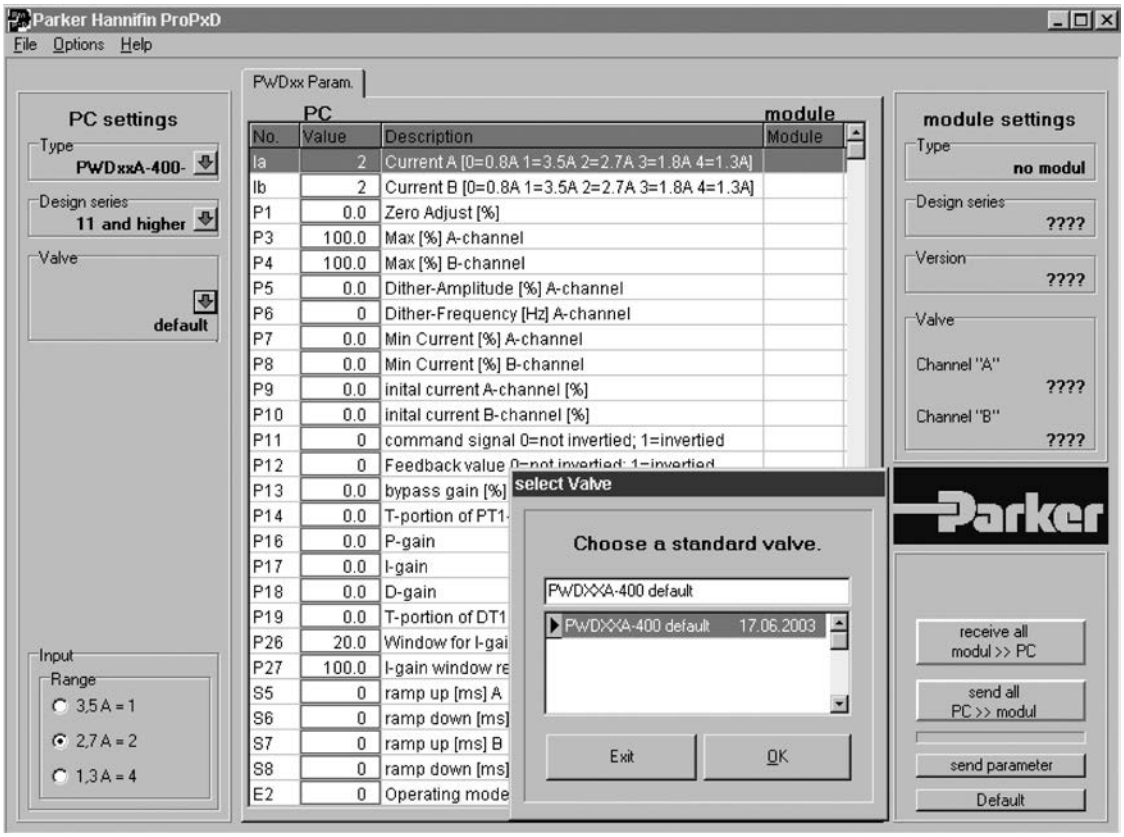

Parker electronic modules series PCD00A-400 for rail mounting are compact, easy to install and provide time-saving wiring by disconnectable terminals. The digital design of the circuit results in good accuracy and optimal adaption for proportional pressure/flow control valves by a comfortable interface program.



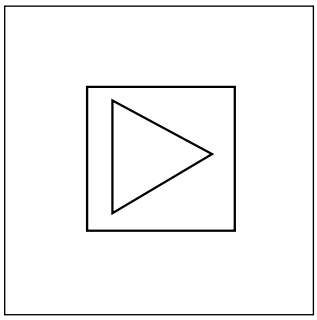

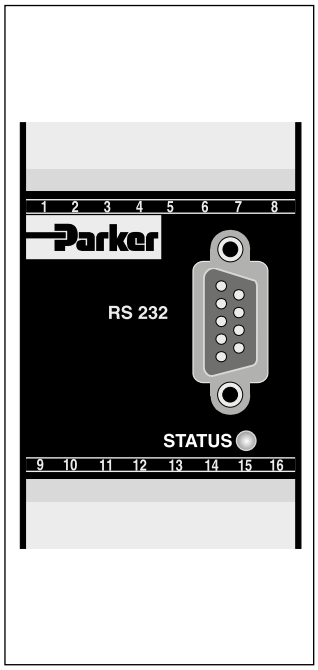

CE

Features

The described electronic unit combines all necessary functions for the optimal operation of two proportional pressure/flow control valves (series R*R, R*V, RE*E*W, RE06M*W, DUR, PRPM, VBY, VMY, TDA, TEA).

The most important features are:

- Digital circuit design
- Two independent operable amplifiers
- Four parameterizable command channels
- Constant current control
- Two input stages 0...10 V
- Status output
- Two up/down ramp functions
- Enable input for solenoid driver
- Status indicator
- Parametering by serial interface RS232C
- Connection by disconnectable terminals
- Compatible to the relevant European EMC standards
- Comfortable PC user software, free of charge: www.parker.com/euro_hcd - see "Support", or directly at www.parker.com/propxd.

Ordering code

PCD	00	A	–	400	–	
Electronic module pressure/flow valves	**Without position control universal**			**2 Amplifiers min/max adjustment accel/decel ramps command inputs 4 command channels**		**Design series** (not required for ordering)

11

Technical data

General		
Model		Module package for snap-on mounting on EN 50022 rail
Package material		Polycarbonate
Inflammability class		V0 acc. UL 94
Installation position		unrestricted
Ambient temperature range	[°C]	-20...+60
Protection class		IP 20 acc. EN 60529
$MTTF_D$ value	[years]	150
Weight	[g]	160
Electrical		
Duty ratio	[%]	100
Supply voltage	[VDC]	18...30, ripple < 5 % eff., surge free [1]
Current consumption max.	[A]	5.0
Pre-fusing	[A]	6.3, medium lag
Command signal	[V]	0...+10, ripple < 0.01 % eff., surge free, Ri = 150 kOhm
Input signal resolution	[%]	0.025
Differential input voltage max.	[V]	30 for terminals 5 und 6 against PE (terminal 8)
Enable signal	[V]	0...4.0: Off / 9.0...30: On / Ri = 30 kOhm
Command channel signal	[V]	0...4.0: Off / 9.0...30: On / Ri = 30 kOhm
Status signal	[V]	0...0.5: Off / Us: On / rated max. 15 mA
Adjustment ranges		
Min	[%]	0...50
Max	[%]	50...100
Ramp	[s]	0...32.5
Current	[A]	0.8 / 1.3 / 1.8 / 2.7 / 3.5
Interface		RS 232C, DSub 9p. male for null modem cable
EMC		EN 50081-2, EN 50082-2
Connection		Screw terminals 0.2...2.5 mm², disconnectable
Cable specification	[mm²] [mm²]	1.5 overall braid shield for supply voltage and solenoids (AWG16) 0.5 overall braid shield for sensor and signal (AWG20)
Cable length	[m]	50

Block diagram

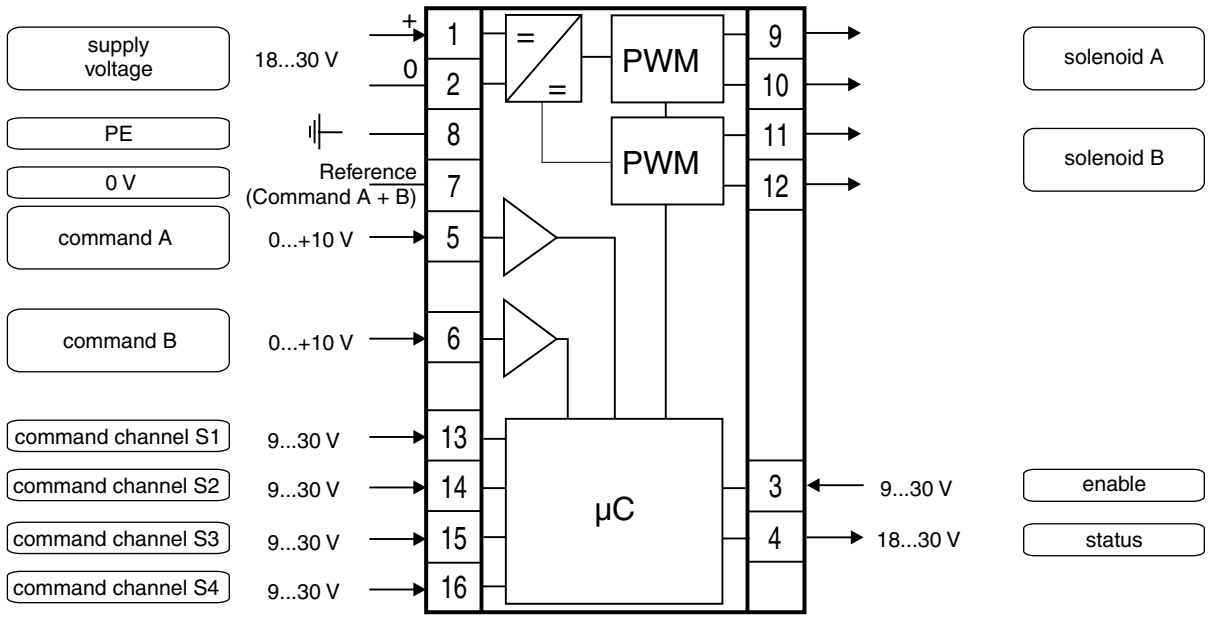

[1] If solenoids with a nominal voltage of 24 V are connected, the supply voltage has to be raised to 29 V.

Signal flow diagram

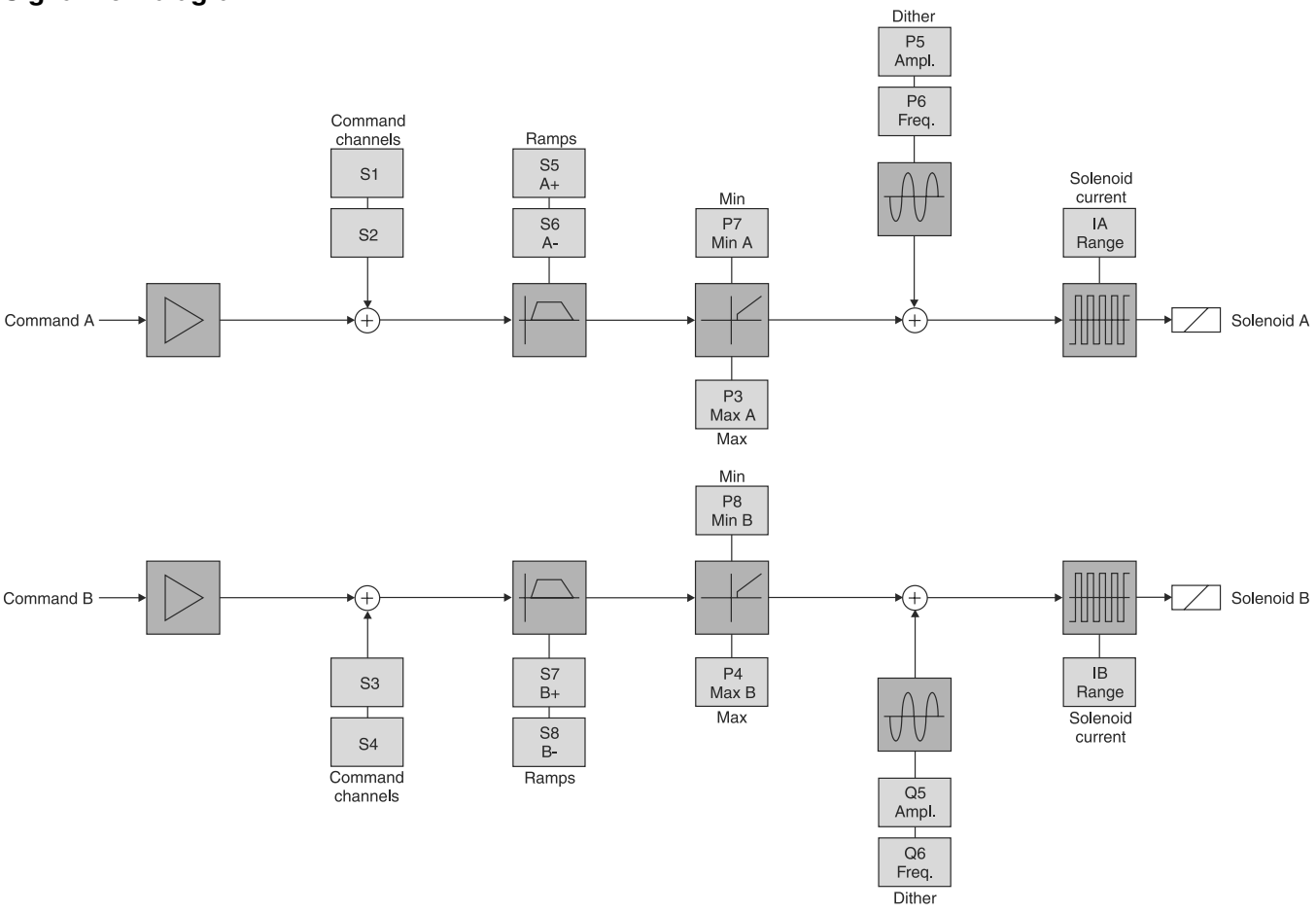

Dimensions

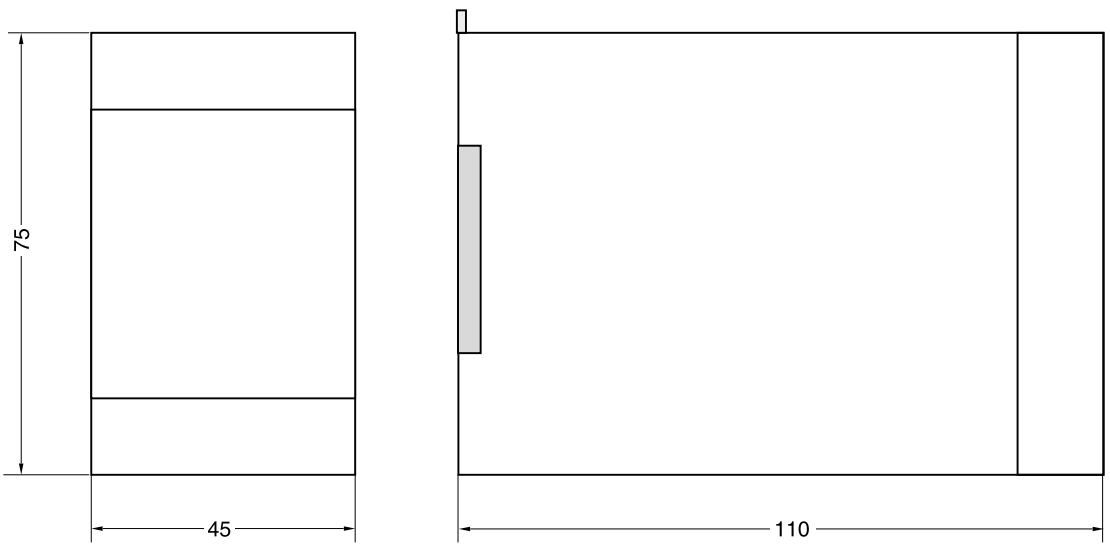

ProPxD interface program

The ProPxD software permits comfortable parameter setting for the module electronics. Via the clearly arranged entry mask the parameters can be monitored and modified. Storage of complete parameter sets is possible as well as printout or record as a text file for further documentation. Stored parameter sets may be loaded anytime and transmitted to other valves. Inside the electronics a nonvolatile memory stores the data with the option for recalling or modification.

The PC software can be downloaded free of charge at www.parker.com/euro_hcd – see page “Support" or directly at www.parker.com/propxd.

Features

- Comfortable editing of all parameters
- Depiction and documentation of parameter sets
- Storage and loading of optimized parameter adjustments
- Executable with all actual Windows® operating systems from Windows® XP upwards
- Plain communication between PC and electronics via serial interface RS232C

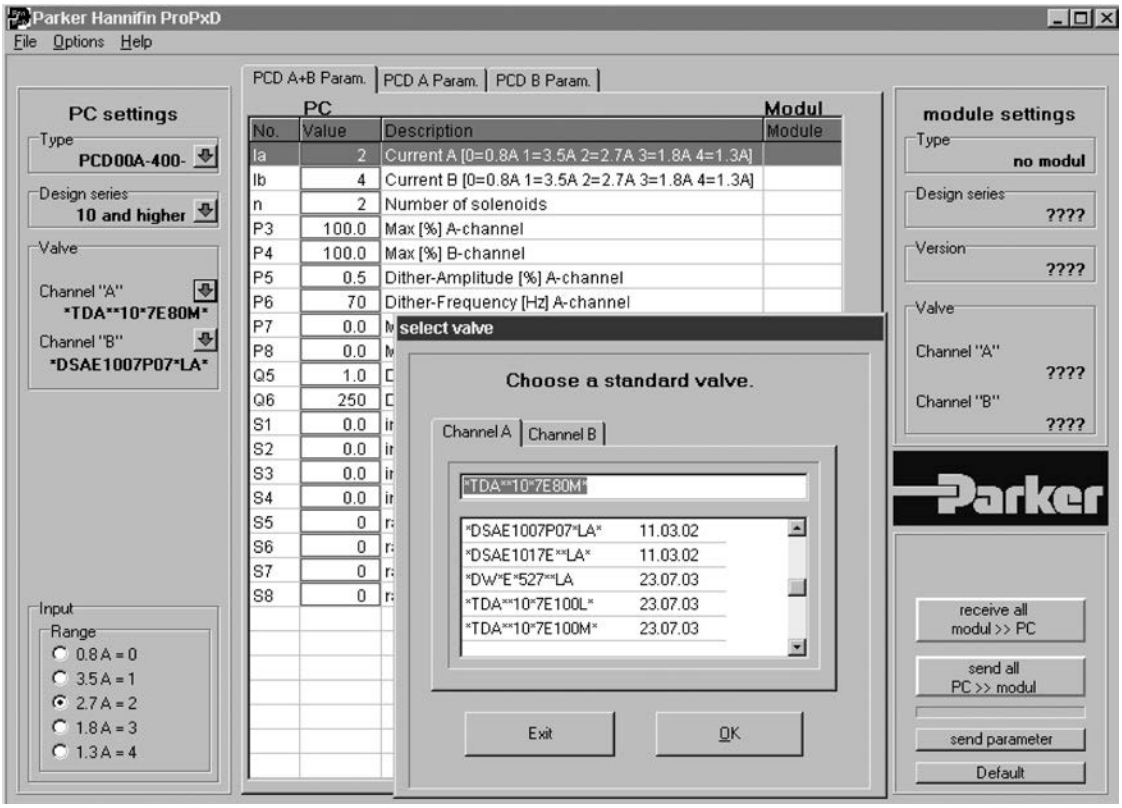

Parker electronic modules PZD00A-40* for rail mounting are compact, easy to install and provide time-saving wiring by disconnectable terminals. The digital design of the circuit results in good accuracy and optimal adaption for command signal processing by a comfortable interface program. The electronic unit may be connected in series to proportional valves with onboard electronic as well as to amplifier modules P*D.



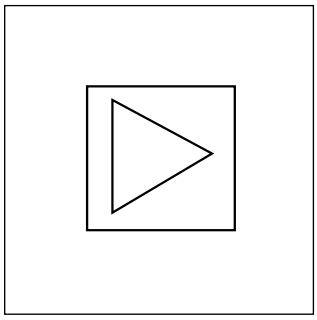

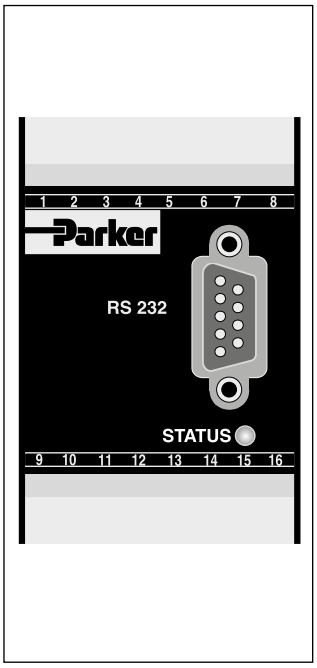

Features

- Digital circuit design
- Six parameterizable command channels with optional additive or priority dependent signal processing
- Output stage with different signal options
- Input stage with different signal options
- Status output
- Four-quadrant ramp function
- Reference output for potentiometer supply
- Status indicator
- Parametering by serial interface RS232C
- Connection by disconnectable terminals
- Compatible to the relevant European EMC standards
- Optional technology function "linearization"
- Comfortable PC user software, free of charge: www.parker.com/euro_hcd - see "Support", or directly at www.parker.com/propxd.

Ordering code

PZD	00	A	–	40	–	□	–	⌜⌝
Electronic module auxiliary function	**Universal**			**6 Command channels command input accel/decel ramps**		**Technology function**		**Design series** (not required for ordering)

Code	Function
0	Standard
1	Linearization option

Technical data

General		
Model		Module package for snap-on mounting on EN 50022 rail
Package material		Polycarbonate
Inflammability class		V0 acc. UL 94
Installation position		unrestricted
Amb. temperature range	[°C]	-20...+60
Protection class		IP 20 acc. EN 60529
$MTTF_D$ value	[years]	150
Weight	[g]	160
Electrical		
Duty ratio	[%]	100
Supply voltage	[VDC]	18...30, ripple < 5 % eff., surge free
Current consumption max.	[mA]	100
Pre-fusing	[mA]	500 medium lag
Command signal options	[V] [mA] [mA]	+10...0...-10, ripple <0.01 % eff., surge free, Ri = 100 kOhm +20...0...-20, ripple <0.01 % eff., surge free, Ri = <250 Ohm 4...12...20, ripple <0.01 % eff., surge free, Ri = <250 Ohm <3.6 mA = output signal 0 V / 0 mA / 12 mA acc. to output option >3.8 mA = output signal on (acc. NAMUR NE43)
Input signal resolution	[%]	0.025
Differential input max.	[V]	30 for terminals 5 und 6 against PE (terminal 8)
Command channel signal	[V]	0...1.0: Off / 5...30: On / Ri = 100 kOhm
Status signal	[V]	0...0.5: Off / Us: On / rated max. 15 mA
Output signal options	[V] [mA] [mA]	+10...0...-10, rated max. 15 mA +20...0...-20, Ro < 500 Ohm 4...12...20, Ro < 500 Ohm
Output signal resolution	[%]	0.025
Reference output	[V]	+10 / -10, 2 %, rated max. 15 mA
Adjustment ranges Min	[%]	0...50
Max	[%]	50...100
Cmd channels	[%]	+100...-100
Ramp	[s]	0...32.5
Zero offset	[%]	+100...-100
Interface		RS 232C, DSub 9p. male for null modem cable
EMC		EN 50081-2, EN 50082-2
Connection		Screw terminals 0.2...2.5 mm², disconnectable
Cable specification	[mm²]	0.5 overall braid shield (AWG20)
Cable length	[m]	50
Options		
Technology function	Code1	Software adjustable transfer function with 10 compensation points for linearization of valve behaviour

Block diagram

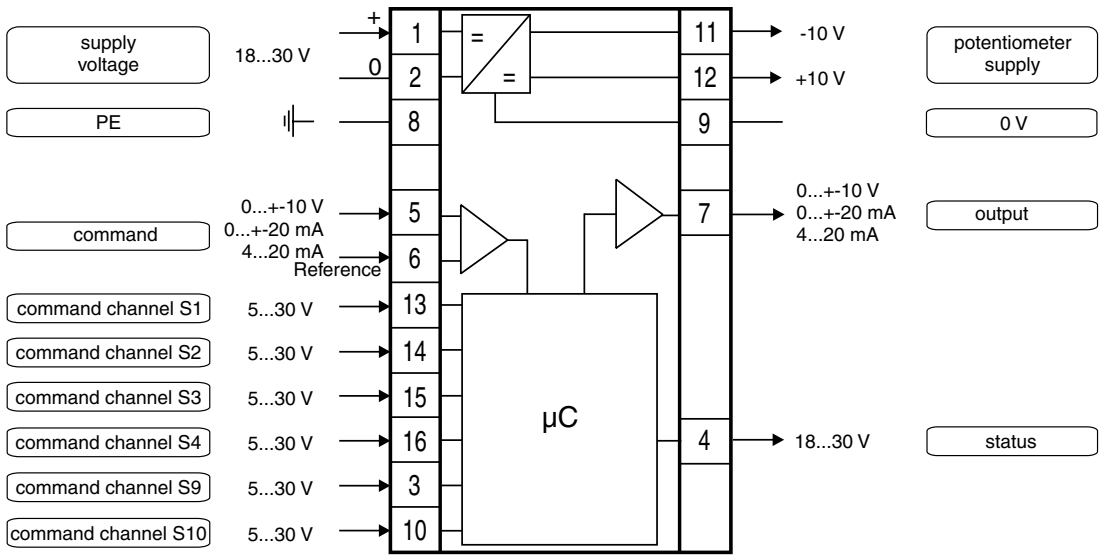

Signal flow diagram

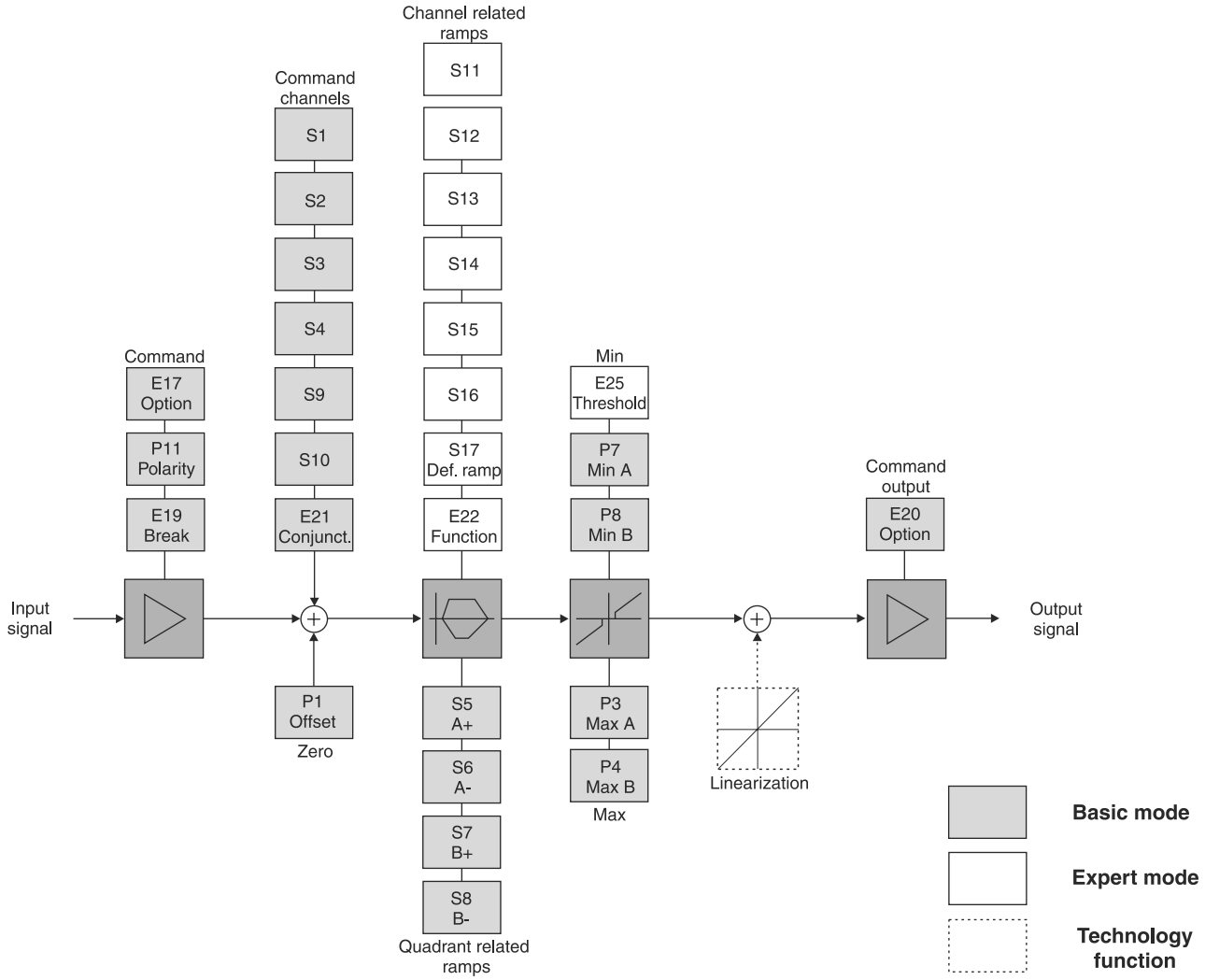

Dimensions

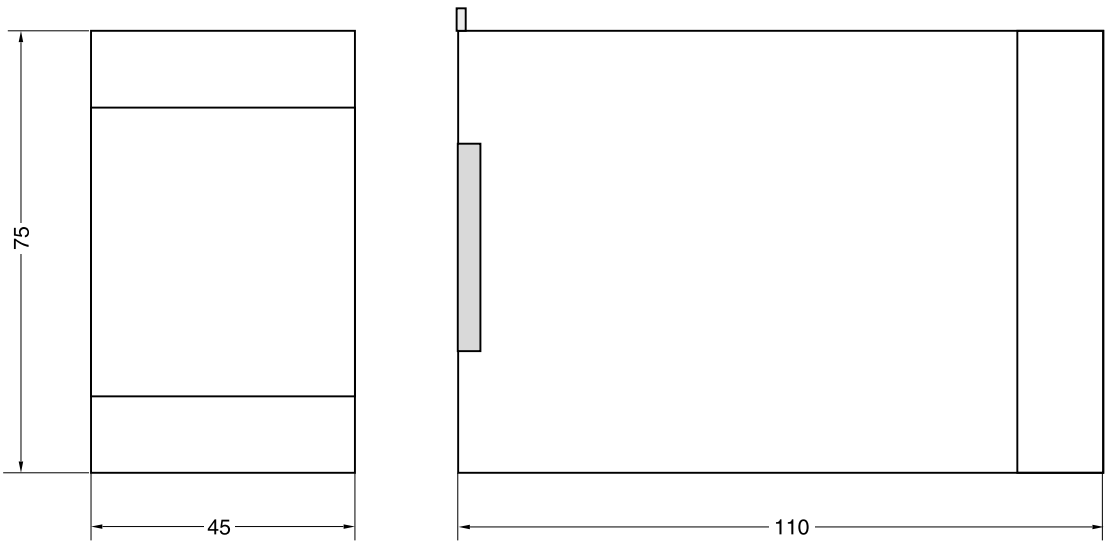

ProPxD interface program

The ProPxD software permits comfortable parameter setting for the module electronics. Via the clearly arranged entry mask the parameters can be monitored and modified. Storage of complete parameter sets is possible as well as printout or record as a text file for further documentation. Stored parameter sets may be loaded anytime and transmitted to other valves. Inside the electronics a nonvolatile memory stores the data with the option for recalling or modification.

The PC software can be downloaded free of charge at www.parker.com/euro_hcd – see page “Support" or directly at www.parker.com/propxd.

Features

- Comfortable editing of all parameters
- Depiction and documentation of parameter sets
- Storage and loading of optimized parameter adjustments
- Executable with all actual Windows® operating systems from Windows® XP upwards
- Plain communication between PC and electronics via serial interface RS232C

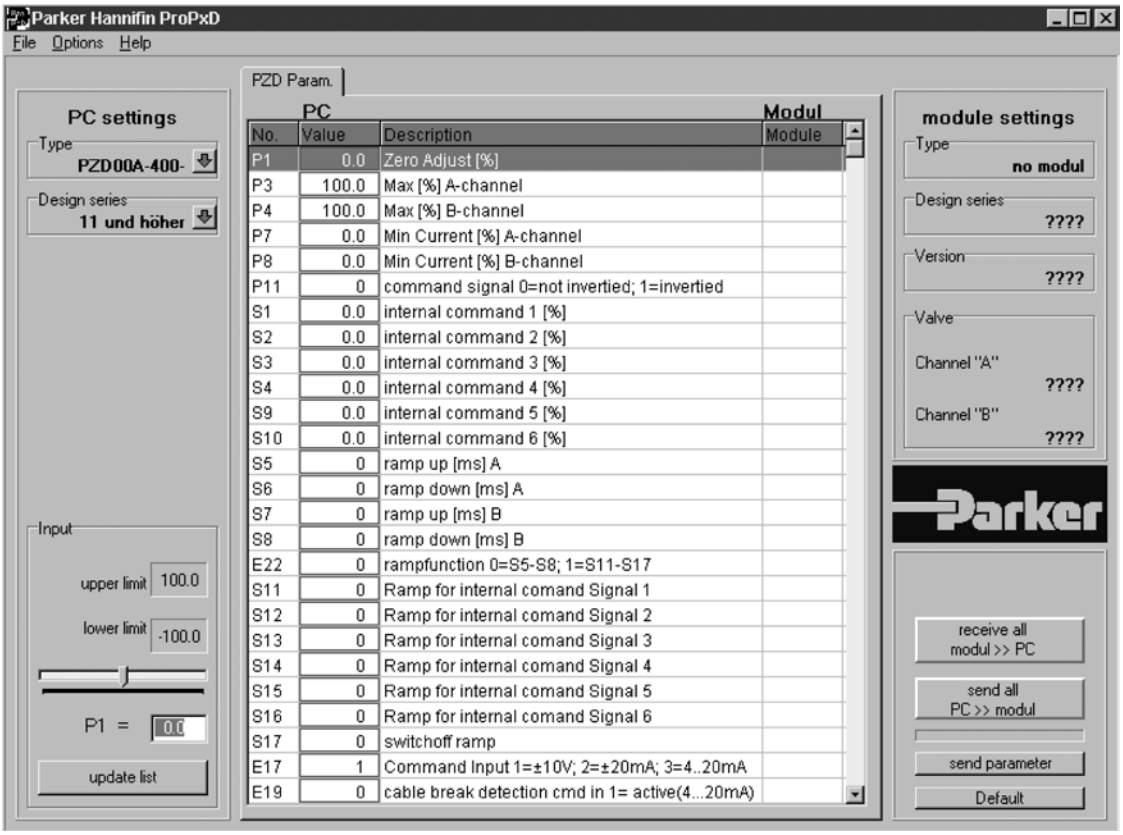

11

Parker electronic modules PID00A-40* for rail mounting are compact, easy to install and provide time-saving wiring by disconnectable terminals. The digital design of the circuit results in good accuracy and optimal adaption for closed loop controls by a comfortable interface program.



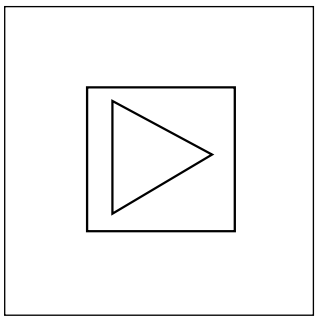

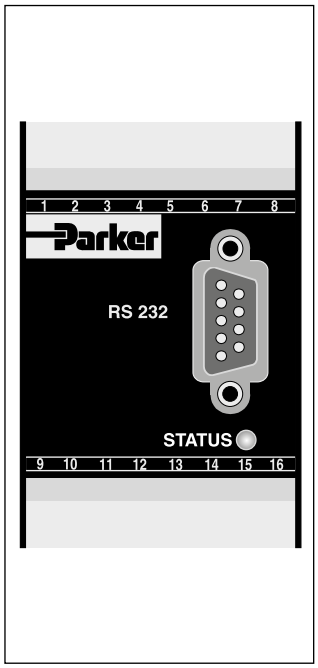

Features

The described electronic unit combines all necessary functions for the optimal operation of closed loop controls. The most important features are:

- Extended PID controls
- Speed control with position feedback
- Differential input stage with different signal options
- Output stage with different output options
- Four-quadrant ramp function
- Status indicator
- Digital circuit design
- Parametering by serial interface RS232C
- Connection by disconnectable terminals
- Compatible to the relevant European EMC standards
- Optional technology function "linearization"
- Comfortable PC user software, free of charge: www.parker.com/euro_hcd - see "Support", or directly at www.parker.com/propxd.

Ordering code

PID	00	A	–	40	–	□	–	⌜ ⌝
Electronic module closed loop control	**Universal**			**Min/Max adjustment accel/decel ramps command input**		**Technology function**		**Design series** (not required for ordering)

Code	Function
0	Standard
1	Linearization option

Technical data

General		
Model		Module package for snap-on mounting on EN 50022 rail
Package material		Polycarbonate
Inflammability class		V0 acc. UL 94
Installation position		unrestricted
Ambient temperature range	[°C]	-20...+60
Protection class		IP 20 acc. EN 60529
$MTTF_D$ value	[years]	150
Weight	[g]	160
Electrical		
Duty ratio	[%]	100
Supply voltage	[VDC]	18...30, ripple < 5 % eff., surge free
Current consumption max.	[mA]	100
Pre-fusing	[mA]	500
Command signal options	[V]	+10...0...-10, ripple <0.01 % eff., surge free, Ri = 100 kOhm
	[mA]	+20...0...-20, ripple <0.01 % eff., surge free, Ri = <250 Ohm
	[mA]	4...12...20, ripple <0.01 % eff., surge free, Ri = <250 Ohm <3.6 mA = solenoid output off, >3.8 mA = solenoid output on (acc. NAMUR NE43)
Input signal resolution	[%]	0.025
Differential input voltage max.	[V]	30 for terminals 5 und 6 against PE (terminal 8)
Enable signal	[V]	0...1: Off / 5...30: On / Ri = 100 kOhm
Status signal	[V]	0...0.5: Off / Us: On / rated max. 15 mA
Monitor signal	[V]	+10...0...-10, rated max. 5 mA, signal resolution 0.4 %
Output signal options	[V]	+10...0...-10, rated max. 15 mA
	[mA]	+20...0...-20, Ro < 500 Ohm
	[mA]	+50...0...-50, Ro < 200 Ohm
	[mA]	4...12...20, Ro < 500 Ohm
Output signal resolution	[%]	0.025
Potentiometer supply	[V]	+10...0...-10 2 %, rated max. 15 mA
Sensor supply	[V]	18...30 (Us), rated max. 100 mA
Adjustment ranges Min	[%]	0...50
Max	[%]	50...100
Ramp	[s]	0...32.5
Zero offset	[%]	+100...-100
Interface		RS 232C, DSub 9pole male for null modem cable
EMC		EN 50081-2, EN 50082-2
Connection		Screw terminals 0.2...2.5 mm², disconnectable
Cable specification	[mm²]	0.5 overall braid shield (AWG20)
Cable length	[m]	50
Options		
Technology function	Code1	Software adjustable transfer function with 10 compensation points for linearization of valve behaviour

Block diagram

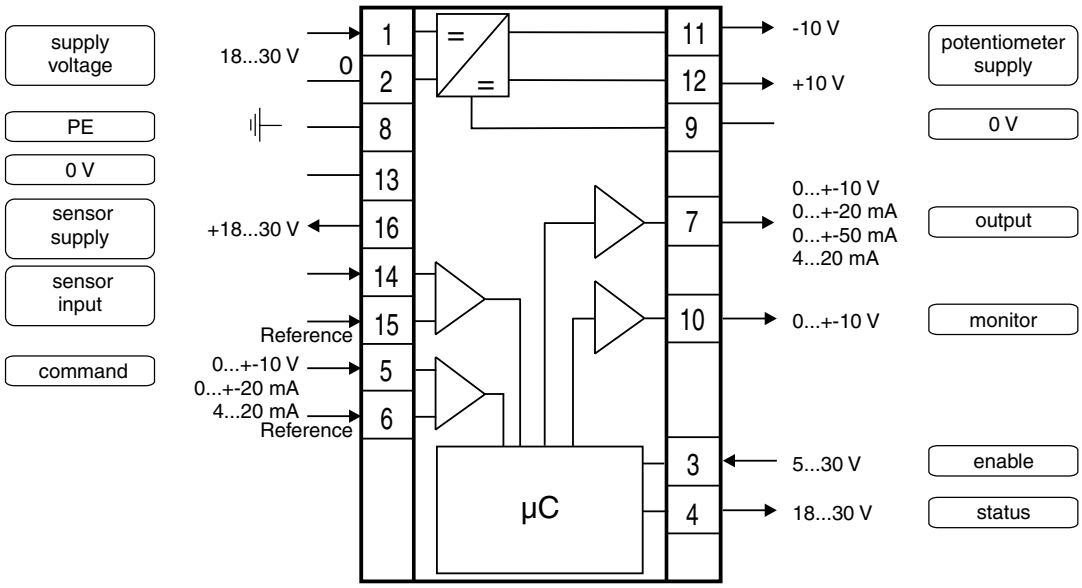

Signal flow diagram

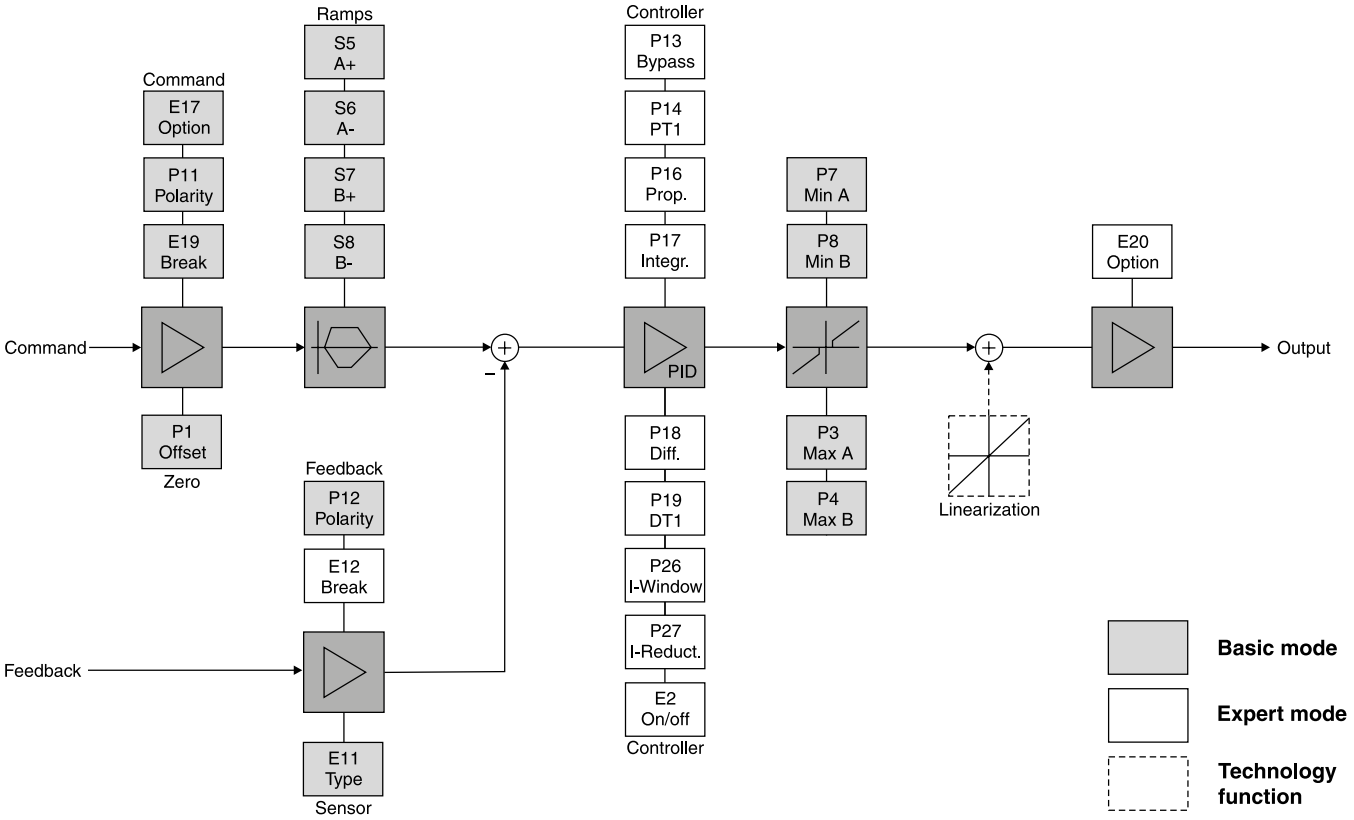

Dimensions

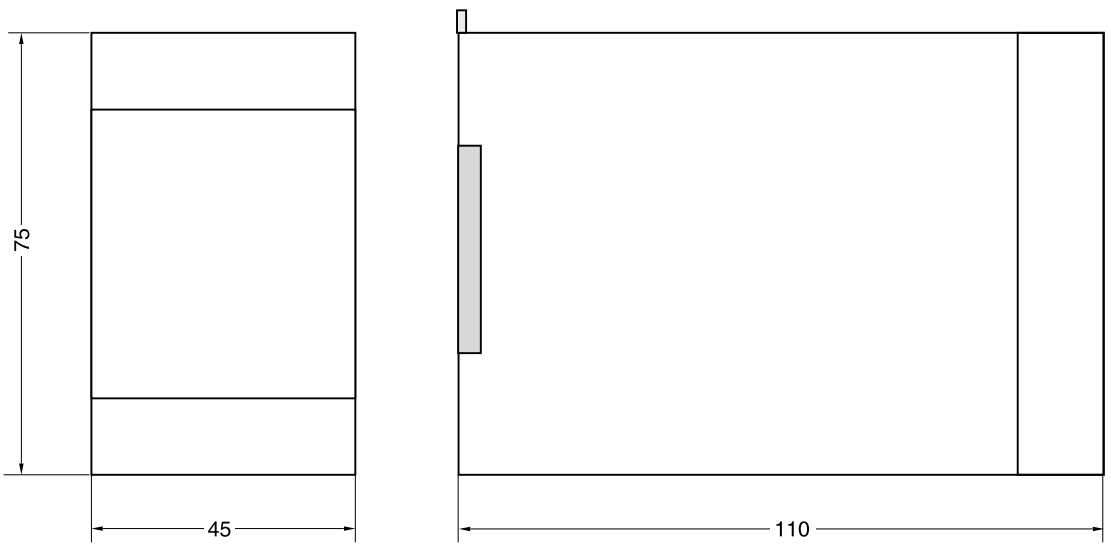

11

ProPxD interface program

The ProPxD software permits comfortable parameter setting for the module electronics. Via the clearly arranged entry mask the parameters can be monitored and modified. Storage of complete parameter sets is possible as well as printout or record as a text file for further documentation. Stored parameter sets may be loaded anytime and transmitted to other valves. Inside the electronics a nonvolatile memory stores the data with the option for recalling or modification.

The PC software can be downloaded free of charge at www.parker.com/euro_hcd – see page “Support" or directly at www.parker.com/propxd.

Features

- Comfortable editing of all parameters
- Depiction and documentation of parameter sets
- Storage and loading of optimized parameter adjustments
- Executable with all actual Windows® operating systems from Windows® XP upwards
- Plain communication between PC and electronics via serial interface RS232C

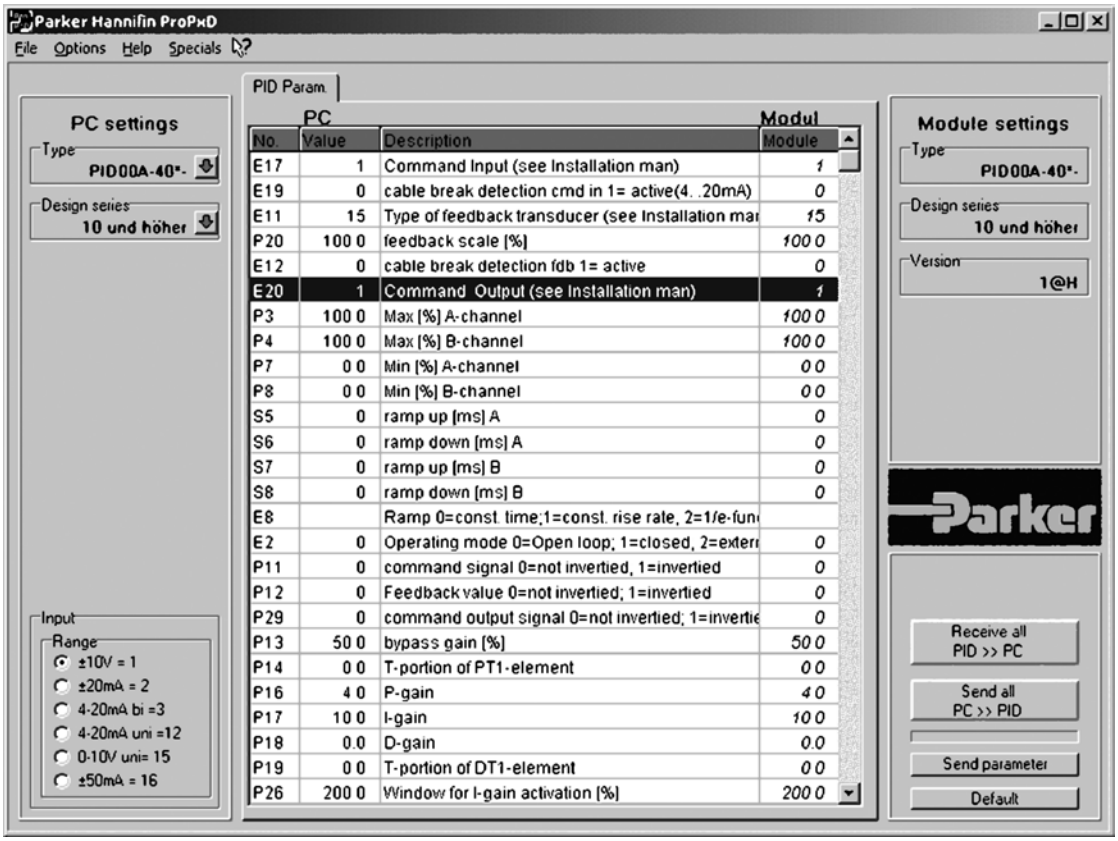

The Compax3F is a part of the servo drive family of Parker Hannifin. It is especially designed for the requirements of electrohydraulic systems and in particular for position und force control of electrohydraulic axis.



Attention:

For application support and customized software, please contact your local Parker representative.

Large drive range

- Valves:
  - Proportional direction control valves
  - Proportional pressure relief- and pressure reducing valves
  - Flow valves
- Drives:
  - Cylinders
  - Rotary drives
  - Motors

Range of application

- Closed loop position and force control of linear cylinders and rotary drives
- Switching between position and force control
- Synchronous run with up to 64 axes

Typical applications

- Feeder axis
- Position and force control of press cylinders in material forming machines
- Roller clearance control in roller presses
- Die casting machines
- Custom-designed software packages on request

Ordering Code

C3	F001	D2	F12			
Series				Interface	Technology functions	Options

Code	Interface	T11	T30	T40
I11	Digital inputs/outputs		•	•
I12	Digital inputs/outputs	•		
I20	Profibus DP V0/V1/V2 (12 Mbit/s)	•	•	•
I21	CANopen		•	•
I22	DeviceNet		•	•
I30	PowerLink		•	•
I31	EtherCAT		•	•
I32	Profinet	•	•	•

Code	Options
M00	Standards
M10	Extension 12 digital I/Os & HEDA (motion bus)
M11	HEDA (motionbus)
M12	Extension 12 digital I/Os

Code	Technology functions
T11	Positioning/pressure and force control
T30	Programmable motion control according to IEC61131
T40	Electronic Cam

Connection set for Compax3F included in delivery.

Complete kit with mating plug connectors (X1, X2 and X3) for Compax3 connectors, special shield connecting terminal and snap-on foot for mounting rail

Function	Motion control with motion profils. Suitable for position and force/pressure control
Housing / protection class	closed metal housing, isolation according to VDE 0160 / IP 20
Supply voltage [VDC] Current requirements [A]	21...27, ripple <1VSS 0,8 for the device, digital outputs 100 mA each
Supported feedback-systems	• Analog 0..20 mA, 4..20 mA, ±10 V • Start-Stop-Interface • SSI-Interface • EnDat2.2-Interface • 1VSS (max. 400 kHz) Interface, 13.5 Bit / Distance coding • TTL (RS422) (max. 5 MHz), internal post-quadrature resolution
Set point generator	• Jerk-limited ramps • Travel data in increments, mm, inches or variable by scale factor • Specification of speed, acceleration, delay and jerk factor • Force/pressure inputs in N, psi, etc. variable by scale factor
Monitoring functions	• Power/auxiliary supply range • Following error monitoring • Hard- and software switches
Inputs and Outputs	• 8 control inputs: 24 VDC / 10 kOhm • 4 control outputs Active HIGH / short-circuit protected / 24 V / 100 mA • 4 analog current input (14 Bit) • 2 analog voltage input (14 Bit) • 4 analog outputs (16 Bit, current or voltage) switchable in pairs
RS232 / RS485 (switchable) RS232: RS485 (2 or 4-wire):	 • 115200 Baud • Word length 8 bits, 1 start bit, 1 stop bit • Hardware handshake XON, XOFF • 9600, 19200, 38400, 57600 or 115200 Baud • Word length 7/8 Bit, 1 Start-, 1 Stop bit • Parity (switchable) even/odd
Bus systems	• Profibus DP V0-V2 (I20), 12 Mbit/s, PROFIdrive-Profil Drive technology • CANopen (CiADS402) (I21) • DeviceNet (I22) • PowerLink (I30) • EtherCAT (I31) • Profinet (I32)
CE compliance	• EMC interference emission/limit values for industrial utilization according to EN61 800-3 first environment (commercial and residential area), class A via integrated mains filter for up to 10m cable length, otherwise with external mains filter • EMC immunity/limit values for industrial utilization according to EN61 800-3
Insulation requirements	• Protection class I according to EN 50178 (VDE 0160 part 1) • Contact protection: according to DIN VDE 0106, part 100 • Overvoltage: Voltage class III according to HD 625 (VDE 0110-1) • Degree of contamination 2 according to HD 625 (VDE 0110 part 1) and EN 50178 (VDE 0160 part 1)
Environmental conditions General environmental conditions acc. to EN 60 721-3-1 to 3-3	 • Climate (temperature / humidity / barometric pressure) • Class 3K3
Permissible ambient temperature	• Operation: 0 to +45 °C class 3K3 • Storage: -25 to +70 °C class 2K3 • Transport: -25 to +70 °C class 2K3
Tolerated humidity: non condensing	• Operation: <= 85 % class 2K3 • Storage: <= 95 % class 3K3 (relative humidity) • Transport: <= 95 % class 2K3
Elevation of operating site: <=1000 m above sea level for 100 % load ratings	• Please inquire for greater elevations • Protection class IP20 according EN 60 529
EMC directives and harmonised EC norms	• EC low voltage directive 73/23/EEC and RL 93/68/EEC: EN 50 178, General industrial safety norm Equipping electric power systems with electronic operating equipment HD 625, general electrical safety. Insulation principles for electrical operating equipment EN 60 204-1, Machinery norm, partly applied • EC-EMC directive 89/336/EEC: EN 61 800-3, EMC norm Product standard for variable speed drives EN 50 081-2 ... 50 082-2, EN 61 000-4-2 ...61 000-4-5
UL-Certification	USL according to UL508 (listed) / CNL according to C22.2 No: 142-M1987 (listed) Certified: E-File-No: E198563
Weight [kg]	2.0

Application example

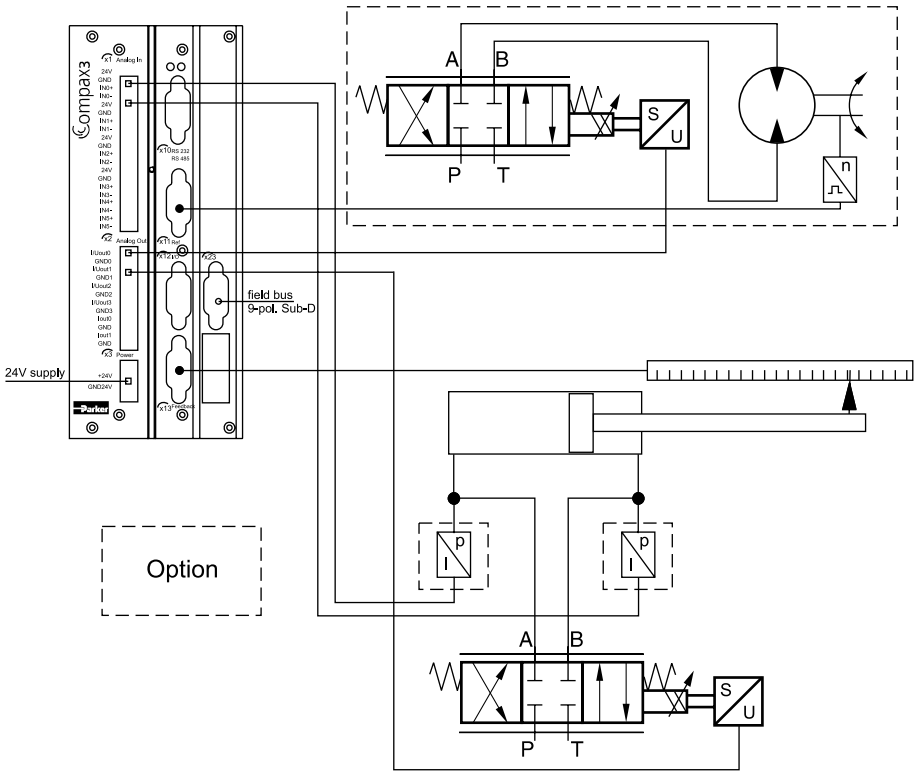

Dimensions

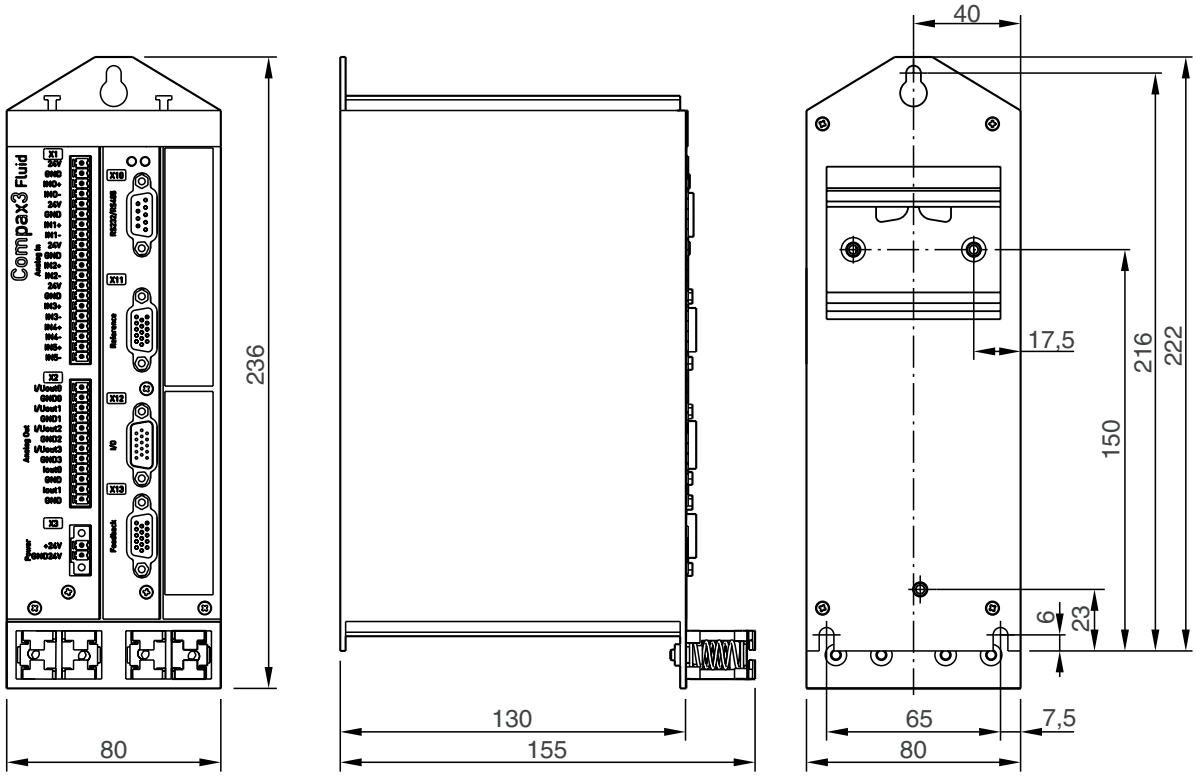

11

Project development, commissioning and programming

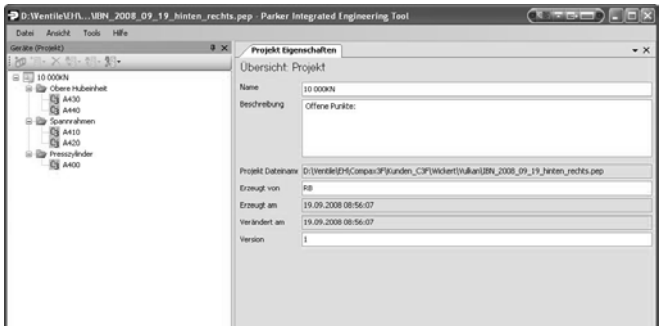

- Compax3 ServoManager
  - Intuitively understandable user interface
  - Wizard technology
  - Online help
  - Oscilloscope function
  - Optimized co-ordination of complete mechatronic systems
- Valve and Drive manager
  - All technical data of Parker valves, cylinders and drives available
  - Additionally support through the Compax3F Hydraulics-Manager by configuration of user defined valves and drives.

Software download, free of charge:
www.compax3.com

Operator Panels

Control equipment for all text and graphics applications in industrial environments, from two-line displays to touch-panels using field busses:

- Profibus DP
- CANopen
- DeviceNET
- Interbus-S

For further information please refer to POP: "Parker Operator Panels". Download: www.parker-eme.com/pop.

In addition to drivers for Compax3/Compax3 powerPLmC, drivers for other PLC products can be integrated on request.



ActiveX plug-in for Integration with the Office enviroment

- Office and industrial environments are constantly growing closer together.
- The use of ActiveX technology allows simple integration into Office application.

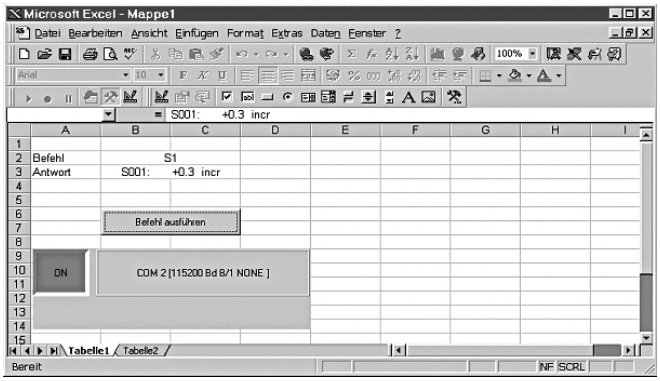

Interface - Field bus

- Profibus DP
- CANopen (CiADS402)
- DeviceNet
- PowerLink
- EtherCAT
- Profinet
- Address configurable via Dip switch

11

International standards in programming

- Programming system
  - CoDeSys
- Programming language
  - IEC61131-3
  - Function modules based on PLCopen

Jerk-limited set point generation, resulting in

- Gentle handling of the items being moved
- Increased service life of mechanical components
- Overshoot-free positioning
- Reduced excitation of mechanical resonance frequencies

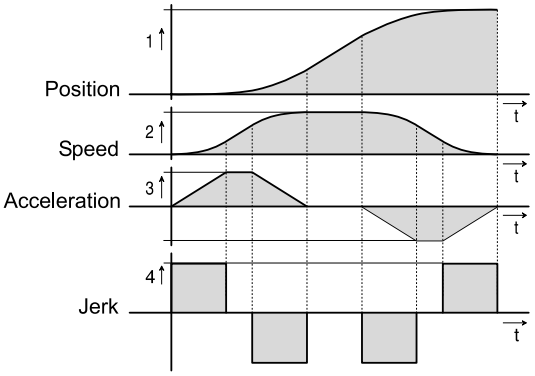

Control

a) General

- 2 control loops for each axis for combined position and force/pressure control

b) Position control

- Automatic controller design for position control
  - User-oriented optimization of parameters
- Feed forward control of speed and acceleration which results in:
  - Optimization of the response behaviour
  - Minimization of the following error

c) Force/Pressure controller

- PID controller with feed forward control of speed

d) 2-axis synchronous run and hydraulic specific functions

- Realization of many different circuit concepts with up to 4 proportional valves possible
- Linearization functions:
  - Consideration of the area of differential cylinders
  - Inverting of the valve set value
  - Compensation of the load pressure (additional pressure sensors necessary)
  - Correction of the nonlinear flow characteristic of the valve
  - Overlap compensation
  - Valve zero point correction
  - Valve set value filters
  - Valve set value limitation
  - All functions for each valve individually available
  - Automatic configuration by component selection in the Compax3 ServoManager

e) Custom-designed software packages on request

Set up controller optimization

- Compax3F HydraulicsManager
  - All necessary technical data of Parker valves and drives are available
  - additional supported
- Test movement for automatic controller attitude
- Optimization with integrated oscilloscope function
- Automatic pre-setting of the controller for position control possible

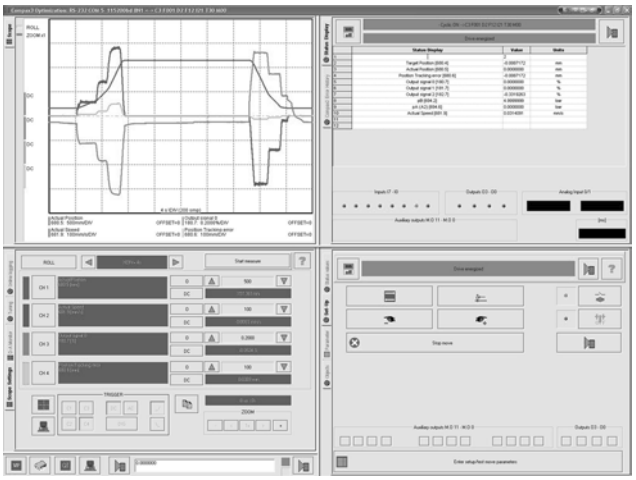

Overview technology functions

	T11	T30	T40
Set tables for up to 31 motion profiles	x		
Absolute or relative positioning	x	x	x
Force/pressure control	x	x	x
Electronic Gearbox	x	x	x
Dynamic positioning	x	x	x
Hydraulic specific control technology	x	x	x
Reg-related positioning	x	x	x
Programmable according to IEC61131-3		x	x
Programming system CoDeSys		x	x
Up to 6500 instructions		x	x
Recipe table with 288 variables		x	x
PLCopen		x	x
Mark synchronization			x
Cam switching mechanism			x
Cam profiles			x
Coupling and decoupling function			x
Custom-designed software packages*		O	O
Digital I/Os (RS232/485)	x	x	x
Profibus	O	O	O
CANopen		O	O
DeviceNet		O	O
Ethernet Powerlink		O	O
EtherCAT		O	O
Profinet	O	O	O

x = Standard
O = Optional
* on request

11

Benefits
- No programming skills necessary
- Set table with various motion
- Full controller range available
- An ideal basis for many applications in high-performance motion automation

Function range T11
- Set tables for positioning, pressure and force control up to 31 motion profiles:
  - Absolute or relative positioning
  - Force/pressure control
  - Speed control
  - Electronic gearing
- Superimposed force and pressure control
- Controller switching between position and force/pressure control

Extended Function range
- Absolute force control
- Superimposed force and pressure control
- Controller switching between position and force/pressure control
- 2-axis synchronous

Absolute or relative positioning
A motion set defines a complete motion with all settable parameters
1. Target position
2. Travel speed
3. Maximum acceleration
4. Maximum deceleration
5. Maximum jerk

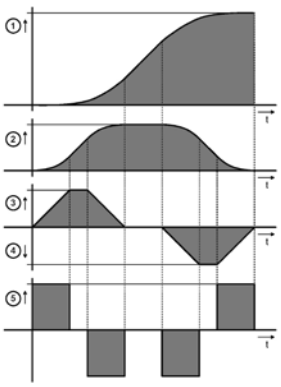

Stop movement
The Stop set interrupts the current motion set

Reg-related positioning
For registration mark-related positioning, 2 motions are defined:
- RegSearch: Search of an external signal, e.g. a registration mark on a product
- RegMove: The external signal interrupts the search movement and the second movement by an offset follows without transition
- Precision of the registration mark detection: <1µs

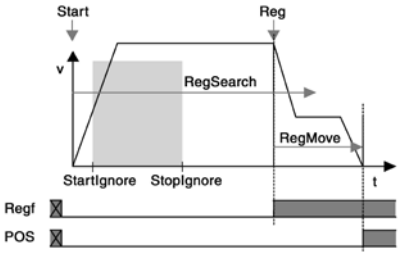

Electronic Gearbox:
Motion synchronized to a master axis with any transmission ratio. The position of a master axis can be detected via:
- ±10 V analog input
- Step/direction command Input
- the encoder input or
- HEDA, with Compax3 Master

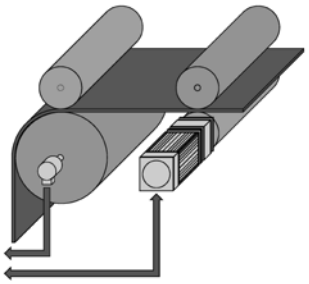

Dynamic positioning
A new motion profile can be selected during a positioning sequence - a smooth transition takes place.

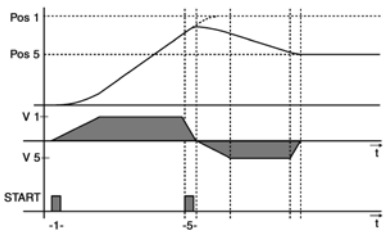

11

General

Due to its high flexibility and efficiency the Compax3 motion control according to PLCopen is for most applications the optimal basis for decentralized motion control.

Positioning with function modules based on PLCopen

- Programmable based on IEC61131-3
- Programming system: CoDeSys
- Up to 6500 instructions
- 500 16-bit variables / 150 32-bit variables
- Recipe table with 288 variables
- 3 16-bit saved variables (power failure protected) / 3 32-bit saved variables (power failure protected)
- PLCopen-function modules:
  - Positioning: absolute, relative, additive and continuous
  - Machine zero
  - Stop, energizing the power stage, quit
  - Position, device status, reading axis error
  - Electronic gearbox (Mc_GearIn)
- IEC61131-3-standard modules:
  - Up to 8 timers (TON, TOF, TP)
  - Trigger (R_TRIG, F_TRIG)
  - Flip-flops (RS, SR)
  - Counters (CTU, CTD, CTUD)
- Device-specific function modules:
  - C3_Input: reading digital inputs
  - C3_Output: writing digital inputs
  - C3_ReadArray: access to recipe table
- Inputs/outputs:
  - 8 digital inputs (24 V level)
  - 4 digital outputs (24 V level)
  - 6 analog inputs (14 bits)
  - 4 analog outputs (16 bits)
  - Optional addition of 12 digital inputs/outputs

PLCopen function blocks

- Absolute positioning
- Relative positioning
- Additive positioning
- Continuous positioning
- Stop
- Machine zero
- Energizing the power output stage
- Reading device status
- Reading axis error
- Acknowledging errors
- Reading the current position
- Electronic gearbox (gearing)

Example of an field bus interface controlled IEC61131-application

- 2 control words are placed on the cyclic channel of the bus.
- The position data records (position, speed, acceleration etc.) are stored in a table (array).
- The desired position data record is selected with Controlword_2.
- The individual bits of Controlword_1 control positioning.
- A return message is sent via a status word on the cyclic channel of the bus.

Example of a bus interface controlled IEC61131 application

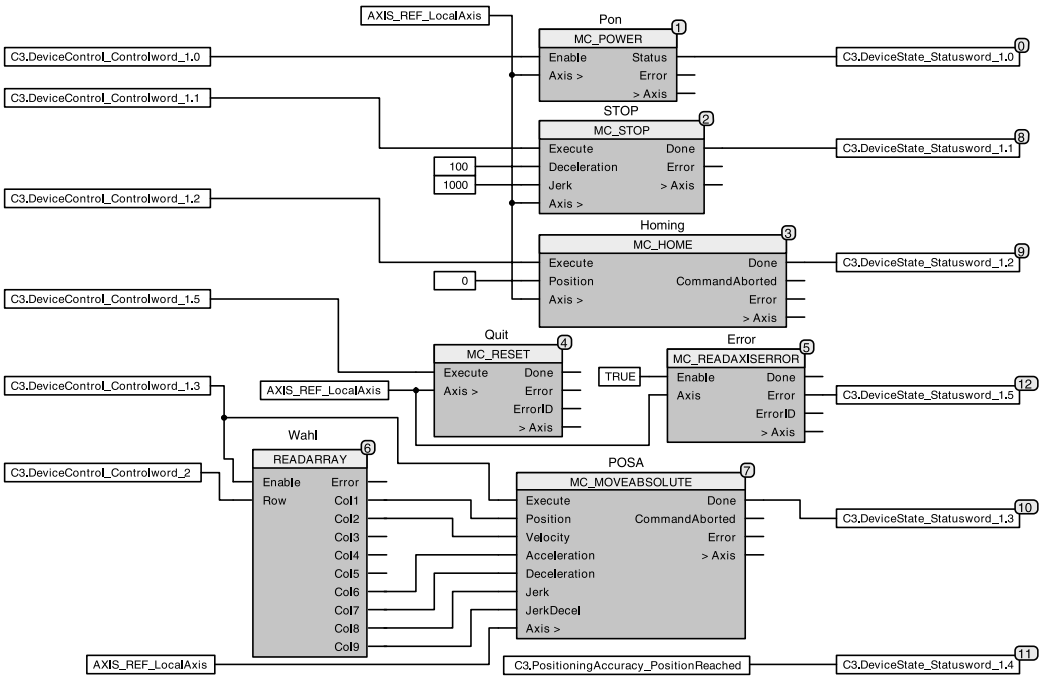

General

Compax3 T40 is able to simulate mechanical cams and cam switching mechanisms electronically. The T40 electronic cam was especially optimized for:

- The packaging machine industry
- The printing industry
- All applications, where a mechanical cam is to be replaced by a flexible, cyclic electronic solution

This helps to solve discontinuous material supply, flying-knive and similar drive applications using distributed drive technology.

Compax3 T40 supports both real and virtual master movements. In addition, the user can switch to other cam profiles or cam segments ‚on the fly'.

Programming is carried out in the well-known IEC61131-3 environment.

With the aid of the cam function modules and CamDesigner, cam applications can be implemented very easily.

Function T40

- Technology functions of the T30 version fully integrated and available
- Master position acquisition
- Mark synchronization
- Cam switching mechanism
- Coupling and decoupling function
- Cam profiles
- Cam memory
- Cam creation with CamDesigner

Master position acquisition

- Acquisition by incremental encoder
- Acquisition by the HEDA real-time bus
- Virtual Master:

A second axis in the IEC program can be used to program a motion profile, which serves as a master for one or several axes.

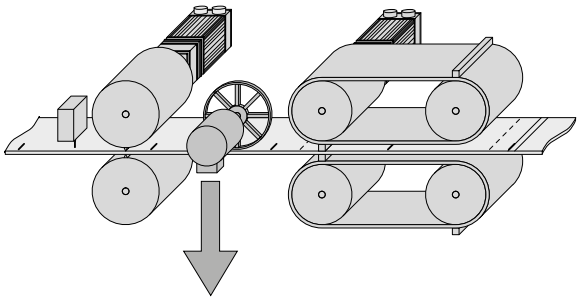

Mark synchronization

- Master or slave oriented (simultaneous, cam-independent)
- Highly-precise mark recognition (accuracy <1µs; Touch-probe)

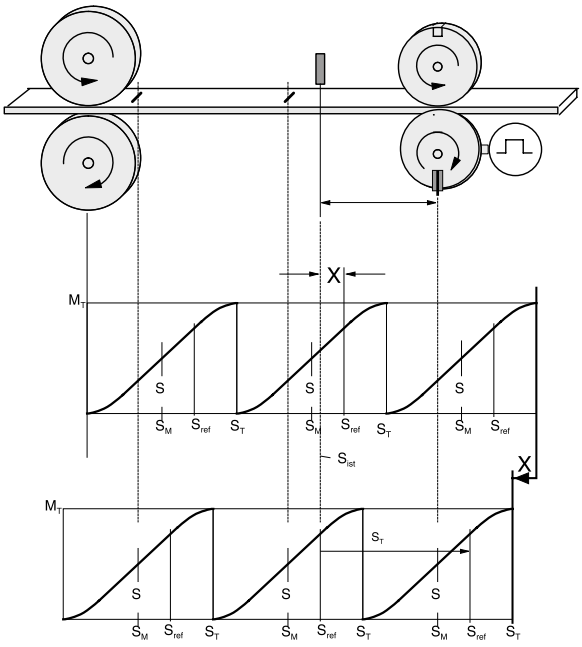

Cam switching mechanism

- 36 cams with individual profiles
- 4 fast cams (125 µs per cam) standard: 500 µs
- 32 serial cams, 16 ms/cam cycle (0.5 ms/cam)
- Delay-time compensated cams: Compax3 can advance the cam to compensate for delays in switching elements.

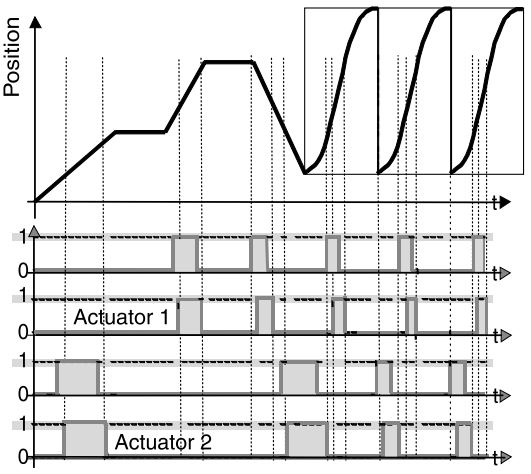

11

Coupling and decoupling functions

- By means of a set point generator
- By means of a change-over function
- Without overspeeding by coupling over several master cycles
- Virtually free set-up of the coupling and decoupling movement
- Master-guided coupling movement
- Random standstill position

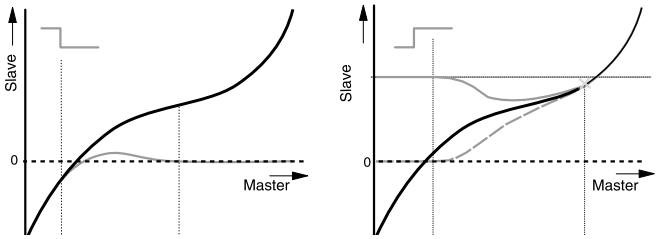

Cam profiles

- Up to 20 cam segments can be produced by:
- Virtually random cam links (forwards and backwards)
- Freely programmable event-controlled cam branches
- Scalable cam segments and complete cam profiles

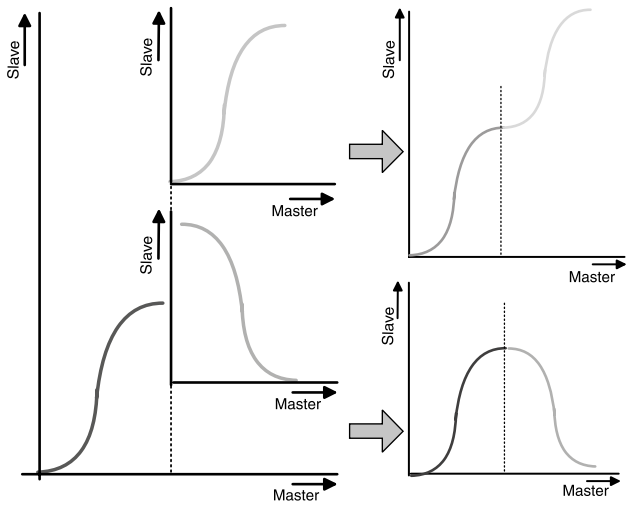

Cam memory

- 10,000 points (Master/Slave) in 24-bit format
- High-precision profile generation:
  - Variable point spacing with full backup of the current-master and slave coordinates (even if the power fails)
  - Linear interpolation between points
- Cam memory for up to 20 curves

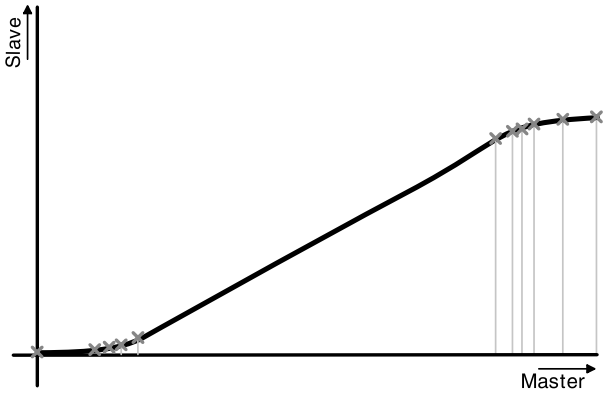

11

Connection of high-level controllers

a) Control via digital inputs/outputs Compax3 I11T30 / I11T40 / I12T11

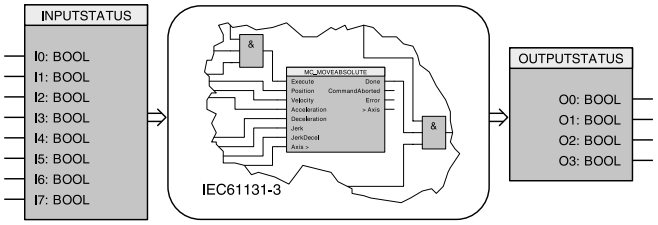

The digital I/Os can be optionally extended by 12 I/Os (M10 and M12 option).

b) Control via Profibus, Compax3 I20T11 / I20T30 / I20T40

Profibus-ratings	
DP-Versions	DPV0 / DPV1
Baud rate [MBit/s]	up to 12
Profibus ID	C320

c) Control via CANopen, Compax3 I21T30 / I21T40

CANopen-ratings	
Baud rate [kBit/s]	20, 50, 100, 125, 250, 500, 800, 1000
Service-Data-Object	SDO1
Process-Data-Objects	PDO1, ... PDO4

d) Control via DeviceNet, Compax3 I22T30 / I22T40

DeviceNet-ratings	
I/O - data	up to 32 bytes
Baud rate [kBit/s]	125...500
Nodes	up to 63 Slaves

e) Control via Ethernet Powerlink, Compax3 I30T30 / I30T40

Ethernet Powerlink ratings	
Baud rate	100 Mbits (FastEthernet)
Cycle time	<200 µs; to 240 nodes

f) Control via EtherCAT Compax3 I31T30 / I31T40

EtherCAT-ratings	
Bau drate	100 Mbits (FastEthernet)
Cycle time	<200 µs; to 240 nodes

g) Control via Profinet I32T11 / I32T30 / I32T40

Profinet ratings	
Profinet version	Profinet IO (RT)
Transmission mode	100 BASE-TX (Full Duplex)
Profinet ID	C332

Software Tool C3 ServoManager

Configuration is carried out on a PC using the Compax3 ServoManager.

- Wizard-guided configuration
  - Automatic querying of all necessary entries
  - Graphically supported selection
- Setup mode
  - Moving individual axes
  - Predefined profiles
  - Convenient operation
  - Storage of defined profiles
  - Controller pre-setting possible
- Integrated 4-channel oscilloscope
  - Signal tracing directly on the PC
  - Various modes (single/normal/auto/roll)
  - Zoom function
  - Export as image or table (for example to Excel)

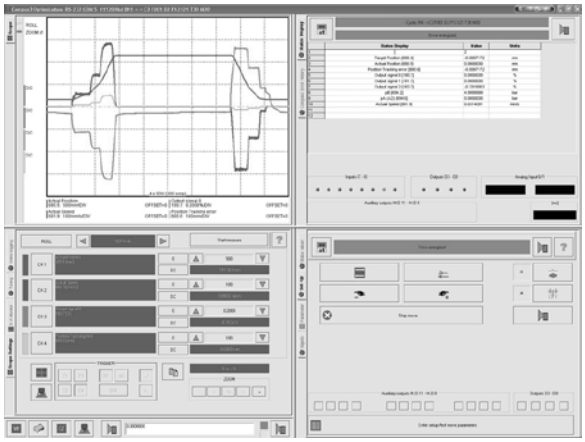

Software Tool HydraulicsManager

- Simple set up of customer valves, cylinders and drives.
- Technical data of all Parker valves, cylinders and drives available.



C3 HydraulicsManager valve database

Software Tool CamDesigner

- Standardized Nolte cam generating tool with:
  - Standard or extended range of functions
  - Evaluation of the motion profiles
  - Verification of the drive sizing
- Transition laws from VDI directive 2143:
  - Selection of motion laws
  - The CamDesigner basic version features 15 motion laws (based on the dwell-to-dwell (interpolation method)

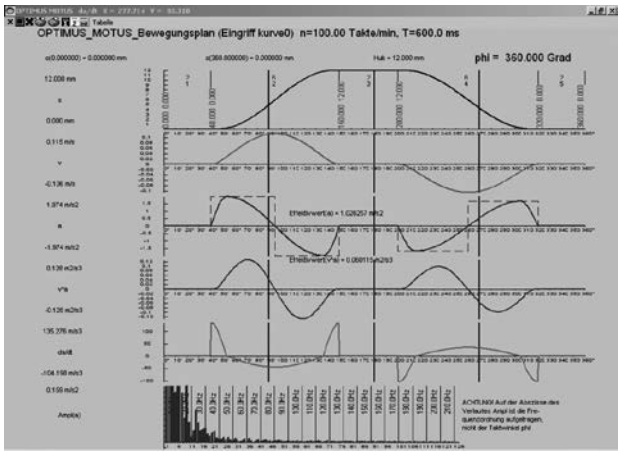

Evaluation of the motion profile

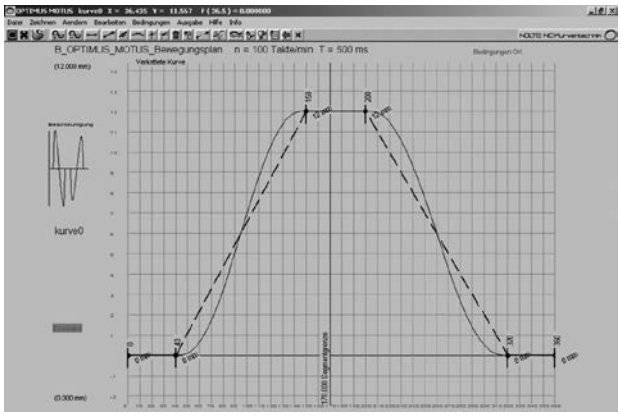

Cam generation with the integrated CamEditor

11

IEC61131-3 Programming language

IEC61131-3 is the only company- and product-independent programming language with worldwide support for industrial automation devices.

- IEC61131-3 includes graphical and textual programming languages:
  - Instruction list
  - Structured text
  - Ladder diagram
  - Sequential function chart
  - Function block diagram

Integrated standards offer:
- A trusted programming environment
- Standardized programming

Integrated standards reduce:
- The overhead of development
- Maintenance costs
- Software upkeep
- Training overhead

Integrated standards increase:
- Productivity
- Software quality
- Concentration on core competence

Examples

- Program development in IL

```
0001 FUNCTION_BLOCK AWL_EXAMPLE
0002 (* Sinus und CoSinus einer Zahl berechnen *)
0003 VAR_INPUT
0004    r1: REAL := 0.0;
0005 END_VAR
0006 VAR_OUTPUT
0007    sinus: REAL;
0008    cosinus: REAL := 9.9;
0009 END_VAR
```

```
0001    (* Den Sinus einer Zahl berechnen und mit 1000 multiplizieren *)
0002    LD      r1
0003    SIN
0004    MUL         1000.0
0005    ST      sinus
0006    (* Den Cosinus  einer Zahl berechnen und mit 1000 multiplizieren *)
0007    LD      r1
0008    COS
0009    MUL         1000.0
0010    ST      cosinus
0011
0012    (* Die Zahl weiterschalten *)
0013    LD      r1
0014    ADD         0.1
0015    ST      r1
0016
```

- Instruction list (IL)

```
LD      A
ANDN    B
ST      C
```

- Ladder diagram

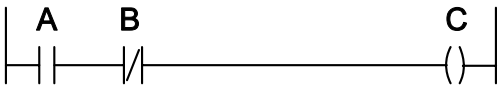

- Structured text

```
C := A AND NOT B
```

- Function plan

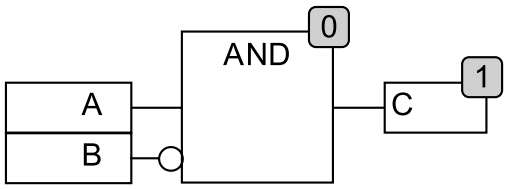

11

Function modules based on PLCopen

PLCopen is a product- and company independent organization that plays a significant role in supporting the IEC61131-3 programming language. Its specific tasks also include defining basic processes relevant to motion. The PLCopen organization consists of both users and manufacturers of automation components.

Parker Hannifin is an active member of the “Motion Control“ task force. This is a great advantage for the users of Parker drive technology, since they are constantly able to profit directly from the latest developments in PLCopen.

Professional development tool CoDeSys

CoDeSys is a development environment for programming that saves a significant amount of time as applications are created.

- One of the most powerful development environments available, established world-wide
- Universal programming platform for various devices
- Visual elements
- Library management for user-defined applications
- Context-sensitive help wizard
- Data exchange between devices from different manufacturers
- Complete online functionality
- Sophisticated technological features
- Standard function modules deposited

. . . and all this free of charge

Parker is a member of the “CoDeSys Automation Alliance“.

Program development in CFC

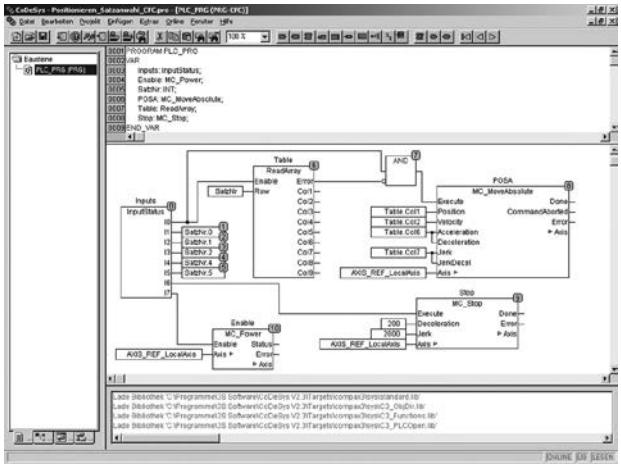

Project management

Saving an entire project (source file) including symbols and comments to make service calls easier, because there is no need for any project data on the device itself

- Archiving projects as ZIP files
- Creating user-specific libraries that can be reused as tested sections of programs
  - These libraries can be protected
  - Examples include winders, synchronization components etc.
- Various user levels make it possible to lock sections of the program with passwords
- Depending on the task at hand, users can select from among 5 IEC languages plus CFC. These languages can also be mixed

Connection set ZBH../.. (included in delivery)

Complete kit with mating plug connectors (X1, X2 and X3) for Compax3 connectors, special shield connecting terminal and snap-on foot for mounting rail.

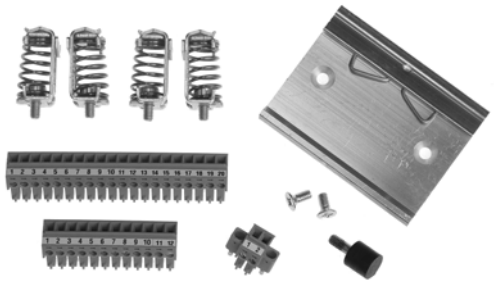

Feedback cable GBK../..

Connection to the transducer:

Under the designation “REK.. + GBK..“ (Feedback cable) we can deliver feedback connecting cables in various lengths to order.

- Prefabricated with plug and cable eye
- The plugs of the feedback cables contain a special surface area screening.
- Cable plans, if you wish to make up your own cables



Terminal block EAM06/..

For additional wiring of the inputs and outputs:

- Available with or without LED display
- Can be mounted in the control cabinet on a supporting rail
- Connection EAM06/.. via SSK23/..to X11, SSK24/.. to X12

RS232 cable SSK01/..

(in various lengths).

Configuration:

Via a PC with the aid of the Compax3 ServoManager.

Communication:

Communication with Compax3 either via RS232 or via RS485 in order to read or write into objects.



Profibus plug BUS08/01

- BUS08/01 with 2 cable inputs (1x BUS08/01 incoming, 1x BUS08/01 continuing) and screw terminals, as well as a switch for activating the terminating resistor. Set to ON for first and last bus node terminating resistor activated.

Profibus cable: SSL01/.. not prefabricated

- Special cable in any length for Profibus wiring (colors according to DESINA).



HEDA Bus

HEDA bus terminal connector (RJ45) BUS07/01:

- For the first and last Compax3 in the HEDA bus.

HEDA cable: SSK28/.. prefabricated in various lengths:

- Cable for HEDA bus wiring from Compax3-to-Compax3 or PC-to-Compax3 powerPLmC or wiring of
  - Ethernet Powerlink (I30)
  - EtherCAT (I51)
  - Profinet (I32)



CANbus plug BUS10/01

- BUS10/01 with 2 cable inputs (1x BUS10/01 incoming, 1x BUS10/01 continuing) and screw terminals, as well as a switch for activating the terminating resistor. Set to ON for first and last bus node terminating resistor activated

CANbus cable SSL02/.. not prefabricated

- Special cable in any length for CANbus wiring (colours according to DESINA)



Connection set for Compax 3										
for C3F001 D2 F12xxx	ZBH 02/04	Z	B	H	0	2	/		0	4
Terminal block										
for I/Os without luminous indicator	for X11, X12	E	A	M	0	6	/		0	1
for I/Os with luminous indicator	for X12	E	A	M	0	6	/		0	2
Interface cables and connectors										
PC-Compax3 (RS232)		S	S	K	0	1	/		...	...[1]
on X11/X13 (Transducer)	With flying leads	S	S	K	2	1	/		...	...[1]
on X12 (I/O digital)	With flying leads	S	S	K	2	2	/		...	...[1]
on X11(Ref/Analog)	For I/O terminal	S	S	K	2	3	/		...	...[1]
on X12 (I/Os digital)	For I/O terminal	S	S	K	2	4	/		...	...[1]
PC - POP (RS232)		S	S	K	2	5	/		...	...[1]
Compax3 - POP (RS485)		S	S	K	2	7	/	../	...	...[3]
Compax3 HEDA - Compax3 HEDA or PC - C3powerPLmC or Ethernet Powerlink (I30), EtherCAT (I31), Profinet (I32)		S	S	K	2	8	/		...	...[2]
Compax3 X11 - Compax3 X11 (Encoder coupling of 2 axes)		S	S	K	2	9	/		...	...[1]
HEDA bus terminal connector (for the 1st and the last Compax3 in the HEDA Bus)		B	U	S	0	7	/		0	1
Feedback cable for Balluff SSI transducer and start/stop		G	B	K	4	0	/		...	...[1]
Feedback cable for SSI transducer and start/stop	With flying leads	G	B	K	5	3	/		...	...[1]
Profibus cable [4]	Not prefabricated	S	S	L	0	1	/		...	...[1]
Profibus connector		B	U	S	0	8	/		0	1
CAN-Bus cable [4]	Not prefabricated	S	S	L	0	2	/		...	...[1]
CAN-Bus connector		B	U	S	1	0	/		0	1

Length code for SSK27

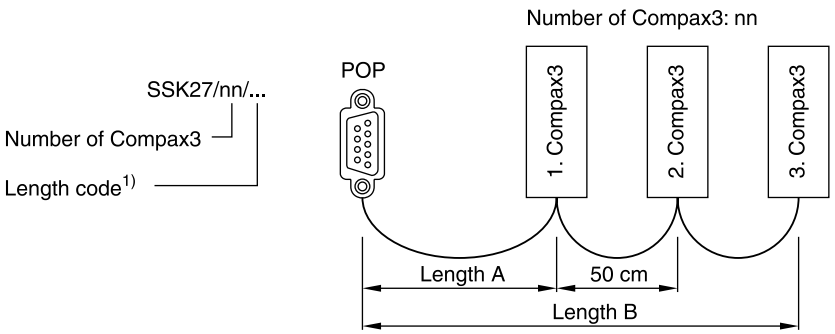

1) Length code

Length code 1 (Example: SSK01/09: Length 25 m)

Length [m]	1.0	2.5	5.0	7.5	10.0	12.5	15	20	25	30	50
Code	01	02	03	04	05	06	07	08	09	10	14

2) Length code for SSK28

Length code 2 (Example: SSK28/22: Length 3 m)

Length [m]	0.25	0.5	1.0	3.0	5.0	10.0
Code	20	21	01	22	03	05

3) Length code for SSK27

Length A: Cable or connection from POP with **one** Compax3 (POP - 1.Compax3), variable length according to length code[1]
(Example: SSK27/01/01: Length 1.0 m)

Length B: Cable or connection from POP with **more than one** Compax3 (nn > 01) (1.Compax3 - 2.Compax3 - …), length between Compax connectors is fixed to 50 cm, variable length A from POP with first Compax according to length code[1]
(Example: SSK27/03/01: Length 1.0 m)

4) Colours according to DESINA

The test unit EX00-M05 is suitable for testing and commissioning of all proportional and servo proportional valves with onboard electronics that are offered in this catalogue. For easy on-site service all necessary cables are securely located inside of the rugged case. The test unit provides all command signal sources and measuring ports for concerted and time saving control and diagnosis of the valves. For operation of the hybrid regenerative valves an additional switchable 24 V output is available.









Features

- Control of valves incorporating integrated electronics and central plug acc. EN 175201-804 (6-pin + PE)
- Built-in fuses
- Cable set included
- Lockable rugged box

Ordering code

EX **00** – **M05** – **10**

Test unit — **Design series**

Technical data

Design			Lockable rugged box, polypropylene (break proof)
Supply voltage		[V]	85...260, 50...60 Hz
Power consumption		[VA]	max. 160
Current consumption max.		[A]	1.3 at 230 V
Main input fuse		[A]	3.15 time lag
Required main supply fuse		[A]	16
Protection class			IP40
EMC			EN 61000-6-2
Valve central connection	Valve supply	[V]	24 (±5 %)
	Command voltage	[V]	0...±10 (±1 %), 0...10, 0...±20 mA, 0...20 mA, 4...12...20 mA, 4...20 mA
	Diagnostic output		0...±10 V / 0...±20 mA
	Enable signal	[V]	7.5 (±10 %)
Measurement terminals			For multimeter with Ri min = 10 kOhm
Display	Display digits		4
	Resolution		10 mV / 10 mA ; 1 digit
Main cord	Unit site		Cable inlet connector IEC320
	Main site		CEE 7/7 plug
	Cable length	[m]	2
Valve cords			A - control valves / B - DC valves
	Unit site		Connector Amphenol SV70 DIN 40040 / Connector M12x1 as per IEC61076-2-101
	Valve site		Female connector 6+PE acc. EN175201-804 / Female connector acc. EN175301-803
	Cable length	[m]	3
Ambient temperature		[°C]	0...40
Weight		[kg]	3.9
Dimensions		[mm]	L 305 x B 270 x H 144

Operator panel

Front

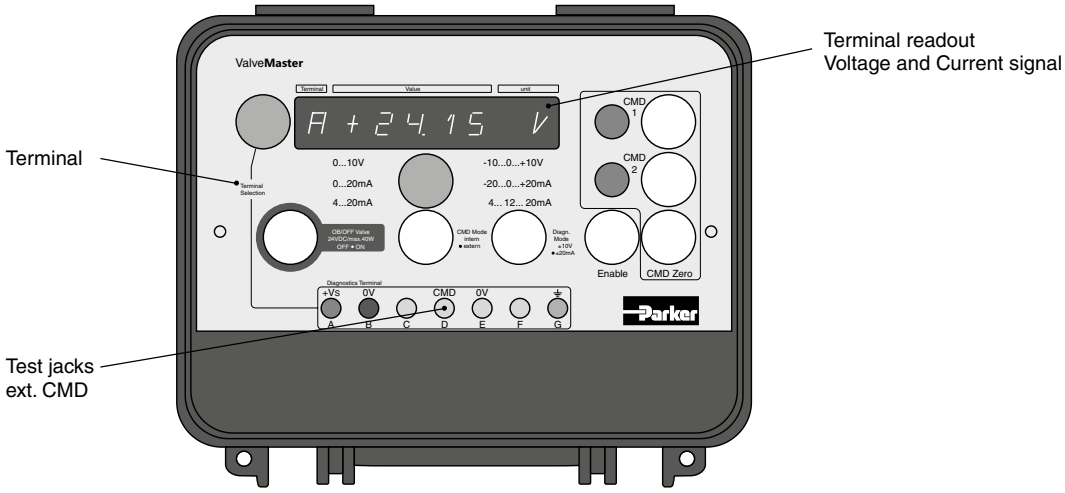

Rear

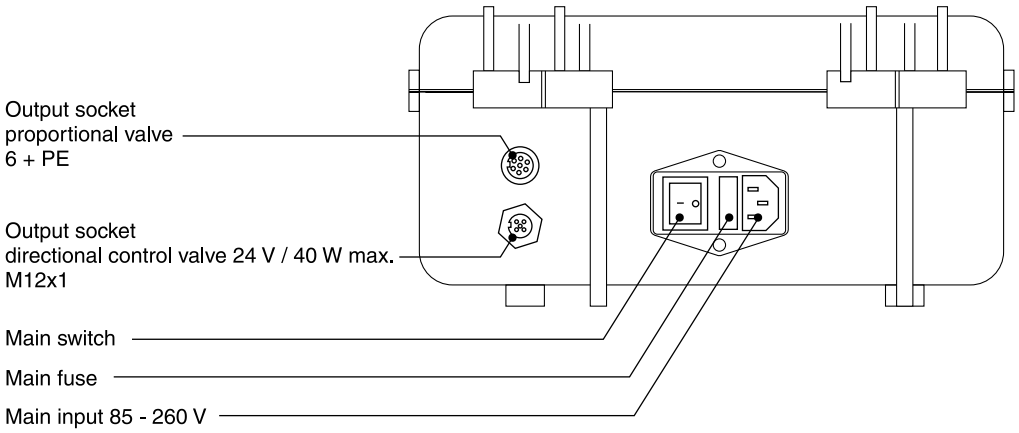

Wiring configuration

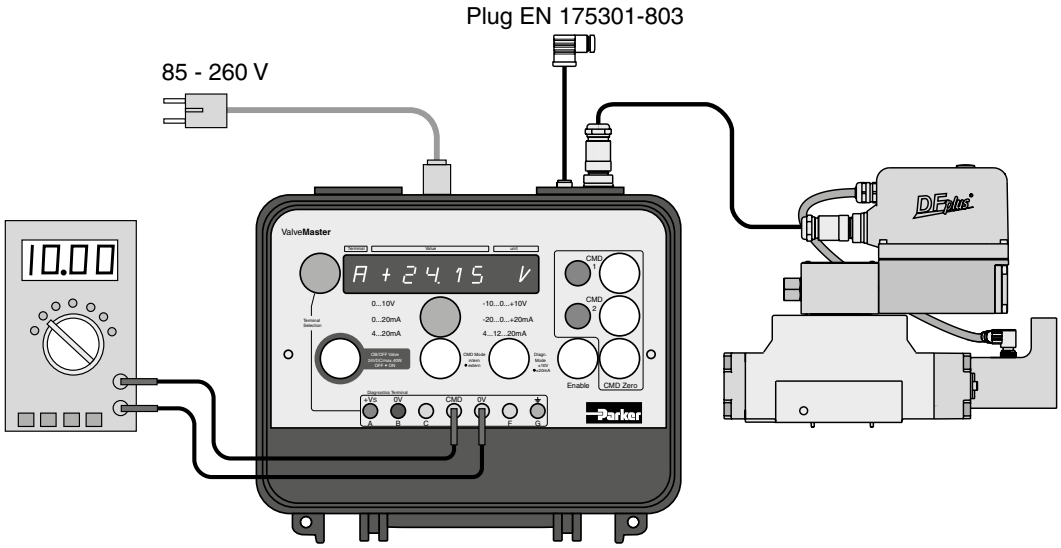

11

Notes

Series	Description	Size									Page
	DIN / ISO	06	10	16	25	32	40	50	63	80	
	Subplates										
SPD	Subplates, BSPP threads, DC valves	•	•	•	•						12-2
A	Subplates, metric threads, DC valves	•	•								12-7
SPP	Subplates, BSPP threads, pressure valves, DIN / ISO		•		•	•					12-8
A102	Subplates for pressure valves, styles VB and VM		•								12-11
MSP	Multi-station manifold, DC valves	•	•								12-12
	Cover, sandwich and adaptor plates										
	Symbols										12-19
PADA	Sandwich and adaptor plates	•	•								12-21
H06	Sandwich plates	•									12-22
CS06	Sandwich and cover plates	•									12-26
D51*	Cover plates	•	•								12-28
CB	Cartridge manifold block			•	•	•	•	•	•	•	12-30
	Plates for regenerative- and hybrid circuits, series D3DW, D3FB/FP, D31NW/FB/FC/FP										
	Intro										12-32
A10	Adaptor plates size 10		•								12-34
H10	Sandwich plates size 10		•								12-36
	Accessories for manifolds and systems										
BK	Bolt kits										12-38
TK	Tie rod kits										12-39
	Pressure gauge valves										
WM	Pressure gauge selector valve										12-40
	Pressure switches										
PSB	Pressure switches										12-42
SCPSD	Electronic pressure switch										12-47
	Pressure intensifiers										
SD500	Pressure intensifiers										12-53

12

Valve size DIN NG06, CETOP 03, NFPA D03

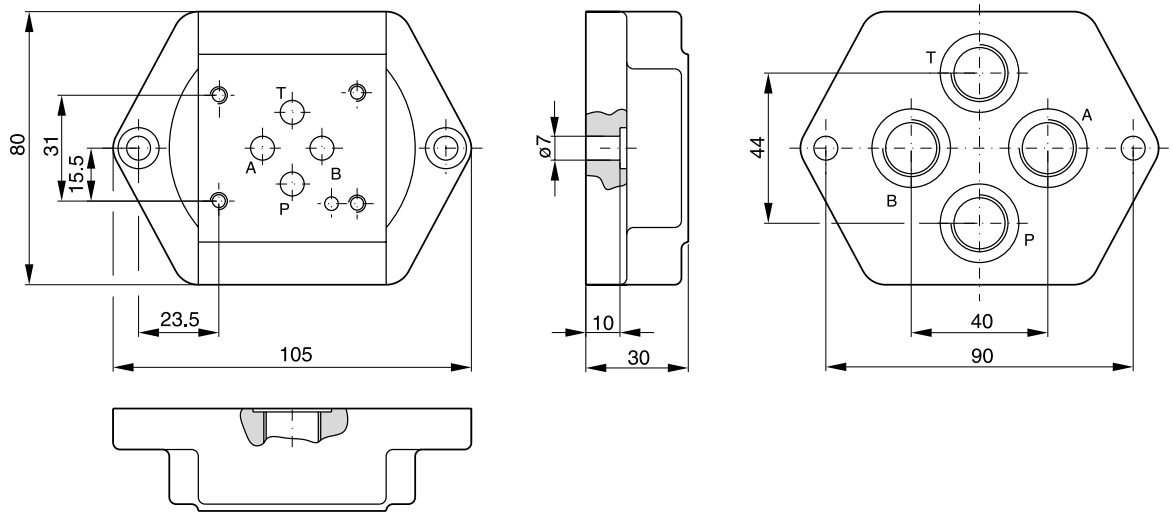

Ordering code	
SPD 22 B 910	P, A, B and T = G ¼
SPD 23 B 910	P, A, B and T = G ⅜

Valve size DIN NG06, CETOP 03, NFPA D03

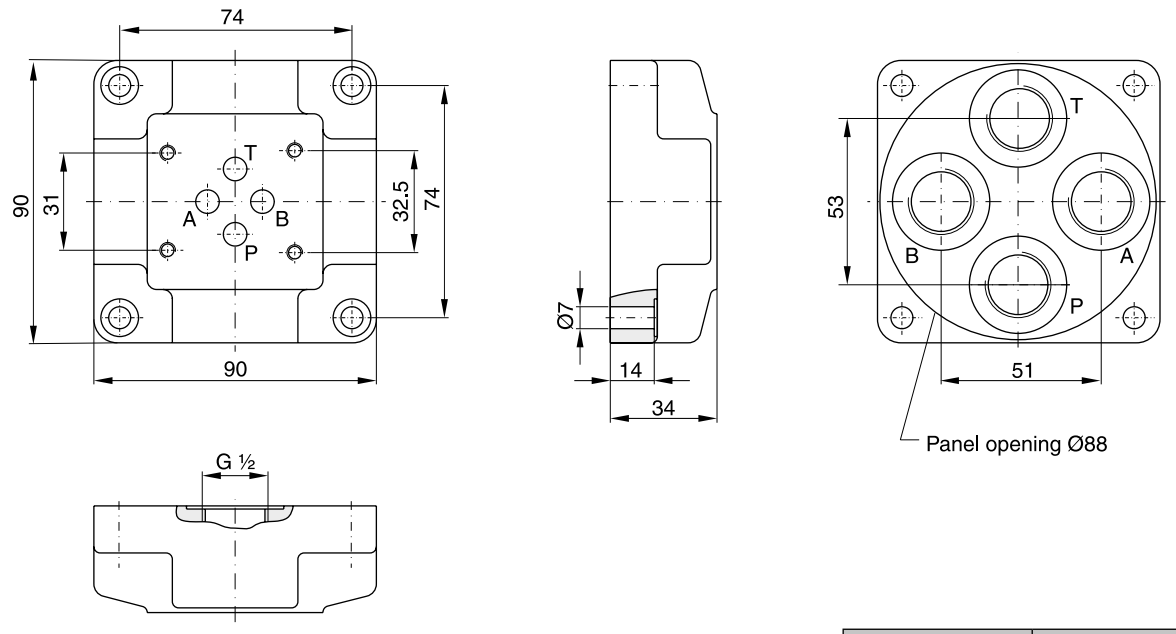

Ordering code	
SPD 24 B 910	P, A, B and T = G ½

Bold letters =
Short-term availability

Valve size DIN NG06, CETOP 03, NFPA D03

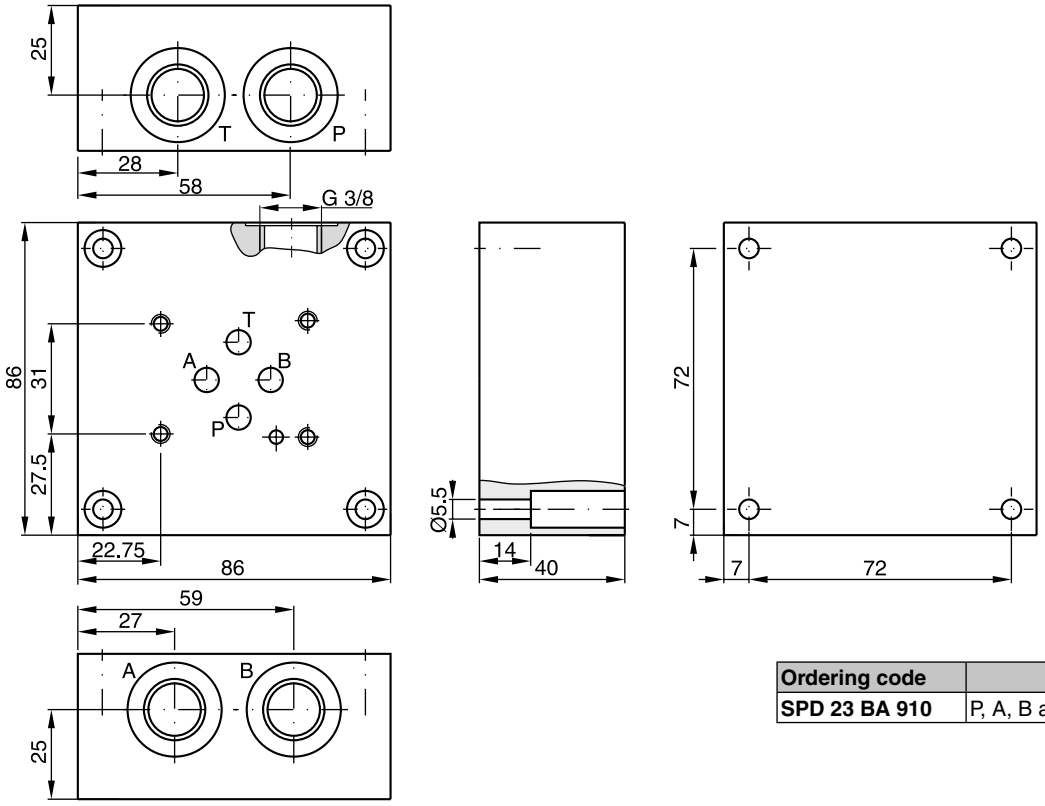

Ordering code	
SPD 23 BA 910	P, A, B and T = G ⅜

Valve size DIN NG10, CETOP 05, NFPA D05

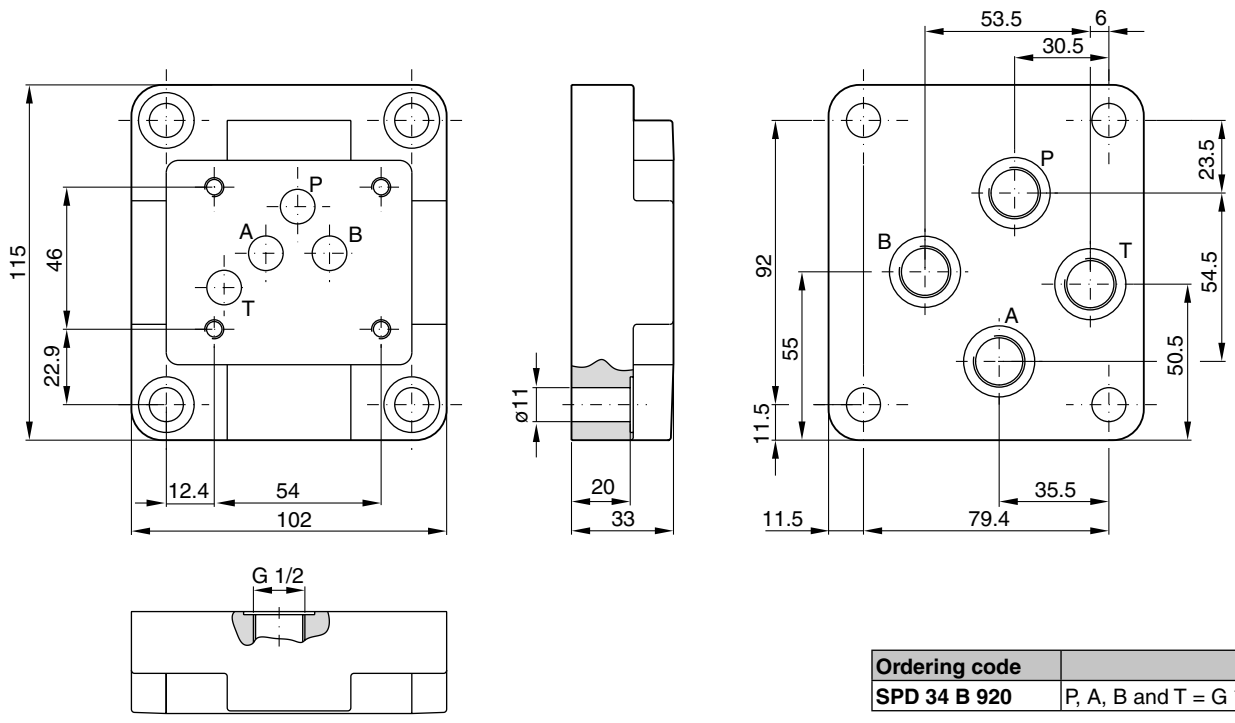

Ordering code	
SPD 34 B 920	P, A, B and T = G ½

Bold letters =
Short-term availability

Valve size DIN NG10, CETOP 05, NFPA D05

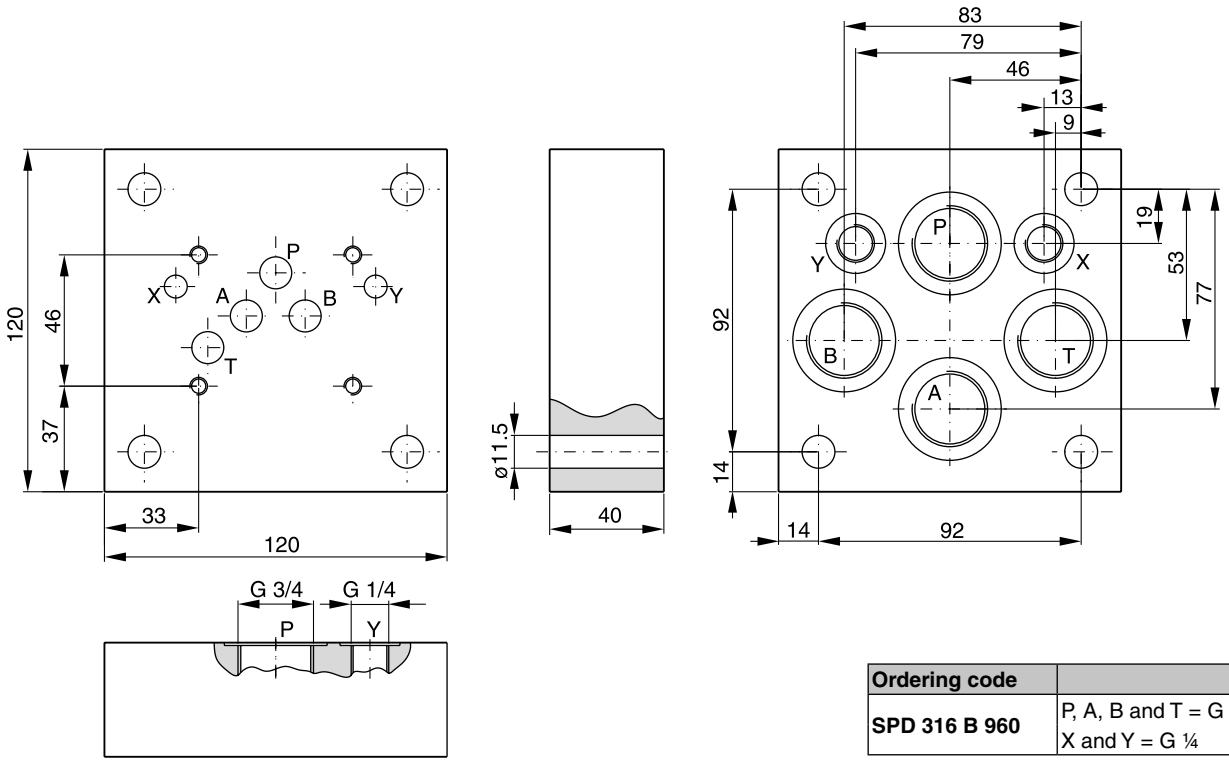

Ordering code	
SPD 316 B 960	P, A, B and T = G ¾ X and Y = G ¼

Valve size DIN NG10, CETOP 05, NFPA D05

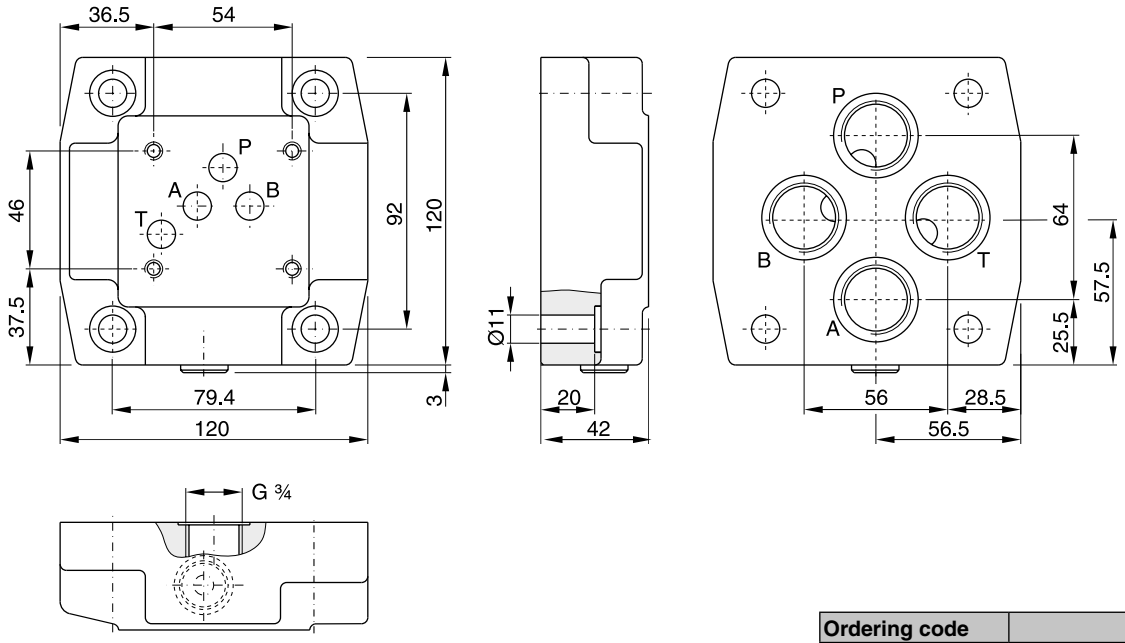

Ordering code	
SPD 36 B 920	P, A, B and T = G ¾

Bold letters =
Short-term availability

Valve size DIN NG16, CETOP 07, NFPA D07

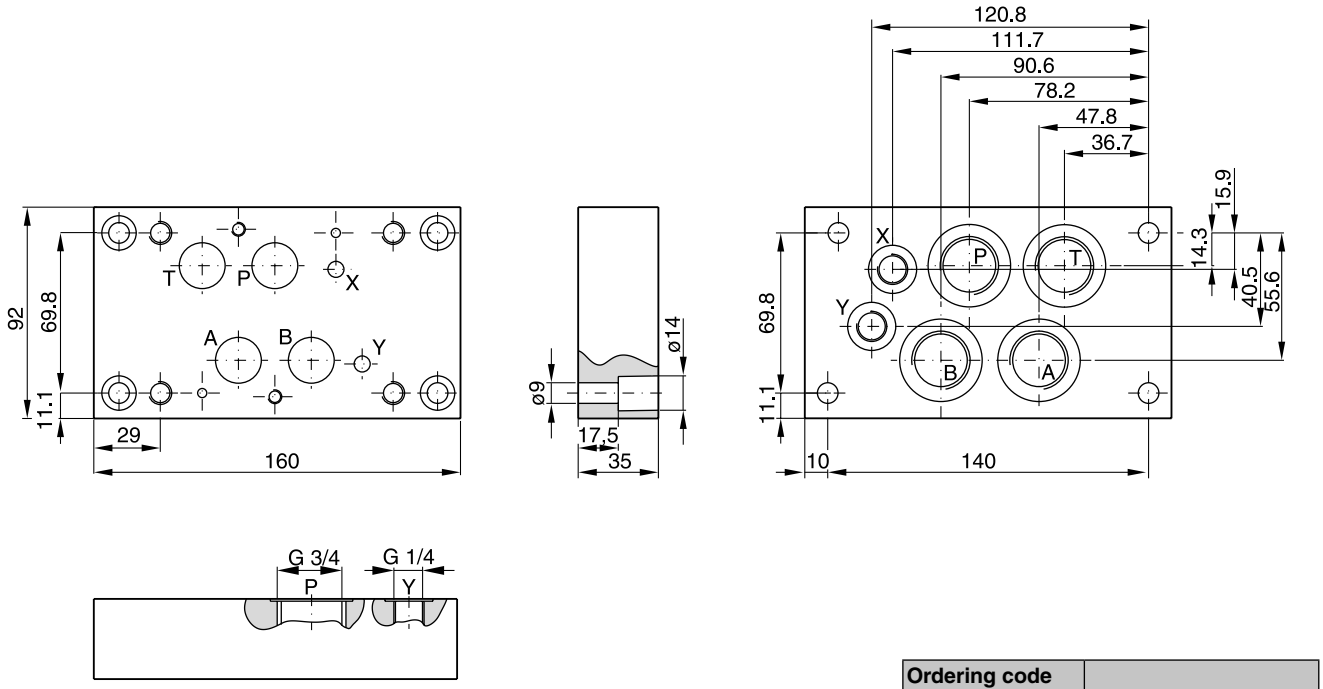

Ordering code	
SPD 46 B 910	P, A, B and T = G ¾ X and Y = G ¼

Valve size DIN NG16, CETOP 07, NFPA D07

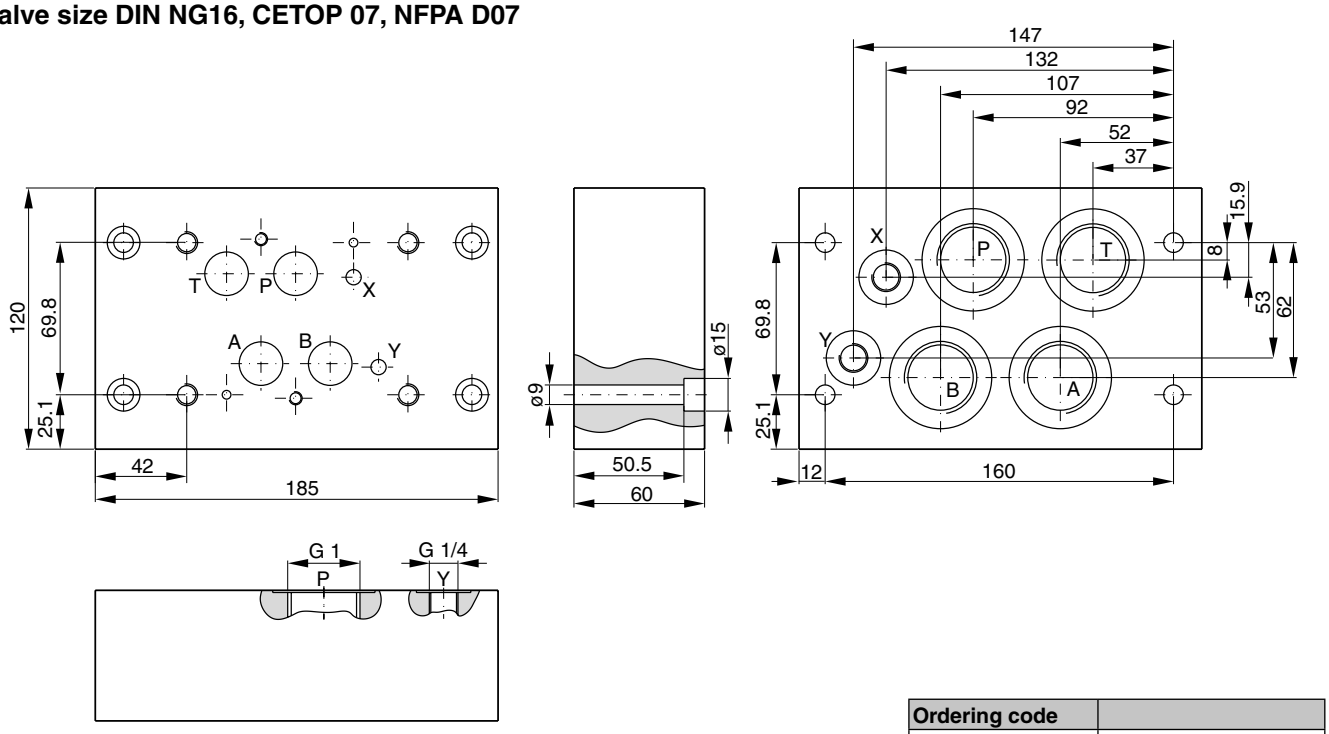

Ordering code	
SPD 48 B 910	P, A, B and T = G 1 X and Y = G ¼

Bold letters =
Short-term availability

Valve size DIN NG16, CETOP 07, NFPA D07

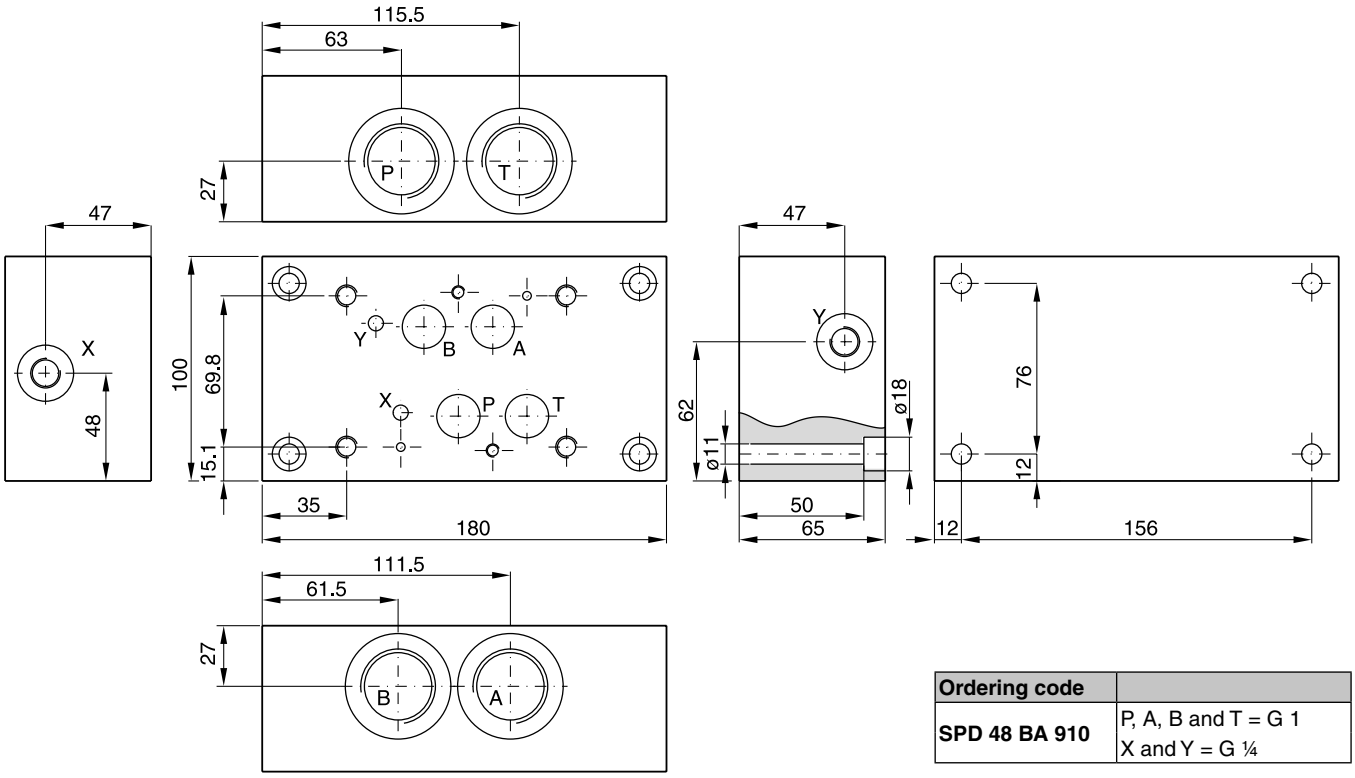

Ordering code	
SPD 48 BA 910	P, A, B and T = G 1 X and Y = G ¼

Valve size DIN NG25, CETOP 08, NFPA D08

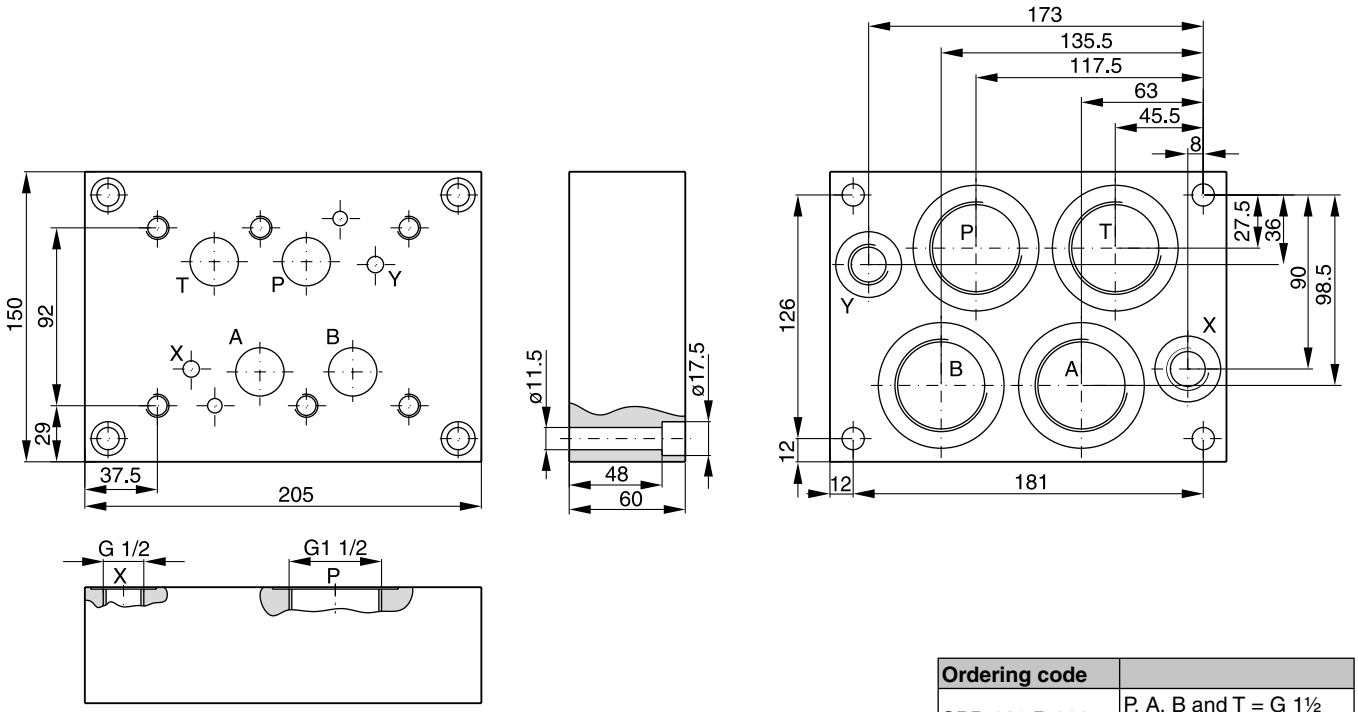

Ordering code	
SPD 612 B 930	P, A, B and T = G 1½ X and Y = G ½

Bold letters =
Short-term availability

12

Valve size DIN NG06, CETOP 03, NFPA D03

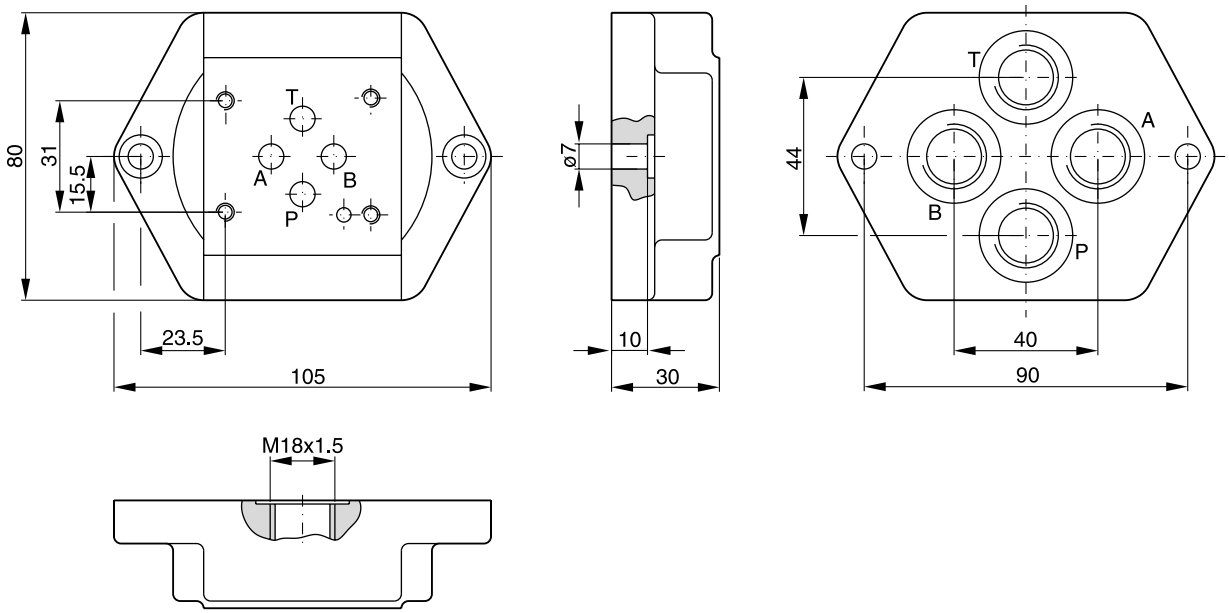

Order. code	
A 064 M	P, A, B and T = M18x1.5 as per ISO 6149

Valve size DIN NG10, CETOP 05, NFPA D05

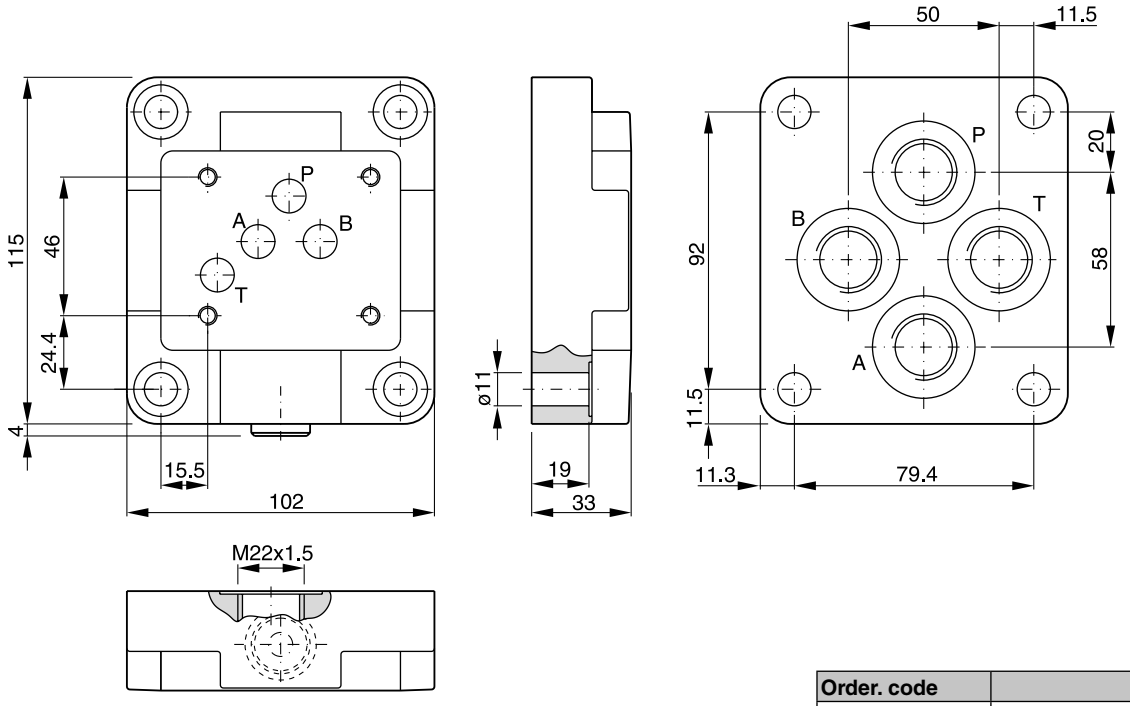

Order. code	
A 104 M	P, A, B and T = M22x1.5 as per ISO 6149

Bold letters =
Short-term availability

Valve size DIN NG10, ISO 6264-06-07-*-97, DIN 24340 form D / ISO 5781-06-07-0-00

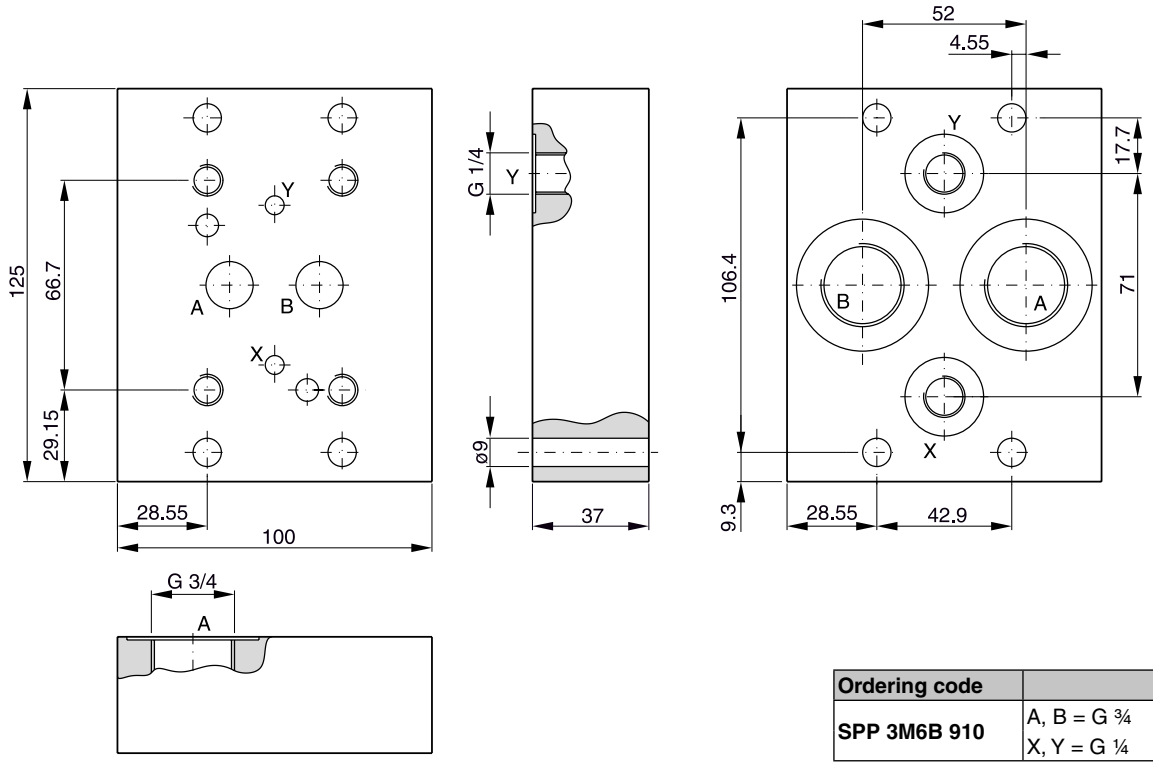

Ordering code	
SPP 3M6B 910	A, B = G ¾ X, Y = G ¼

Valve size DIN NG25, ISO 6264-08-11-*-97, DIN 24340 form D / ISO 5781-08-10-0-00

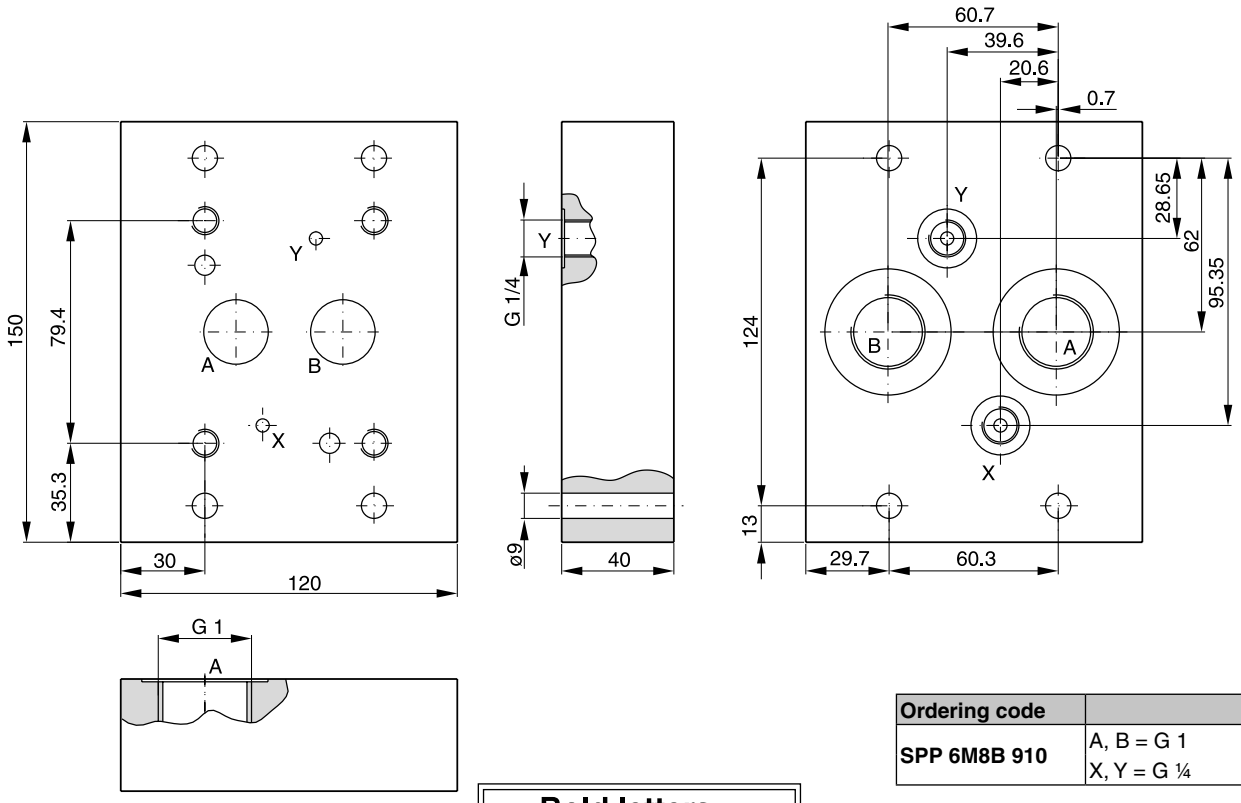

Ordering code	
SPP 6M8B 910	A, B = G 1 X, Y = G ¼

Bold letters =
Short-term availability

Valve size DIN NG32, ISO 6264-10-15-*-97, DIN 24340 form D / ISO 5781-10-13-0-00

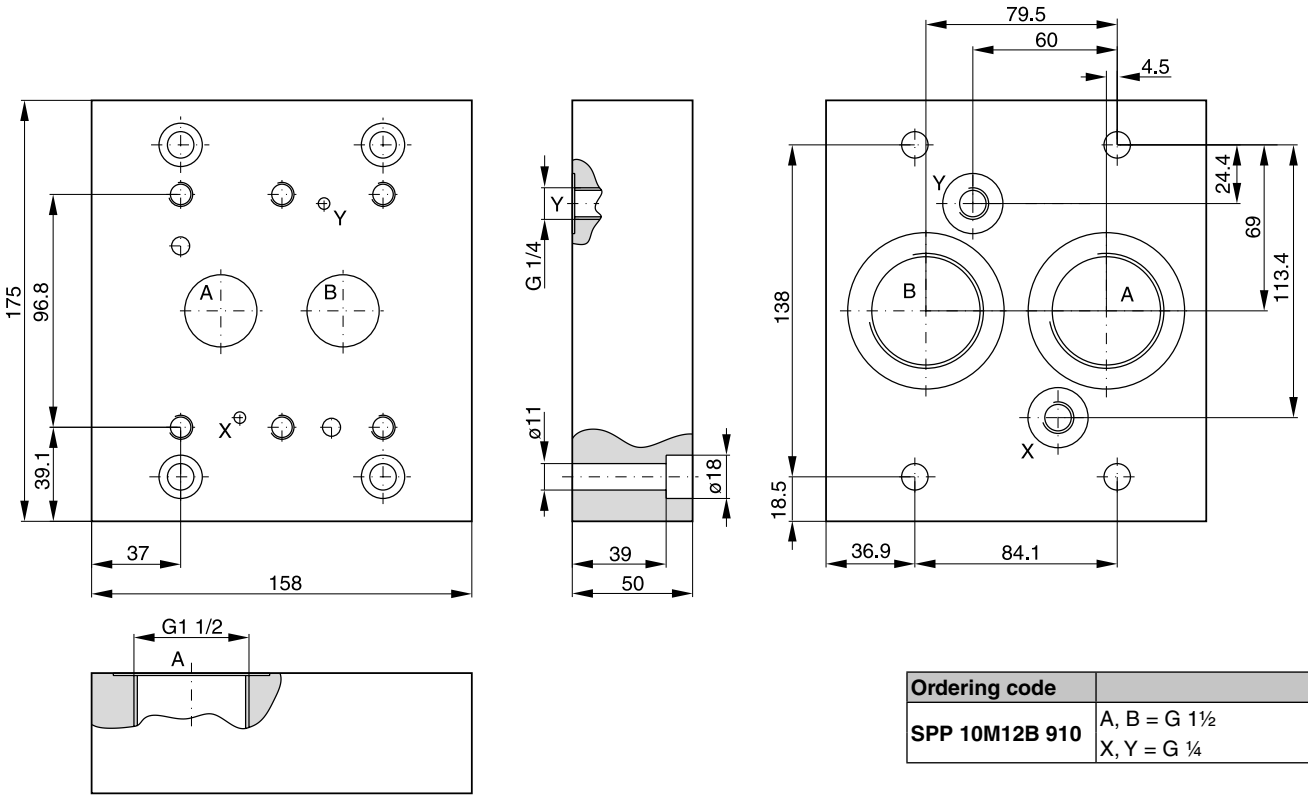

Ordering code	
SPP 10M12B 910	A, B = G 1½ X, Y = G ¼

Valve size DIN NG10, ISO 6264-06-09-*-97, DIN 24340 form E

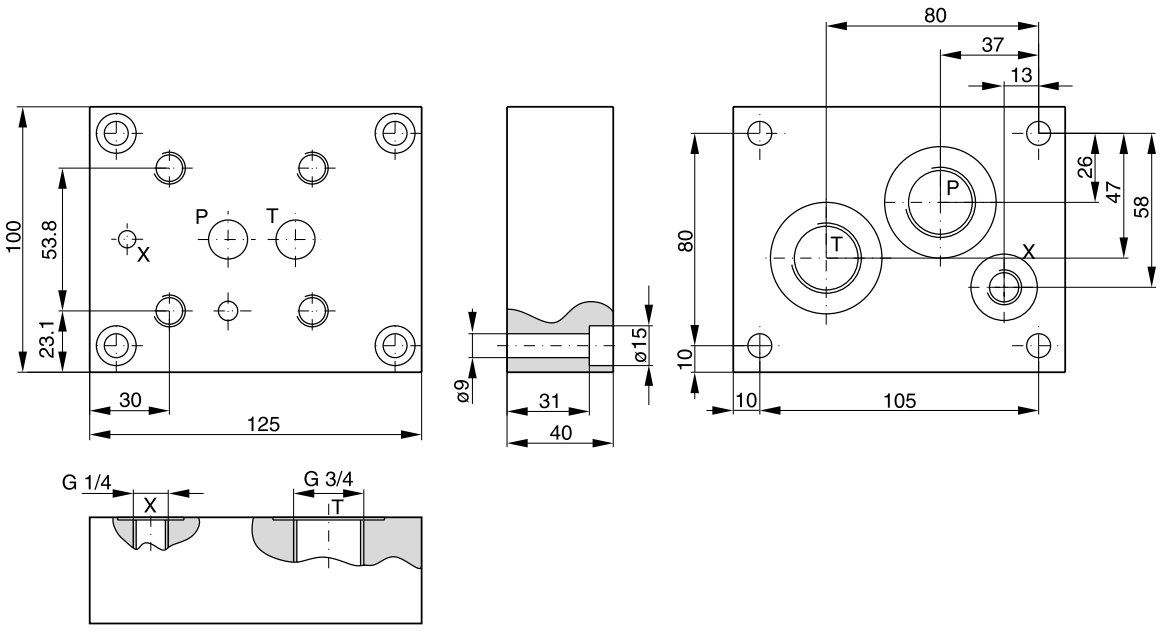

Ordering code	
SPP 3R6B 910	P, T = G ¾ X = G ¼

Bold letters =
Short-term availability

Valve size DIN NG25, ISO 6264-08-13-*-97, DIN 24340 form E

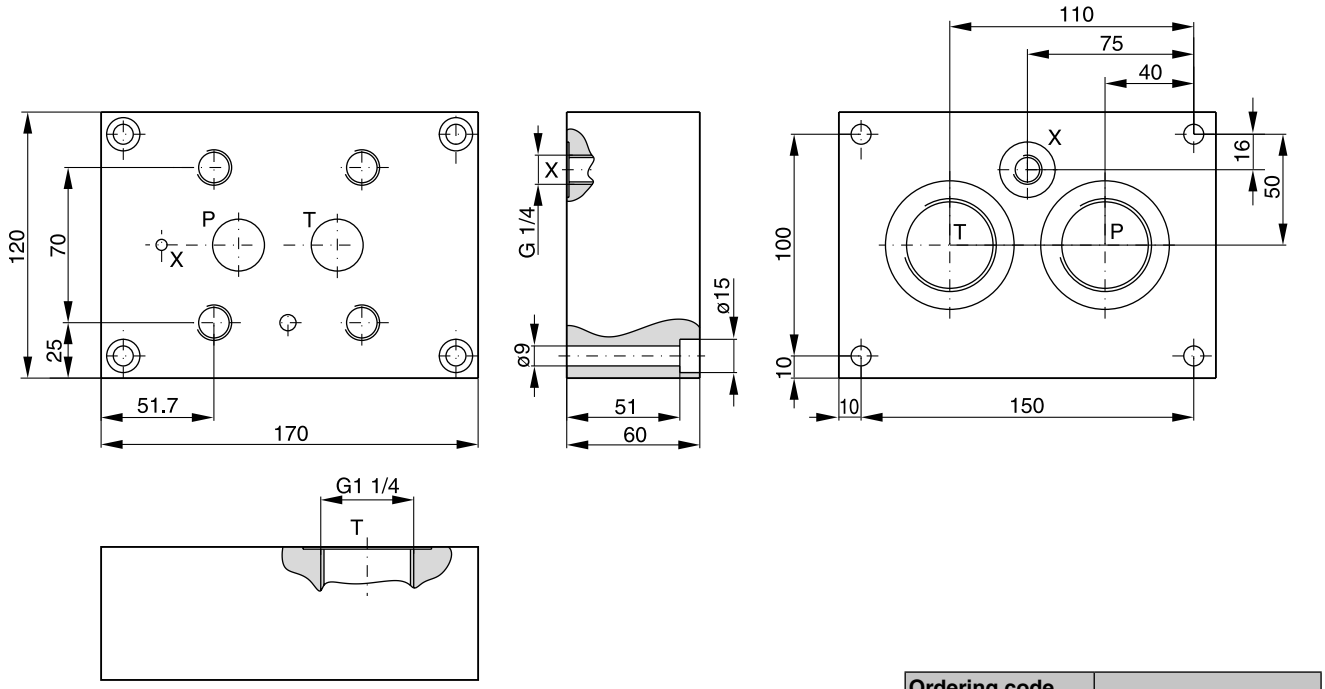

Ordering code	
SPP 6R10B 910	P, T = G 1¼ X = G ¼

Valve size DIN NG32, ISO 6264-10-17-*-97, DIN 24340 form E

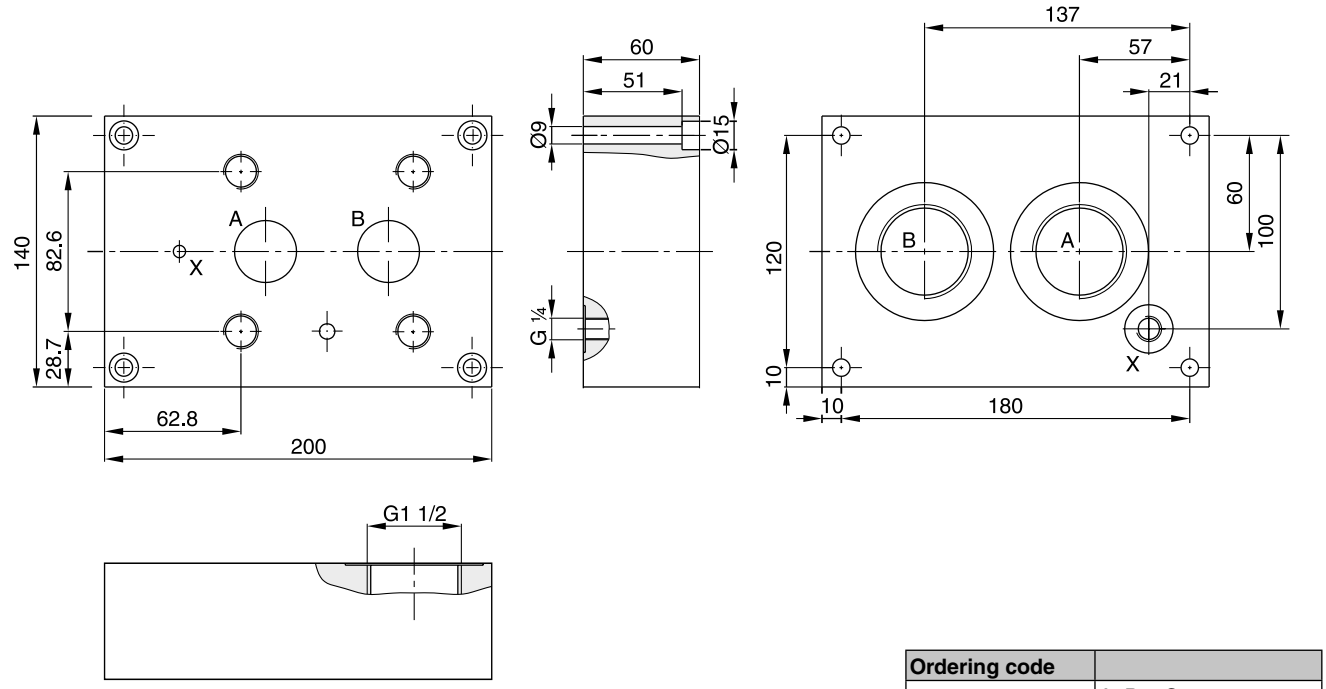

Ordering code	
SPP 10R12B 910	A, B = G 1½ X = G ¼

Bold letters =
Short-term availability

Valve size DIN NG10, for pressure valves VB and VM

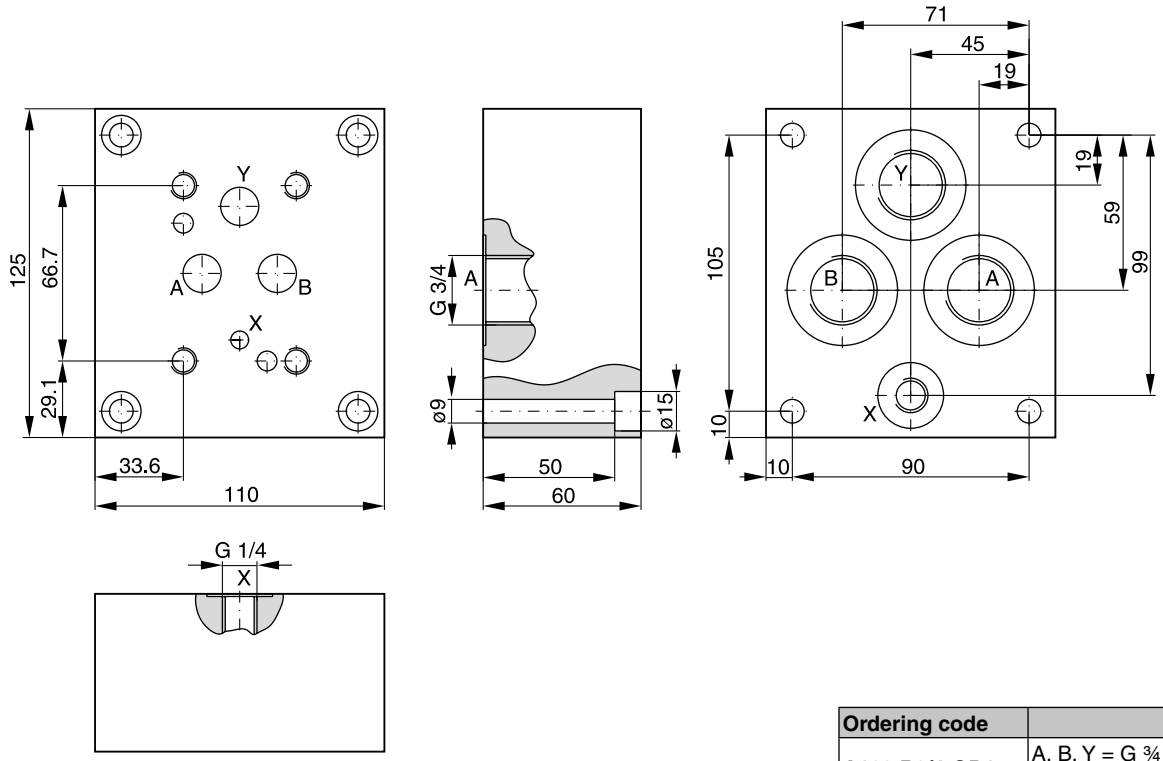

Ordering code	
A102 R3/4-OD1	A, B, Y = G ¾ X = ¼

Bold letters =
Short-term availability

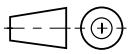

12

Multi-station manifolds are used to save space when connecting several directional control valves to a common pressure and return line.

Diverse switching arrangements are possible in combination with sandwich and directional control valves.

Features

- Very low pressure drop due to large drilling parameters.
- P- and T-ports on both faces.
- Also available with gauge ports G¼.



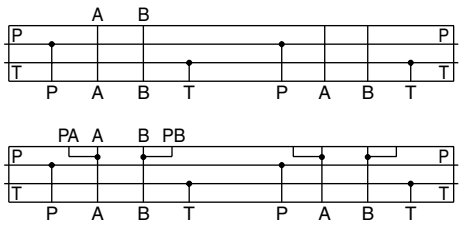

Ordering code

MSP	☐	☐	☐	B	☐	9	☐	☐
Multiple subplate, standard	Stations	Nominal size	Port size	BSPP Port thread	Port location	Metric fastening screws	Design series	Gauge port

Code	Stations
1	**1**
2	**2**
3	**3**
4	**4**
5	**5**
6[1)]	**6**
7[1)]	**7**
8[1)]	**8**

Code	Size
D2	**NG06 / CETOP 03**
D3	**NG10 / CETOP 05**

Code	Gauge port
omit	**without**
C[2)]	Port G¼

Code	Design series
10	**CETOP 03, NG06**
30	**CETOP 05, NG10**

Code	Port location
omit	**A + B rear**
A	**A + B side**

Code	Port size
3	**CETOP 03 A + B = G 3/8 P + T = G 1/2**
4	**CETOP 05 A + B = G 1/2 P = G 3/4 T = G1**

Bold letters =
Short-term availability

Technical data

Interface		DIN 24340, Form A, CETOP, ISO 4401
Mounting position		unrestricted (valve axis preferably horizontal)
Working pressure	[bar]	max. 350
Surface protection		phosphated (no permanent corrosion protection)

[1)] Not for NG10 with gauge ports

[2)] Not for NG10 with 6, 7, or 8 stations

MSP*D23 B910*

Multi-station manifold NG06 with rear ports A+B (gauge ports only with code "C")

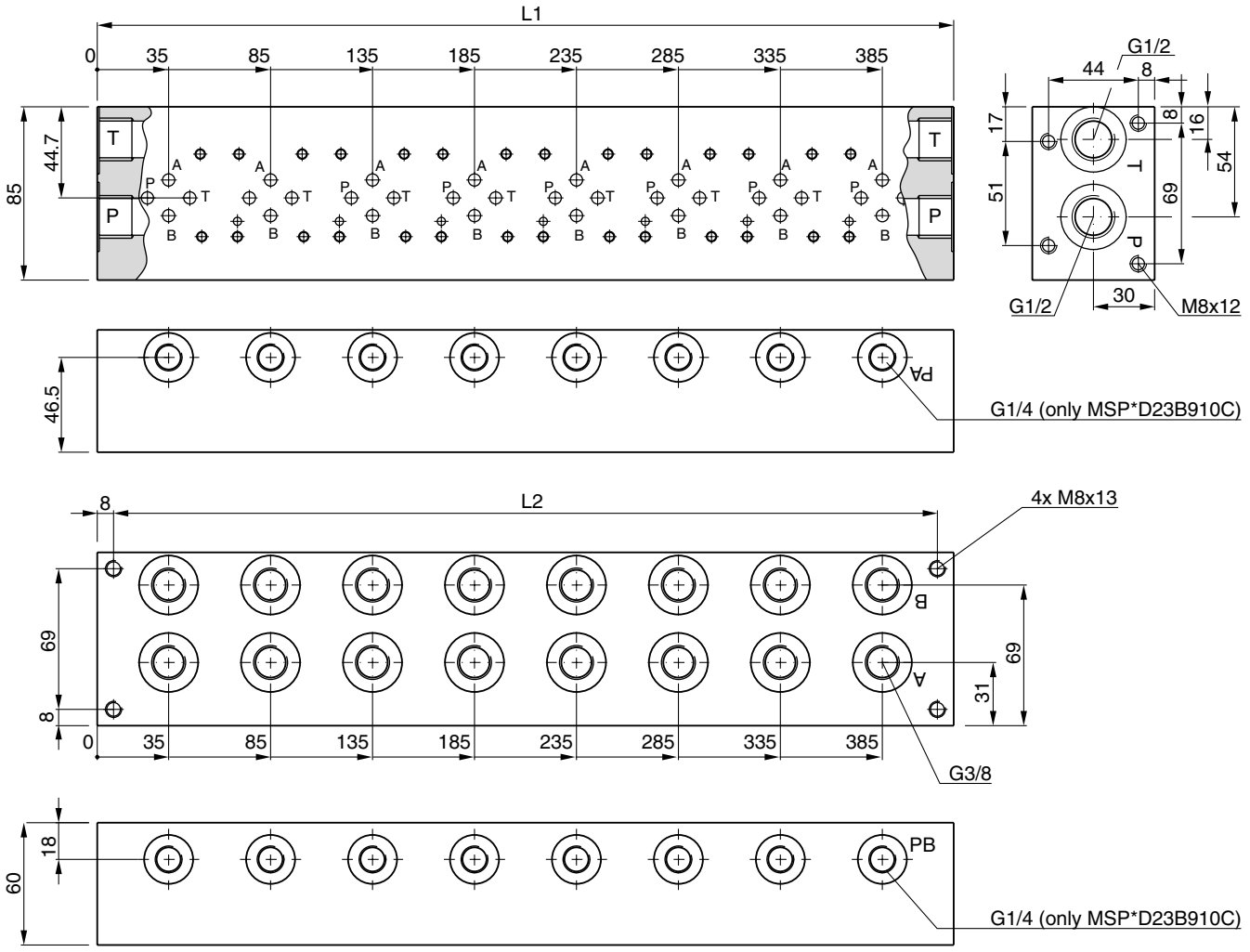

Code	Nominal size	Stations	L1 [mm]	L2 [mm]	Port		Gauge port	Weight [1] [kg]
					P,T	A, B		
MSP1 D23 B910*	NG06 CETOP 03	1	70	54	G½	G⅜	G¼ (only MSP*D23B910C)	2.1 (2.1)
MSP2 D23 B910*		2	120	104				3.7 (3.7)
MSP3 D23 B910*		3	170	154				5.4 (5.3)
MSP4 D23 B910*		4	220	204				6.9 (6.9)
MSP5 D23 B910*		5	270	254				8.6 (8.4)
MSP6 D23 B910*		6	320	304				10.3 (10.1)
MSP7 D23 B910*		7	370	354				11.9 (11.7)
MSP8 D23 B910*		8	420	404				13.5 (13.4)

[1] Values in ( ) for MSP*D23B910C

MSP UK.INDDM 17.04.19

MSP*D23 BA910
Multi-station manifold NG06 with side ports A+B

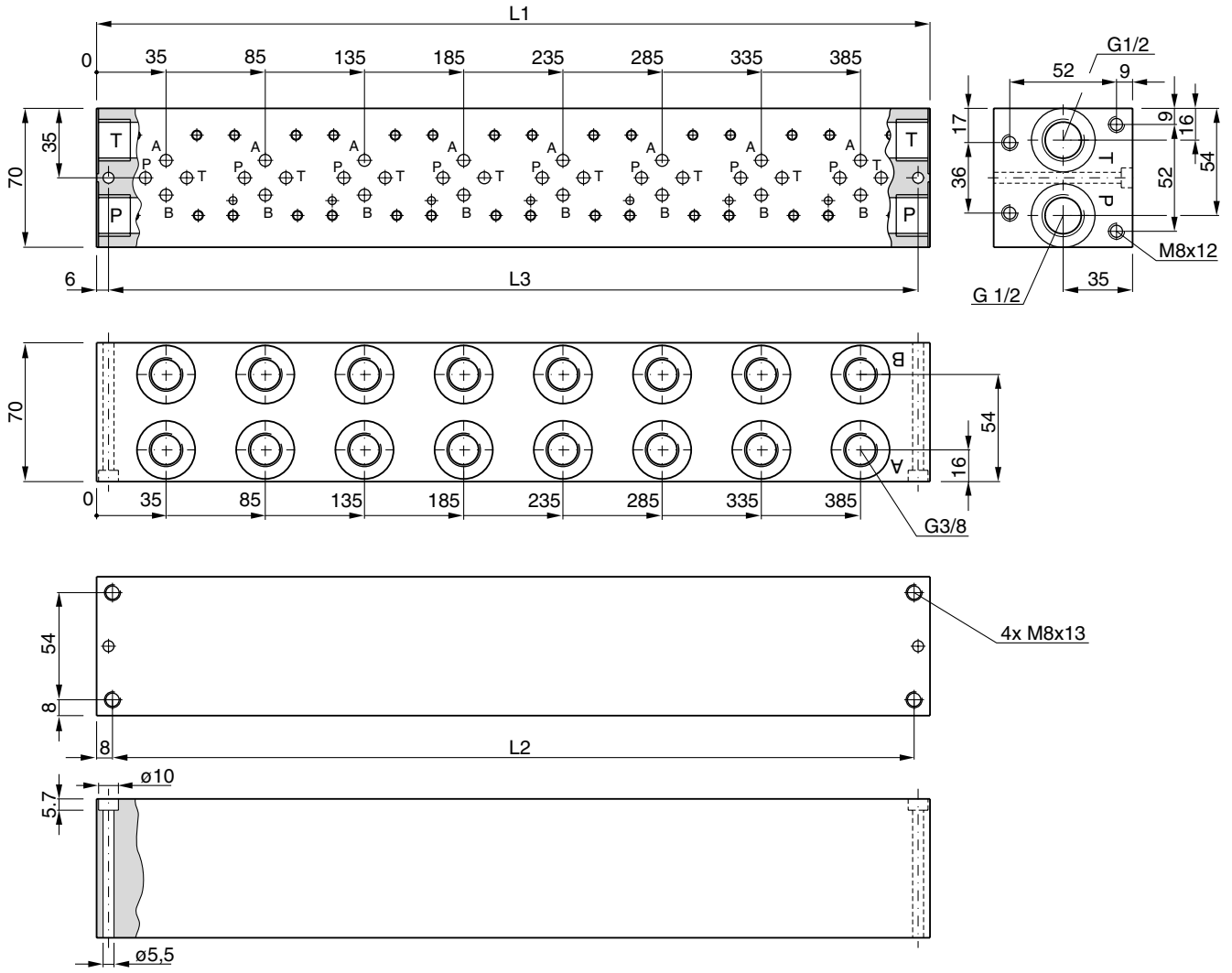

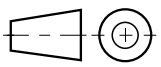

Code	Nominal size	Stations	L1 [mm]	L2 [mm]	L3 [mm]	Port		Gauge port	Weight [kg]
						P, T	A, B		
MSP1 D23 BA910	NG06 CETOP 03	1	70	54	58	G½	G⅜	—	2.0
MSP2 D23 BA910		2	120	104	108				3.5
MSP3 D23 BA910		3	170	154	158				5.0
MSP4 D23 BA910		4	220	204	208				6.6
MSP5 D23 BA910		5	270	254	258				8.1
MSP6 D23 BA910		6	320	304	308				9.6
MSP7 D23 BA910		7	370	354	358				11.2
MSP8 D23 BA910		8	420	404	408				12.7

MSP*D23 BA910C

Multi-station manifold NG06 with side ports A+B and gauge ports

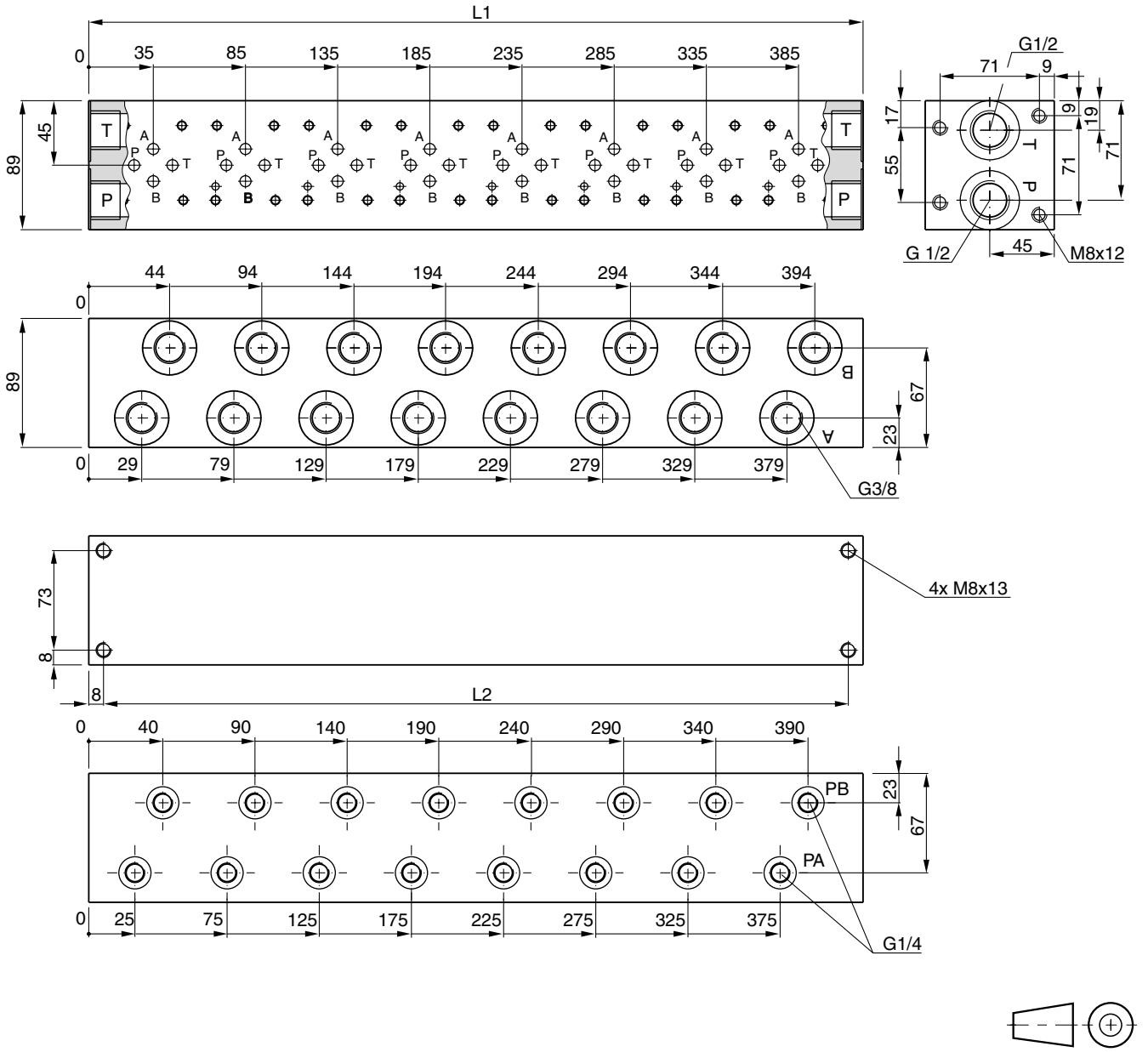

Code	Nominal size	Stations	L1 [mm]	L2 [mm]	Port		Gauge port	Weight [kg]
					P, T	A, B		
MSP1 D23 BA910C	NG06 CETOP 03	1	70	54	G½	G⅜	G¼	3.4
MSP2 D23 BA910C		2	120	104				5.8
MSP3 D23 BA910C		3	170	154				8.4
MSP4 D23 BA910C		4	220	204				10.6
MSP5 D23 BA910C		5	270	254				13.0
MSP6 D23 BA910C		6	320	304				15.7
MSP7 D23 BA910C		7	370	354				18.2
MSP8 D23 BA910C		8	420	404				20.6

MSP*D34 B930*

Multi-station manifold NG10 with rear ports A+B (gauge ports only with code "C")

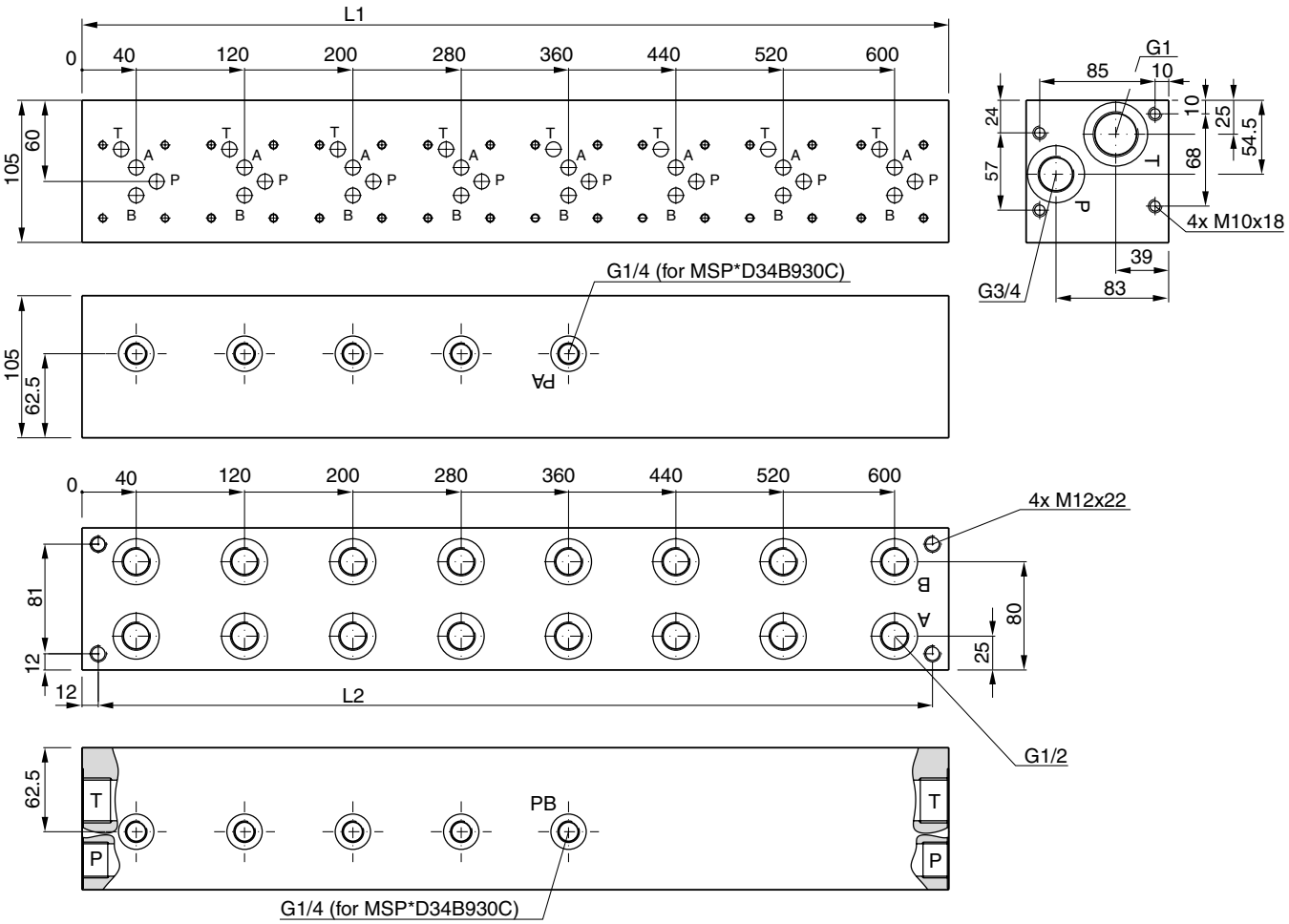

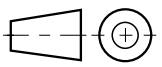

Code	Nominal size	Stations	L1 [mm]	L2 [mm]	Port			Gauge port	Weight [1] [kg]
					P	T	A, B		
MSP1 D34 B930*	NG10 CETOP 05	1	80	56	G¾	G1	G½	G¼ (only MSP*D34B930C)	5.2 (5.1)
MSP2 D34 B930*		2	160	136					10.7 (10.6)
MSP3 D34 B930*		3	240	216					16.2 (16.2)
MSP4 D34 B930*		4	320	296					21.6 (21.6)
MSP5 D34 B930*		5	400	376					27.2 (27.2)
MSP6 D34 B930		6	480	456				—	32.5
MSP7 D34 B930		7	560	536					38.0
MSP8 D34 B930		8	640	616					43.7

[1] Values in ( ) for MSP*D34B930C

MSP*D34 BA930
Multi-station manifold NG10 with side ports A+B

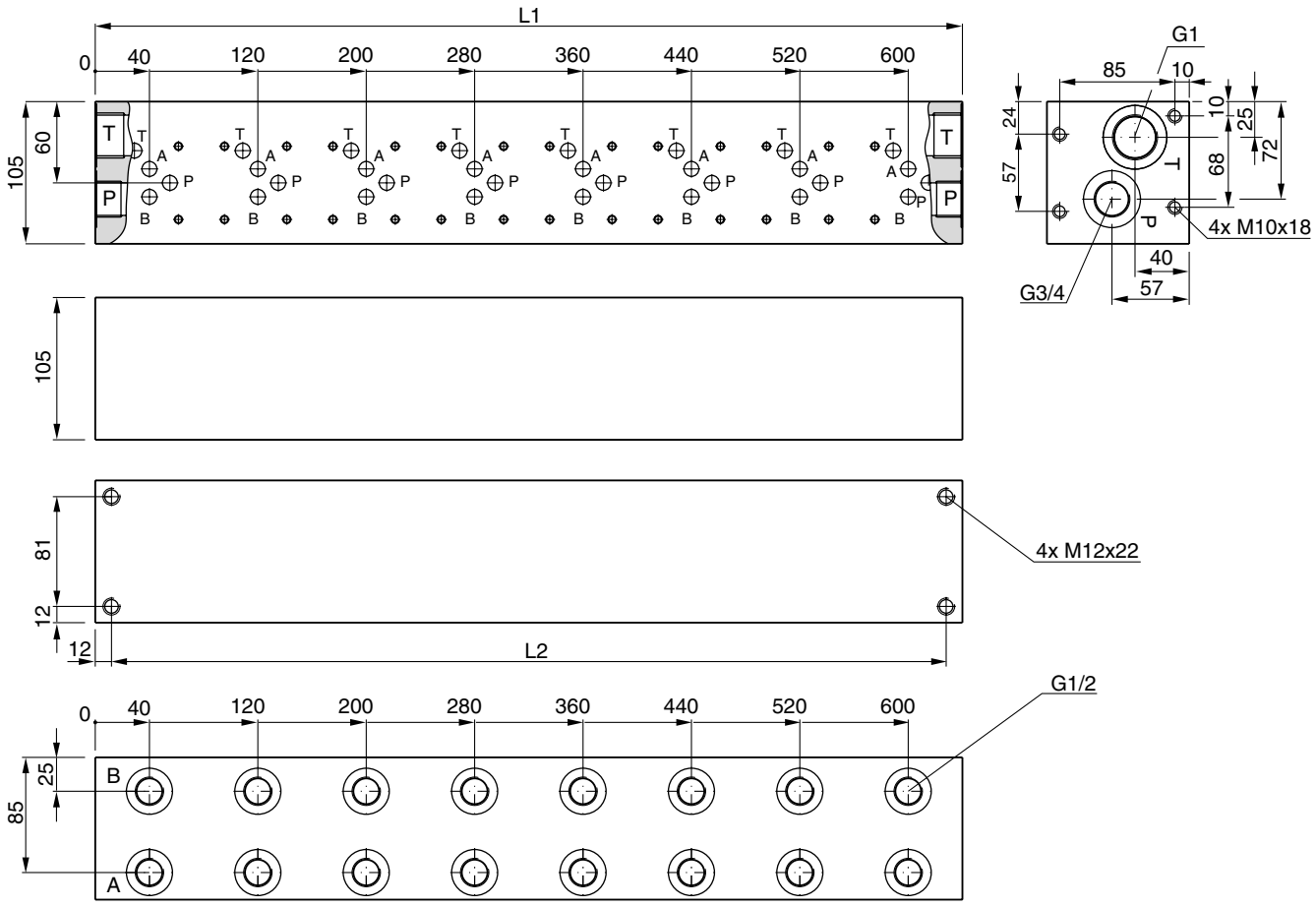

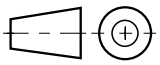

Code	Nominal size	Stations	L1 [mm]	L2 [mm]	Port			Gauge port	Weight [kg]
					P	T	A, B		
MSP1 D34 BA930	NG10 CETOP 05	1	80	56	G¾	G1	G½	—	5.1
MSP2 D34 BA930		2	160	136					10.6
MSP3 D34 BA930		3	240	216					16.0
MSP4 D34 BA930		4	320	296					21.5
MSP5 D34 BA930		5	400	376					26.9
MSP6 D34 BA930		6	480	456					32.5
MSP7 D34 BA930		7	560	536					37.7
MSP8 D34 BA930		8	640	616					43.4

MSP*D34 BA930C

Multi-station manifold NG10 with side connections A+B and gauge ports

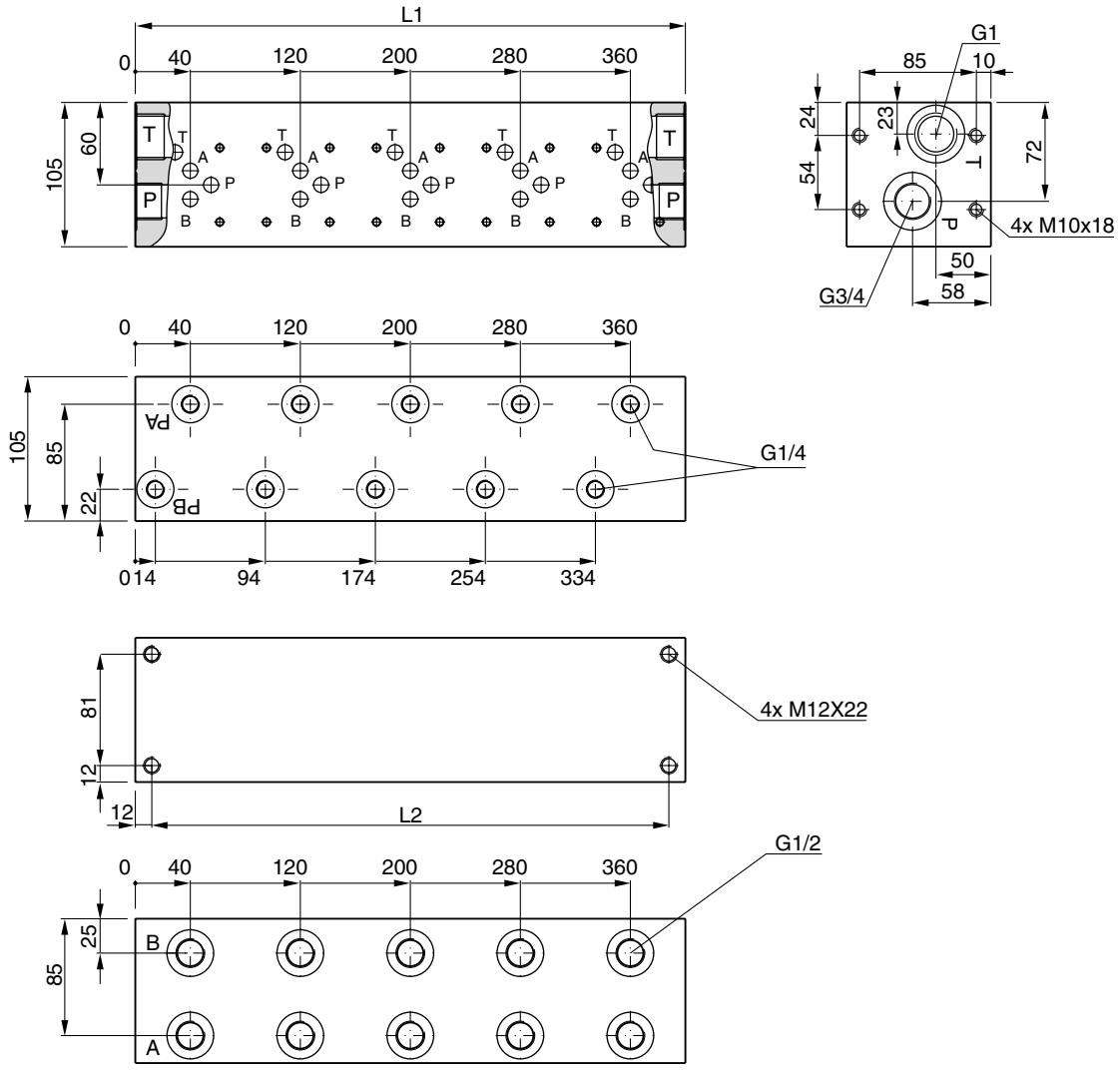

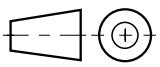

Code	Nominal size	Stations	L1 [mm]	L2 [mm]	Port			Gauge port	Weight [kg]
					P	T	A, B		
MSP1 D34 BA930C	NG10 CETOP 05	1	80	56	G¾	G1	G½	G¼	5.1
MSP2 D34 BA930C		2	160	136					10.4
MSP3 D34 BA930C		3	240	216					15.8
MSP4 D34 BA930C		4	320	296					21.2
MSP5 D34 BA930C		5	400	376					26.5

Symbol	Type	Size	Height
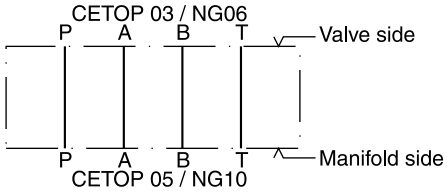	**PADA 1007-AA-BB**	NG10-NG06	25
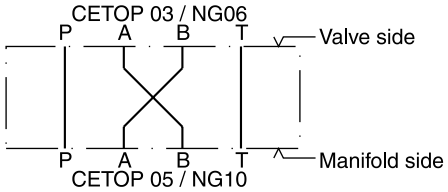	**PADA 1007/A-B/B-A**	NG10-NG06	25
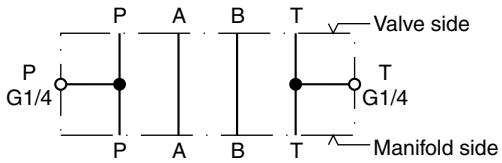	H06-1044	NG06	30
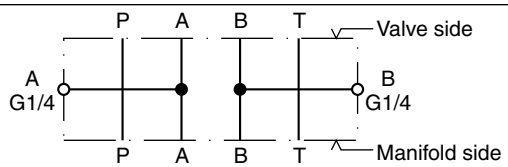	**H06-1039**	NG06	30
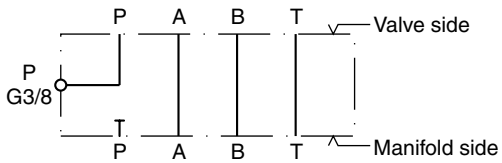	**H06-504**	NG06	30
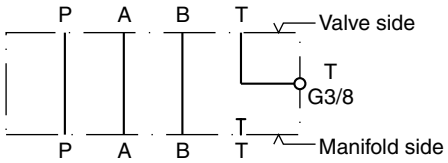	**H06-711**	NG06	30
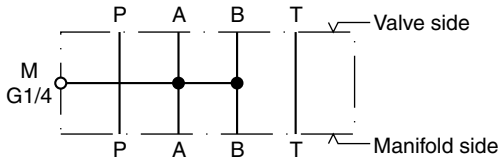	H06-1274	NG06	30
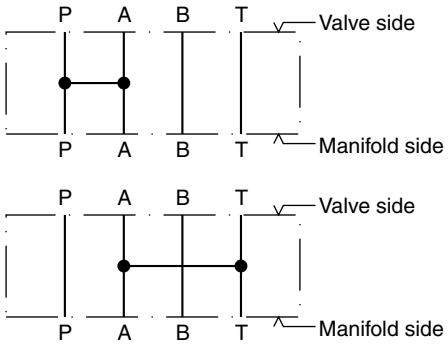	**H06-1040**	NG06	30

Bold letters =
Short-term availability

12

Symbol	Type	Size	Height
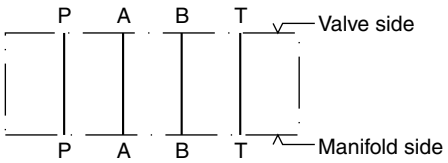	**H06DO-1291**	NG06	10
Code S 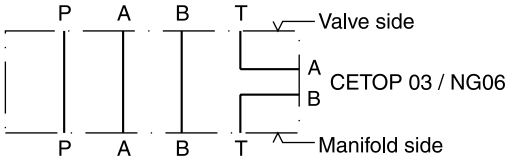 Code P 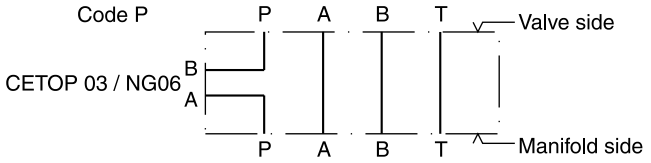	H06DU-814	NG06	71.3
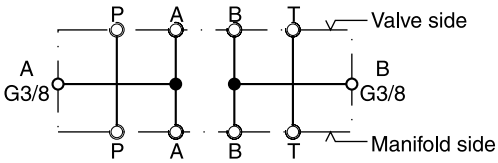 All ports can be equipped with orifices or plugs (1/16NPT)	CS06040N	NG06	40.3
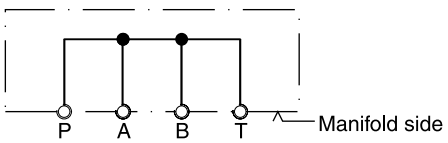 All ports can be equipped with orifices or plugs (1/16NPT)	CS06082N	NG06	40.3
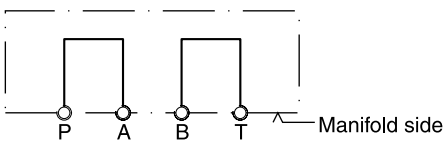 All ports can be equipped with orifices or plugs (1/16NPT)	CS06080N	NG06	40.3
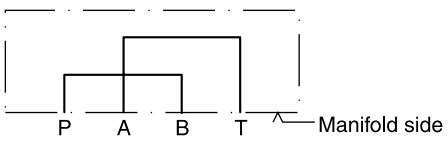	**D51DC071D**	NG06	26.3
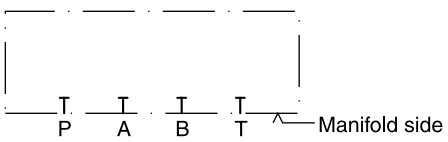	**D51VP071C** **D51VP101D**	NG06 NG10	26.3 26.9

12

Bold letters =
Short-term availability

Adaptor plate PADA 1007-AA-BB, CETOP 05/03, nominal size NG10 to NG06

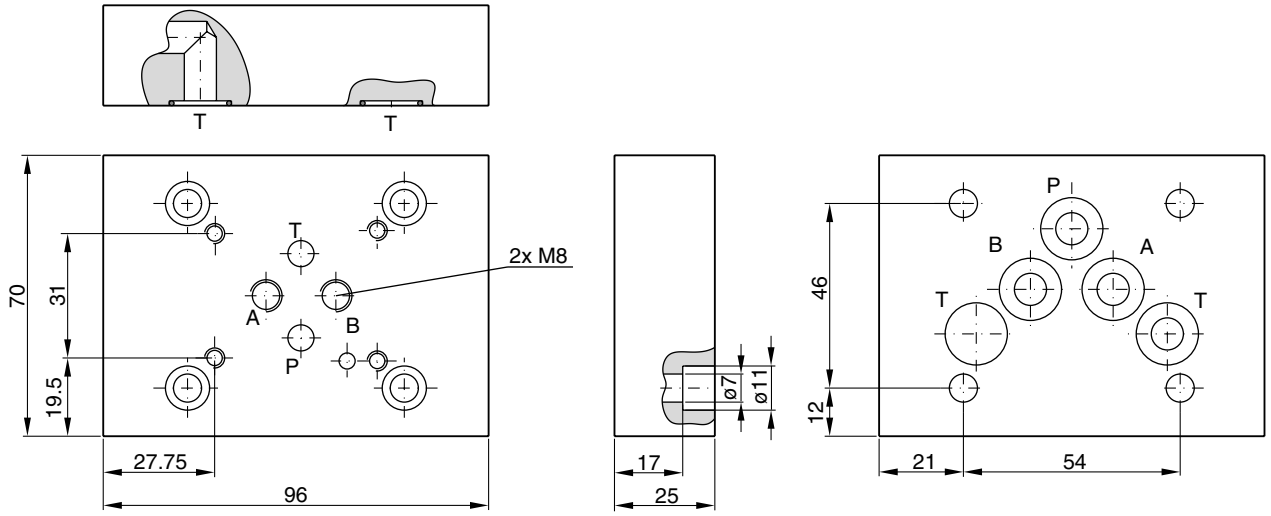

Symbol	Ordering code	Bolt kit	Bolt dimensions	Torque
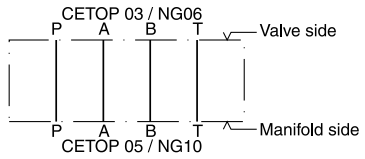	**PADA1007-AA-BB** CETOP 03/05 (O-rings included in delivery)	BK 408	4x M6x25 ISO 4762-12.9	13.2 Nm ±15 %

Adaptor plate PADA 1007/A-B/B-A, CETOP 03/05, nominal size NG10 to NG06

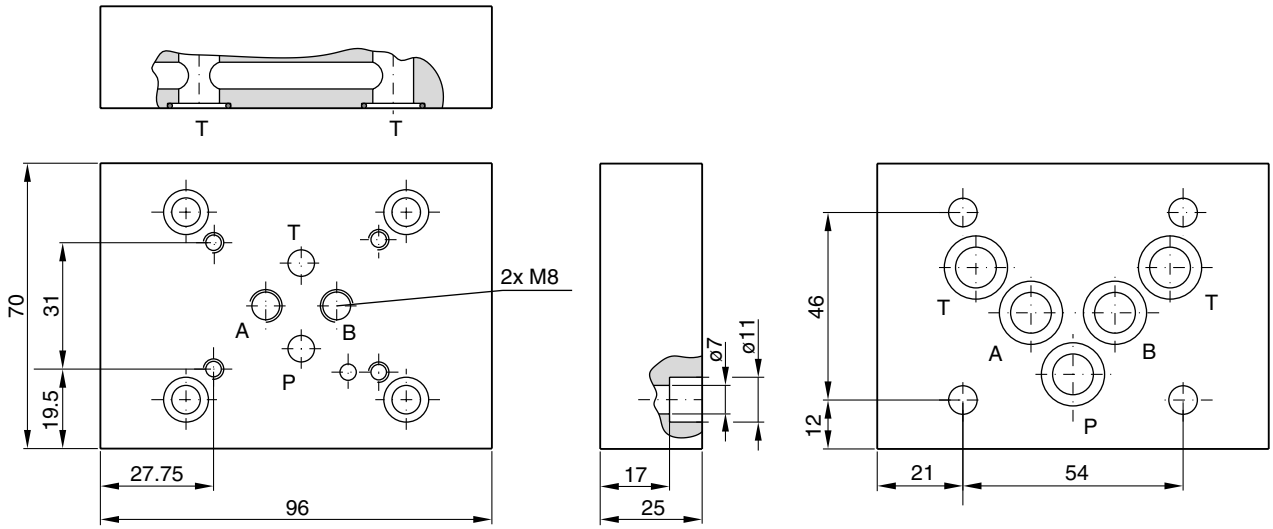

Symbol	Ordering code	Bolt kit	Bolt dimensions	Torque
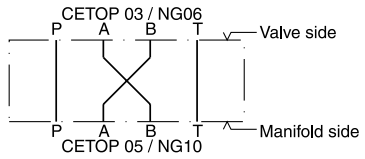	**PADA1007/A-B/B-A** CETOP 03/05 (O-rings included in delivery)	BK 408	4x M6x25 ISO 4762-12.9	13.2 Nm ±15 %

Bold letters =
Short-term availability

Sandwich plate H06-1044, CETOP 03 / NG06

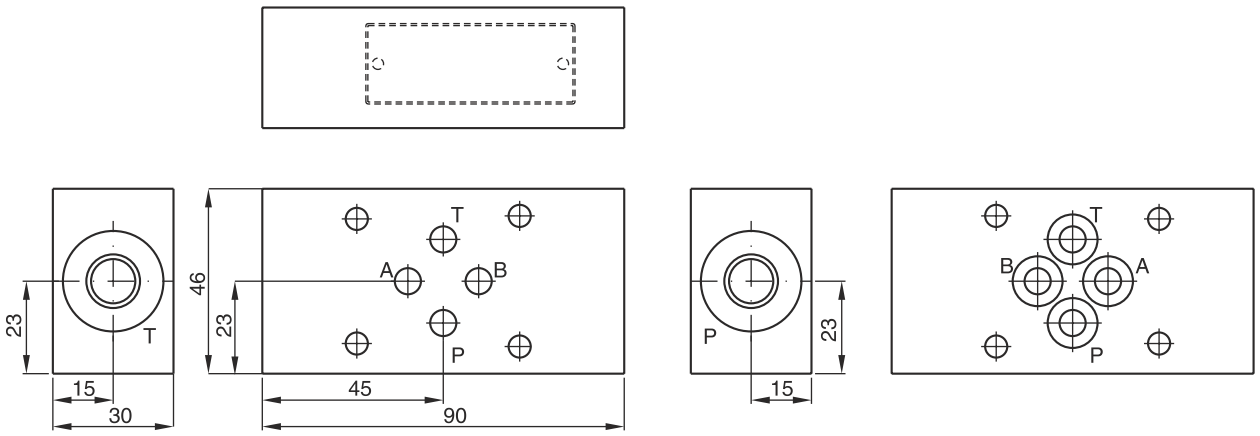

Symbol	Ordering code
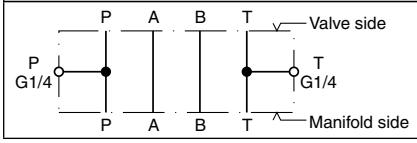	**H06-1044** CETOP 03 (O-rings included in delivery)

Sandwich plate H06-1039, CETOP 03 / NG06

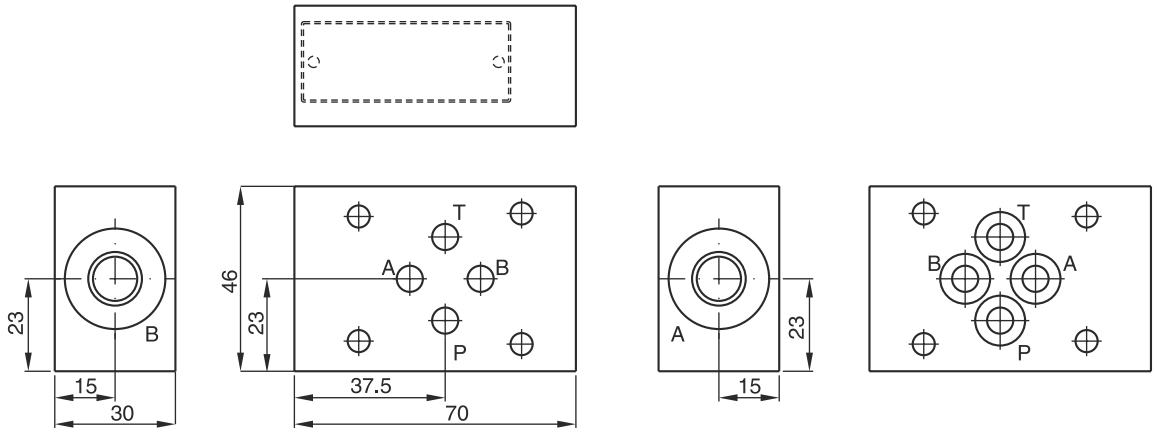

Symbol	Ordering code
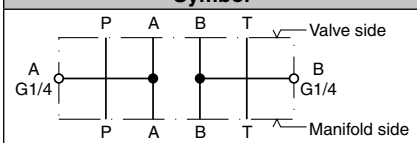	**H06-1039** CETOP 03 (O-rings included in delivery)

12

Sandwich plate H06-504, CETOP 03 / NG06

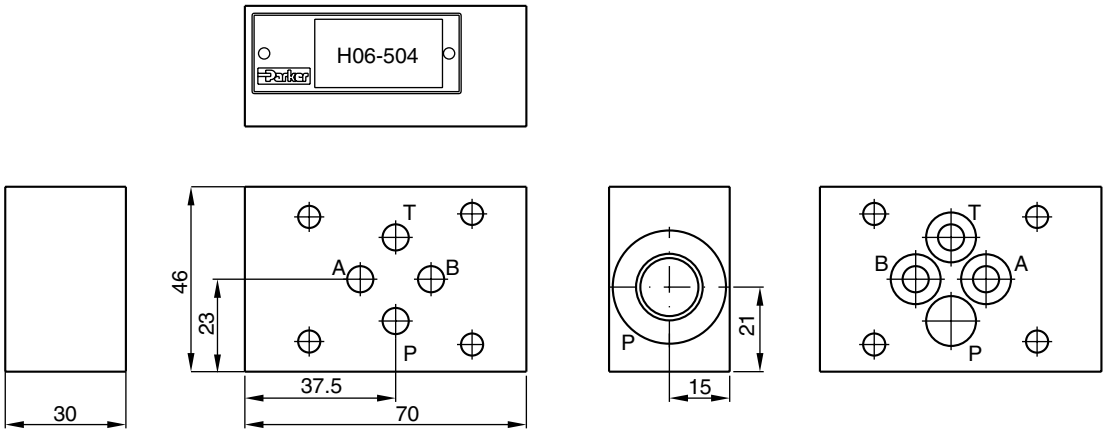

Symbol	Ordering code
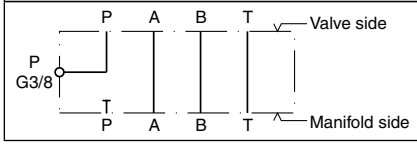	**H06-504** CETOP 03 (O-rings included in delivery)

Sandwich plate H06-711, CETOP 03 / NG06

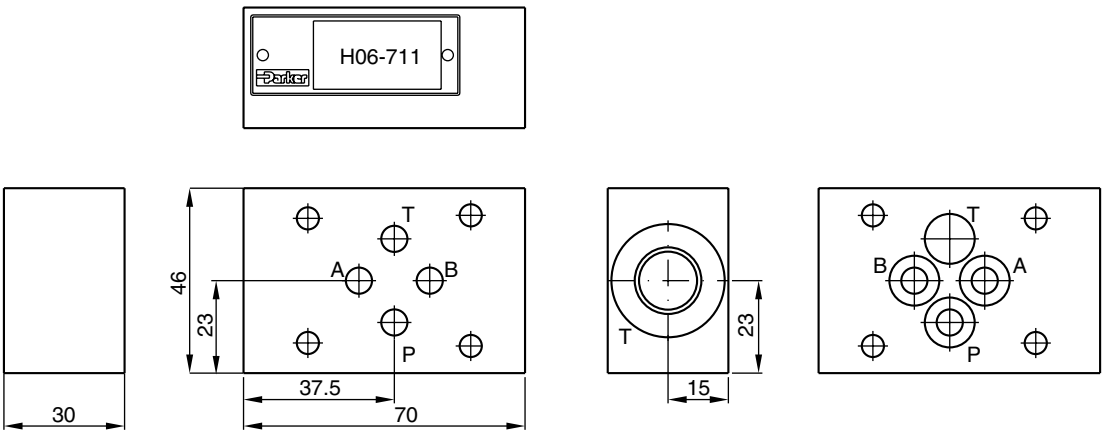

Symbol	Ordering code
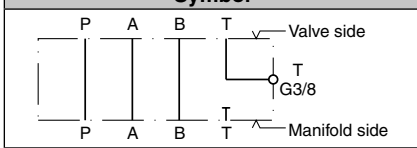	**H06-711** CETOP 03 (O-rings included in delivery)

12

Sandwich plate H06-1274, CETOP 03 / NG06

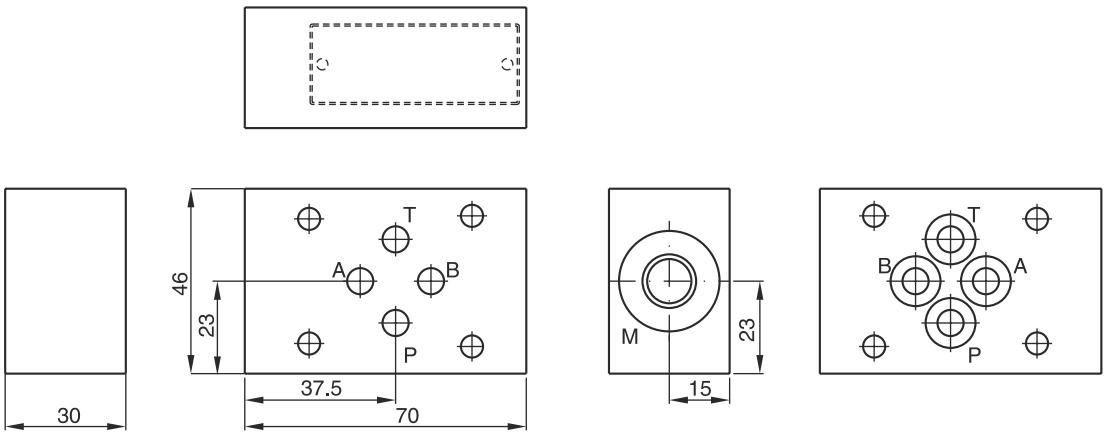

Symbol	Ordering code
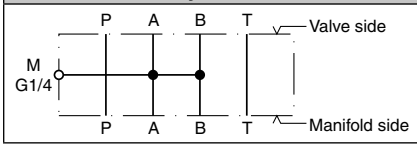	**H06-1274** CETOP 03 (O-rings included in delivery)

Sandwich plate H06-1040, CETOP 03 / NG06

The functional change is achieved by rotating the mounting position of the valve 180°.

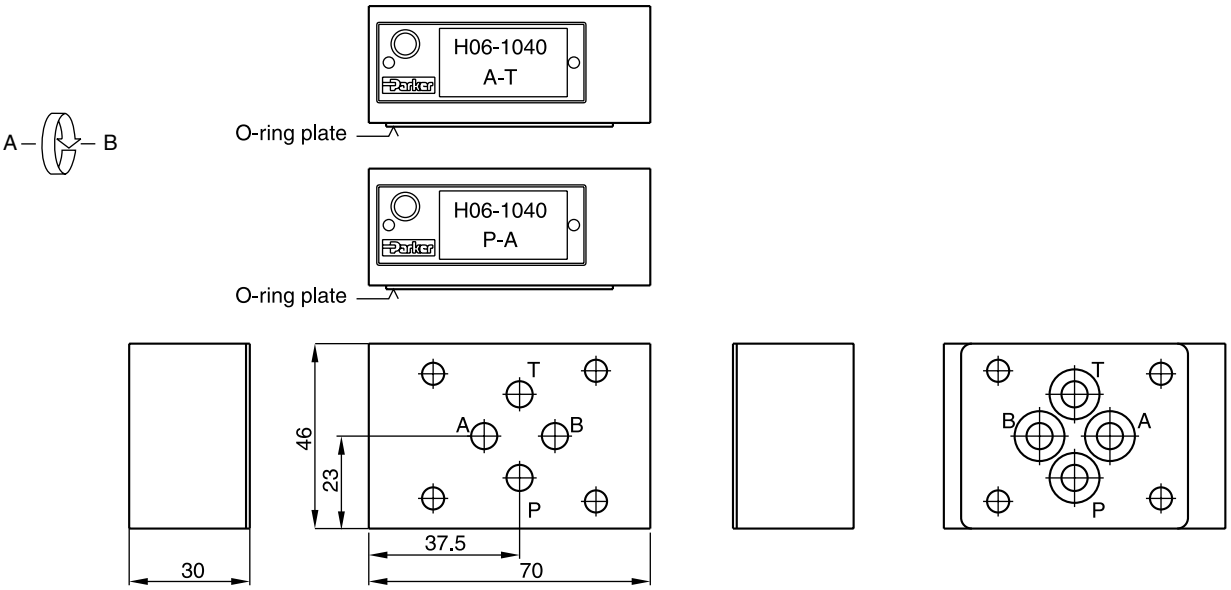

Symbol	Ordering code
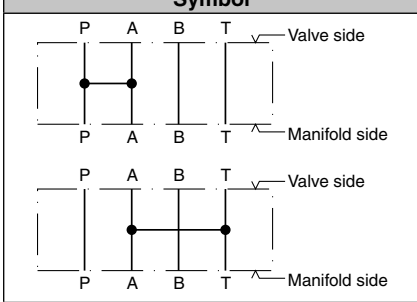	**H06-1040** CETOP 03 (O-rings and O-ring plate included in delivery)

12

Sandwich plate H06DO-1291, CETOP 03 / NG06

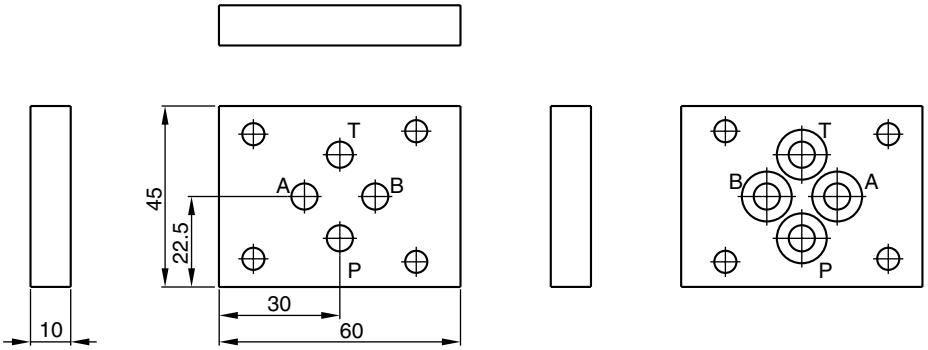

Symbol	Ordering code
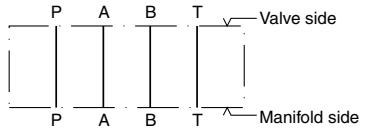	**H06DO-1291** CETOP 03 (O-rings included in delivery)

Sandwich plate H06DU-814, CETOP 03 / NG06

To mount a flow control valve GFG for meter-in (code P) or meter-out (code S) control.

The functional change is achieved by rotating the mounting position of the valve 180°.

For use as secondary control please observe the permitted tank pressure.

Ordering code
H06DU-814 CETOP 03 (O-rings and O-ring plate included in delivery)

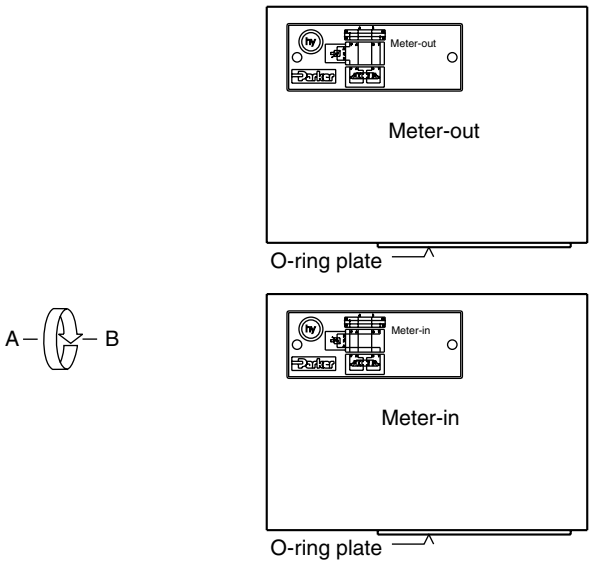

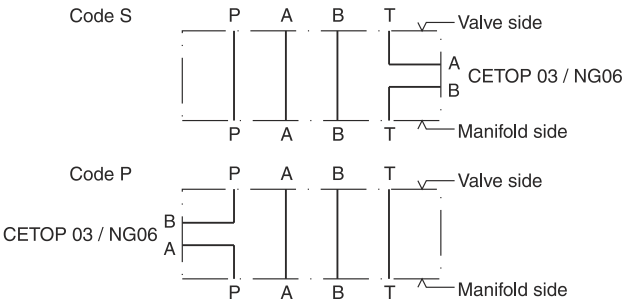

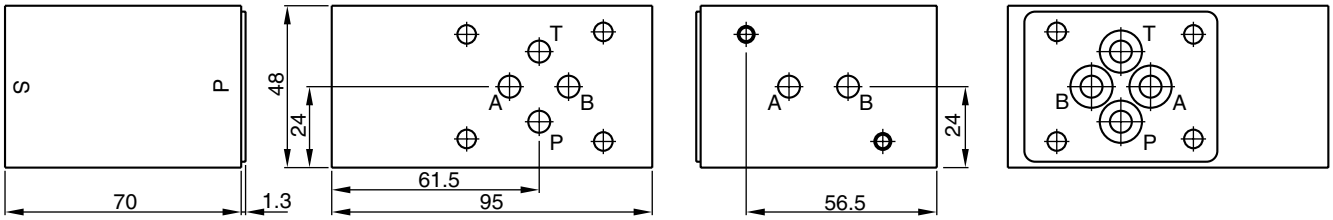

12

Sandwich plate CS06040N, CETOP 03 / NG06

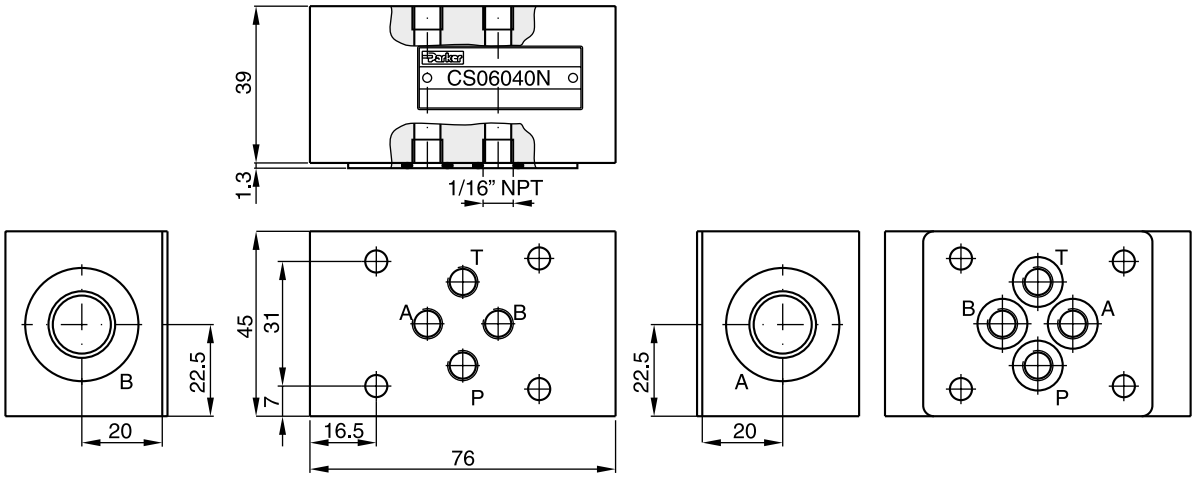

All ports on valve side and manifold side can be equipped with orifices or plugs (1/16 NPT).
For orifice kits see "Accessories" in chapter 8.

Symbol	Ordering code
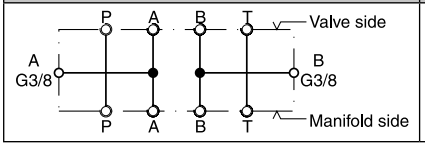	**CS06040N** CETOP 03 (O-rings and O-ring plate included in delivery)

Cover plate CS06082N, CETOP 03 / NG06

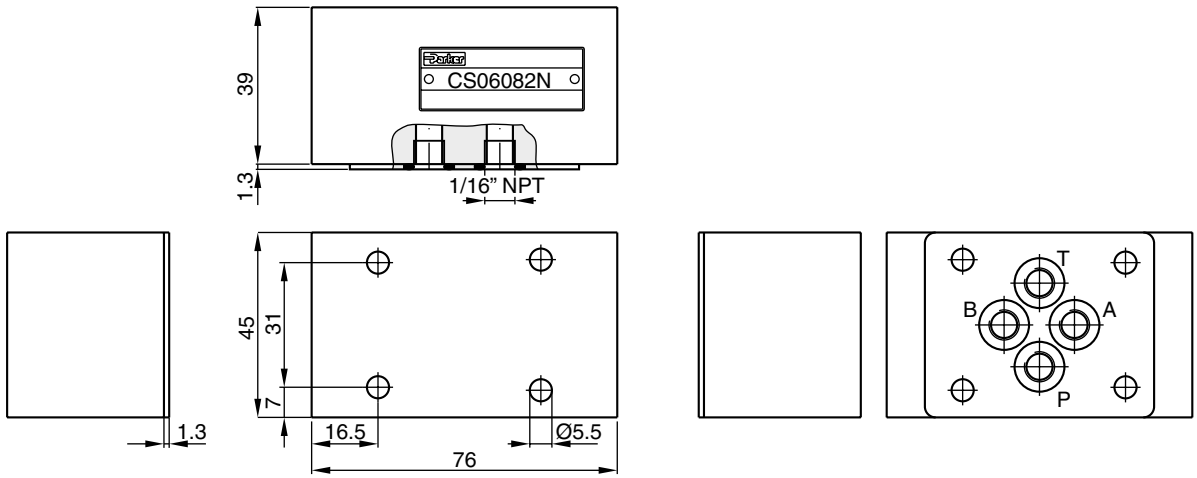

All ports on manifold side can be equipped with orifices or plugs (1/16 NPT).
For orifice kits see "Accessories" in chapter 8.

Symbol	Ordering code	Bolt Kit	Bolt dimensions	Torque
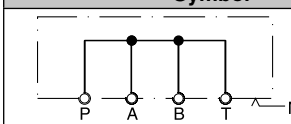	**CS06082N** CETOP 03 (O-rings and O-ring plate included in delivery)	BK 300	4x M5x50 ISO 4762-12.9	7.6 Nm ±15 %

12

Cover plate CS06080N, CETOP 03 / NG06

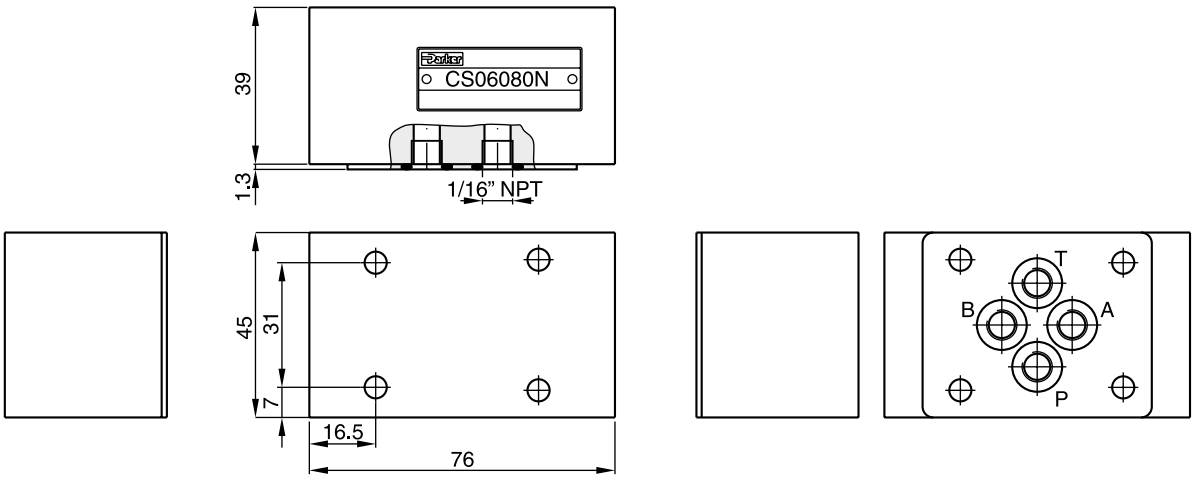

All ports on manifold side can be equipped with orifices or plugs ($^{1}/_{16}$ NPT).
For orifice kits see "Accessories" in chapter 8.

Symbol	Ordering code	Bolt Kit	Bolt dimensions	Torque
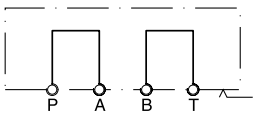	**CS06080N** CETOP 03 (O-rings and O-ring plate included in delivery)	BK 300	4x M5x50 ISO 4762-12.9	7.6 Nm ±15 %

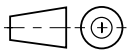

12

Cover plate D51DC071D, CETOP 03 / NG06

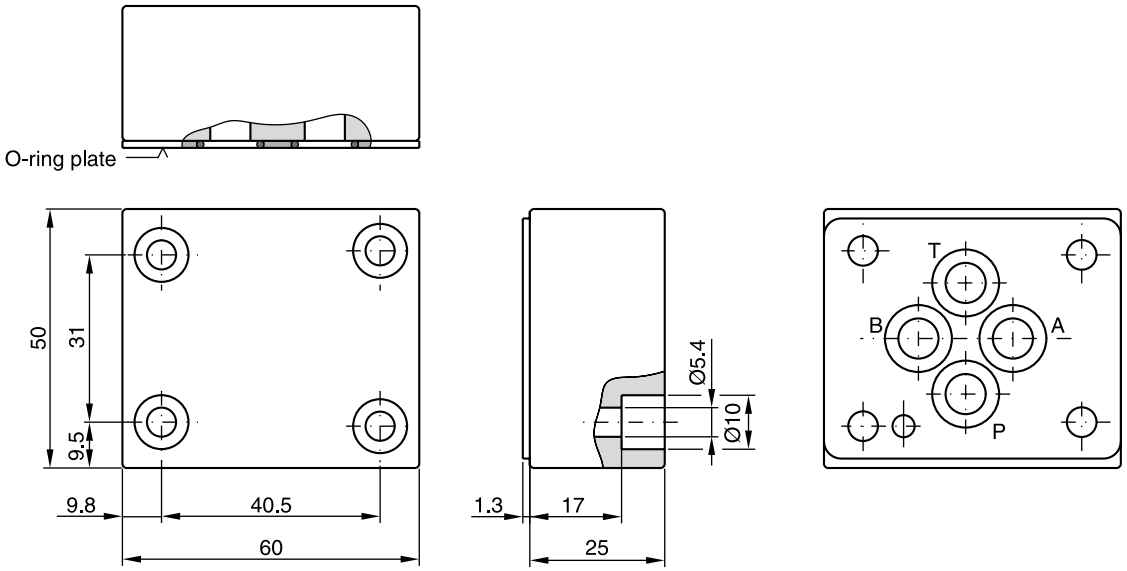

Symbol	Ordering code	Bolt Kit	Bolt dimensions	Torque
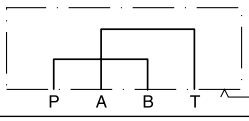	**D51DC071D** CETOP 03 (O-rings and O-ring plate included in delivery)	BK 399	M5x25 ISO 4762-12.9	7.6 Nm ±15 %

Cover plate D51VP071C, CETOP 03 / NG06

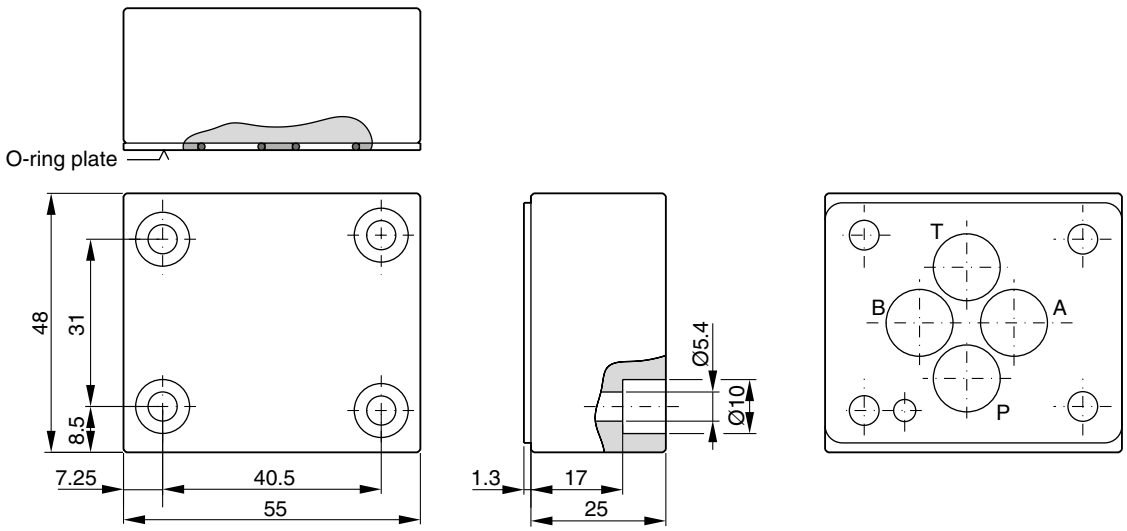

Symbol	Ordering code	Bolt Kit	Bolt dimensions	Torque
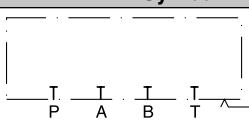	**D51VP071C** CETOP 03 (O-rings and O-ring plate included in delivery)	BK 399	M5x25 ISO 4762-12.9	7.6 Nm ±15 %

12

Cover plate D51VP101D, CETOP 05 / NG10

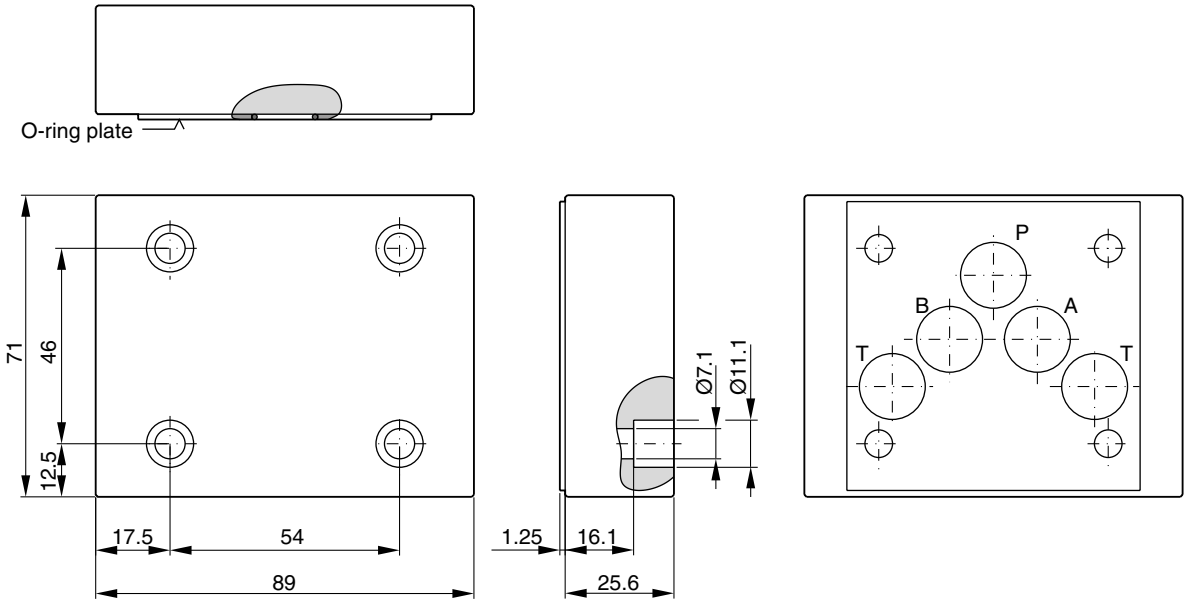

Symbol	Ordering code	Bolt Kit	Bolt dimensions	Torque
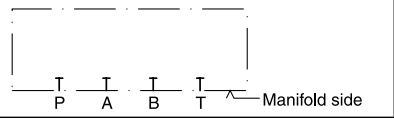	**D51VP101D** CETOP 05 (O-rings and O-ring plate included in delivery)	BK 408	4x M6x25 ISO 4762-12.9	13.2 Nm ±15 %

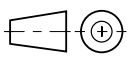

12

Cartridge manifold blocks are bodies for 2/2-way slip-in cartridge valves. They are used in systems with only one cartridge valve without the need to design a specific manifold block.

The pilot ports X and Y can either be connected to A and B or vice versa by changing the mounting position of the cartridge cover.

The wide range of Parker slip-in cartridge valves allows to design solutions for all hydraulic requirements.

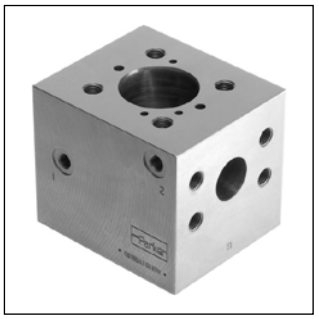

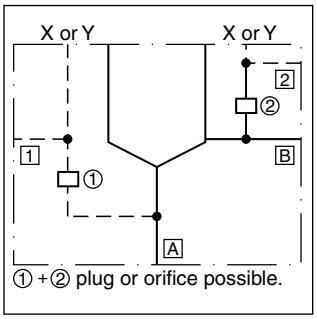

Features

- Flanges SAE62 respectively CETOP square flange
- 2 options for pilot oil supply and drain
- 6 sizes

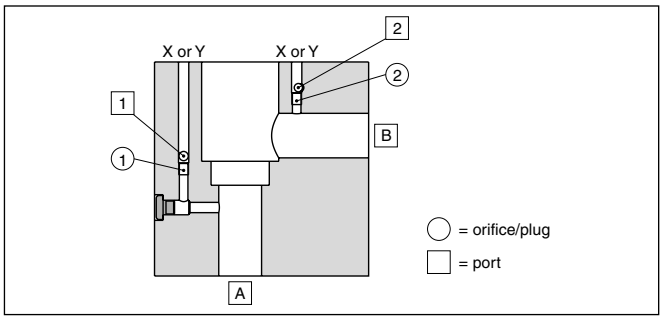

Ordering code

CB		A	1		10	W
Cartridge manifold block	Nominal size	Function In - Out	Manifold for 1 cartridge	Flange size	Design series	Without assembly

Code	Size
016	NG16
025	NG25
032	NG32
040	NG40
050	NG50
063	NG63

Code	Size	Flange
64	016	1" SAE62
65	025	1 ¼" SAE62
66	032	1 ½" SAE62
68	040/050	2" SAE62
70	063	3 ½" PN400

Technical data

Mounting interface		ISO 7368-B*-*-2-A/B
Mounting position		unrestricted
Max. operating pressure	[bar]	up to 420 (depending on p_{max} of flanges)
Flanges		SAE62 (6000 PSI series) ISO 6162, CETOP-square flange (400 bar series)
Surface protection		phosphated

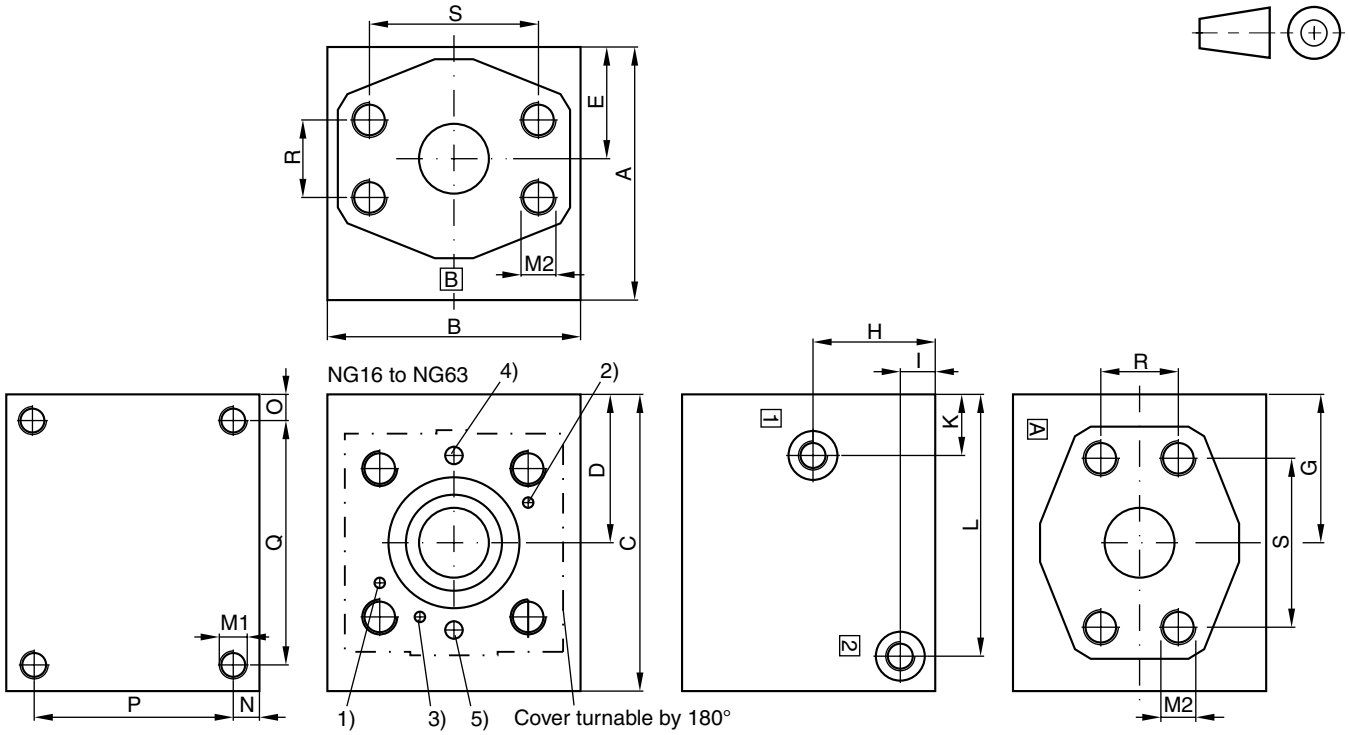

1) Location pin for X connected to B and 2, Y connected to A and 1

2) Location pin for X connected to A and 1, Y connected to B and 2

3) Location pin for pressure functions

4) X or Y, orifice/plug ① (connected to A and 1)

5) X or Y, orifice/plug ② (connected to B and 2)

Ordering code	Max. operating pressure [bar]	A	B	C	D	E	G	H	I	K	L	N	O	P	Q	Port A and B	Port 1 and 2	Orifice thread ① and ②	Weight [kg]
CB 016 A 1 64 10 W	420	105	80	105	38.5	34	38.5	45	13	13.5	75.5	10	10	85	85	1" SAE62	G1/4	M5	6
CB 025 A 1 65 10 W	420	125	100	125	50	43	50	55	15	17	94.5	10	10	105	105	1-¼" SAE62	G1/4	M6	11
CB 032 A 1 66 10 W	420	125	125	145	72.5	51	72.5	55	15	31.5	125	15	15	95	115	1-½" SAE62	G1/4	M6	16
CB 040 A 1 68 10 W	420	145	145	170	85	65	85	70	20	35	150	15	15	115	140	2" SAE62	G3/8	M8	25
CB 050 A 1 68 10 W	420	155	155	190	95	70	95	70	20	37	170	15	15	125	160	2" SAE62	G3/8	M8	32
CB 063 A 1 70 10 W	400	192	192	240	120	86.5	120	86.5	20	45	220	15	15	162	210	3-½" PN 400	G3/8	M8	63

Ordering code	M1	M2	R	S
CB 016 A 1 64 10 W	M8 x 16	M12x19	27.8	57.2
CB 025 A 1 65 10 W	M10 x 18	M14x22	31.8	66.6
CB 032 A 1 66 10 W	M16 x 30	M16x32	36.5	79.3
CB 040 A 1 68 10 W	M16 x 30	M20x40	44.5	96.8
CB 050 A 1 68 10 W	M16 x 30	M20x40	44.5	96.8
CB 063 A 1 70 10 W	M16 x 30	M20x33	102.5	102.5

Cartridge manifold blocks are supplied with a set of plugs and orifices.

The adaptor plates A10 and sandwich plates H10 allow energy saving circuits for differential cylinders using the following directional control valves NG10:

D3DW**R*** D3FB**R*** D31FB**R***
D31NW**R*** D3FP**R*** D31FC**R***
D31FP**R***

Features

- To be used in combination with the above-mentioned valves. See also series D31NWR in chapter 2 and series D3FB, D3FP, D31FB, D31FC and D31FP in chapter 3
- Port T1 is used as single tank port. Port T2 is separated from port T1 by the elimination of the tank bridge and is used for regeneration into the A port
- The circuit conception can be integrated into the manifold block as well

Regenerative function

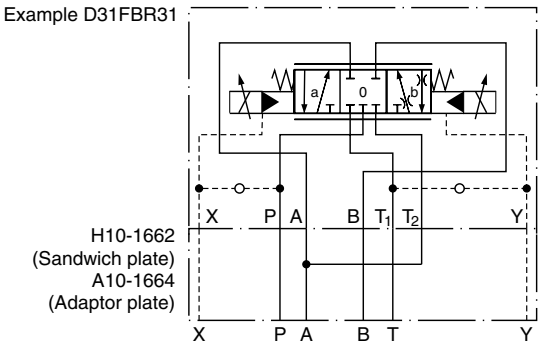

Hybrid function

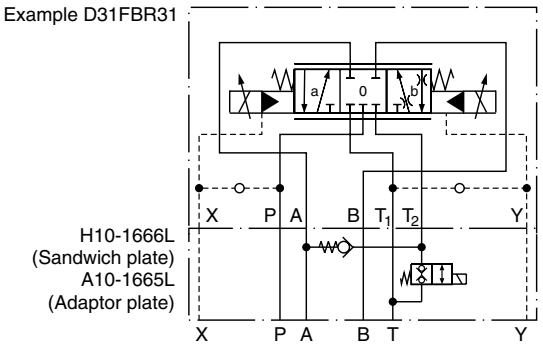

NG10 body without tank bridge – example D31FPR
T2 used as regenerative port.

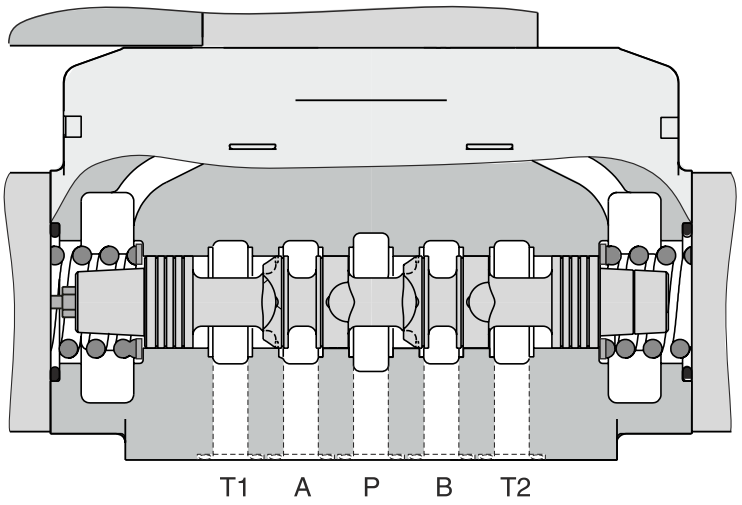

12

General						
Actuation			Solenoid (only A10-1665L and H10-1666L)			
Size			DIN NG10 / CETOP 05			
Mounting interface			DIN 24340 A10 / ISO 4401 / CETOP RP 121-H / NFPA D05			
Mounting position			unrestricted			
Ambient temperature		[°C]	-25...+60, -20...+60 (D*FBR), -20...+50 (D*FPR)			
$MTTF_D$ value		[years]	150			
			A10-1664	A10-1665L	H10-1662	H10-1666L
Weight		[kg]	11.9	14.4	2.8	4.9
Hydraulic						
Max. operating pressure		[bar]	350			
Fluid			Hydraulic oil according to DIN 51524			
Fluid temperature		[°C]	-20...+70 (NBR: -25...+70), -20...+60 (NBR: -25...+60) (D*FBR*, D*FPR*, D31FCR*)			
Viscosity	permitted	[cSt] / [mm²/s]	2.8...400 (20...400 D*FBR, D*FPR)			
	recommended	[cSt] / [mm²/s]	30...80			
Filtration			ISO 4406 (1999); 18/16/13			
			A10*		H10*	
Flow max.		[l/min]	150		250	
	Regeneration B-A	[l/min]	see diagram			
	Regeneration B-T	[l/min]	75		75	
Electrical characteristics						
Duty ratio			100 %			
Protection class			IP65 in accordance with EN 60529 (with correctly mounted plug-in connector)			
Supply voltage		[V]	24			
Tolerance supply voltage		[%]	±10			
Current consumption		[A]	1.21			
Power consumption		[W]	29			
Solenoid connection			Connector as per EN 175301-803			
Wiring min.		[mm²]	3 x 1.5 recommended			
Wiring length max.		[m]	50 recommended			

With electrical connections the protective conductor (PE ⏚) must be connected according to the relevant regulations.

Regenerative function

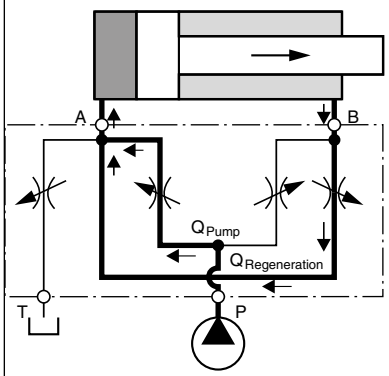

Hybrid function

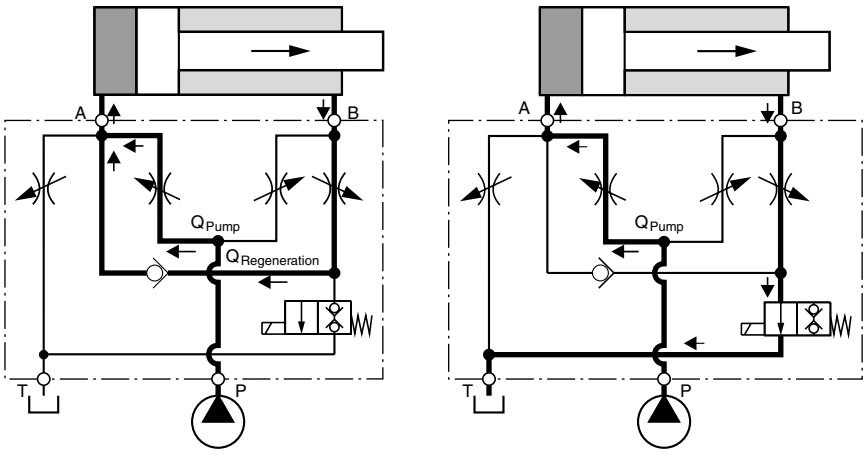

Energy saving A-regeneration and switchable hybrid version for NG10 valves

Subplate A10-1664, mounting interface acc. DIN 24340-A10, CETOP 05 / NG10
for A-regeneration

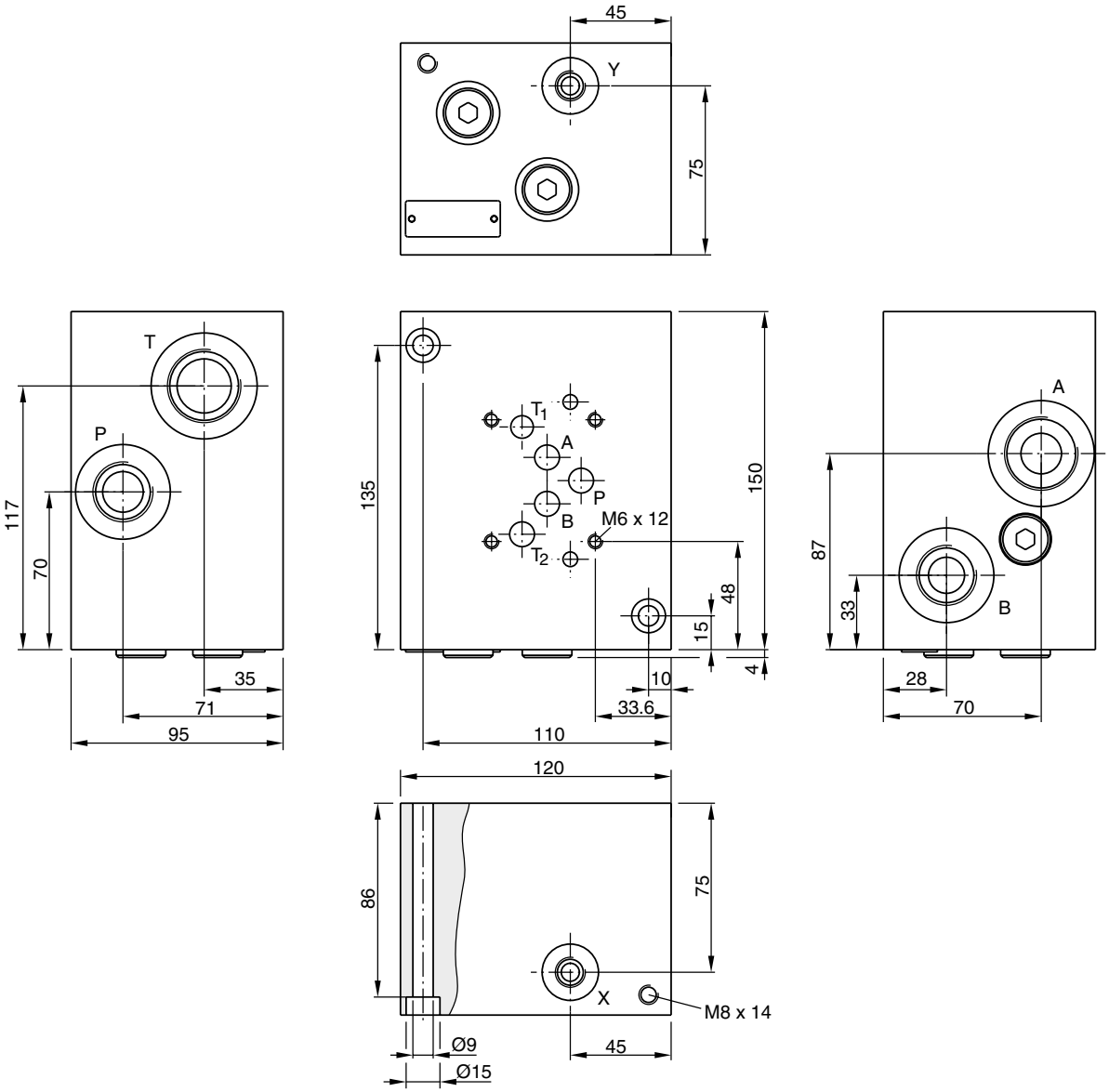

12

Symbol	Ordering code	Port
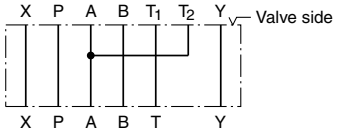	**A10-1664** CETOP 05	A, T = G1 B, P = G¾ X, Y = G¼

Subplate A10-1665L, mounting interface acc. DIN 24340-A10, CETOP 05 / NG10 for hybrid function

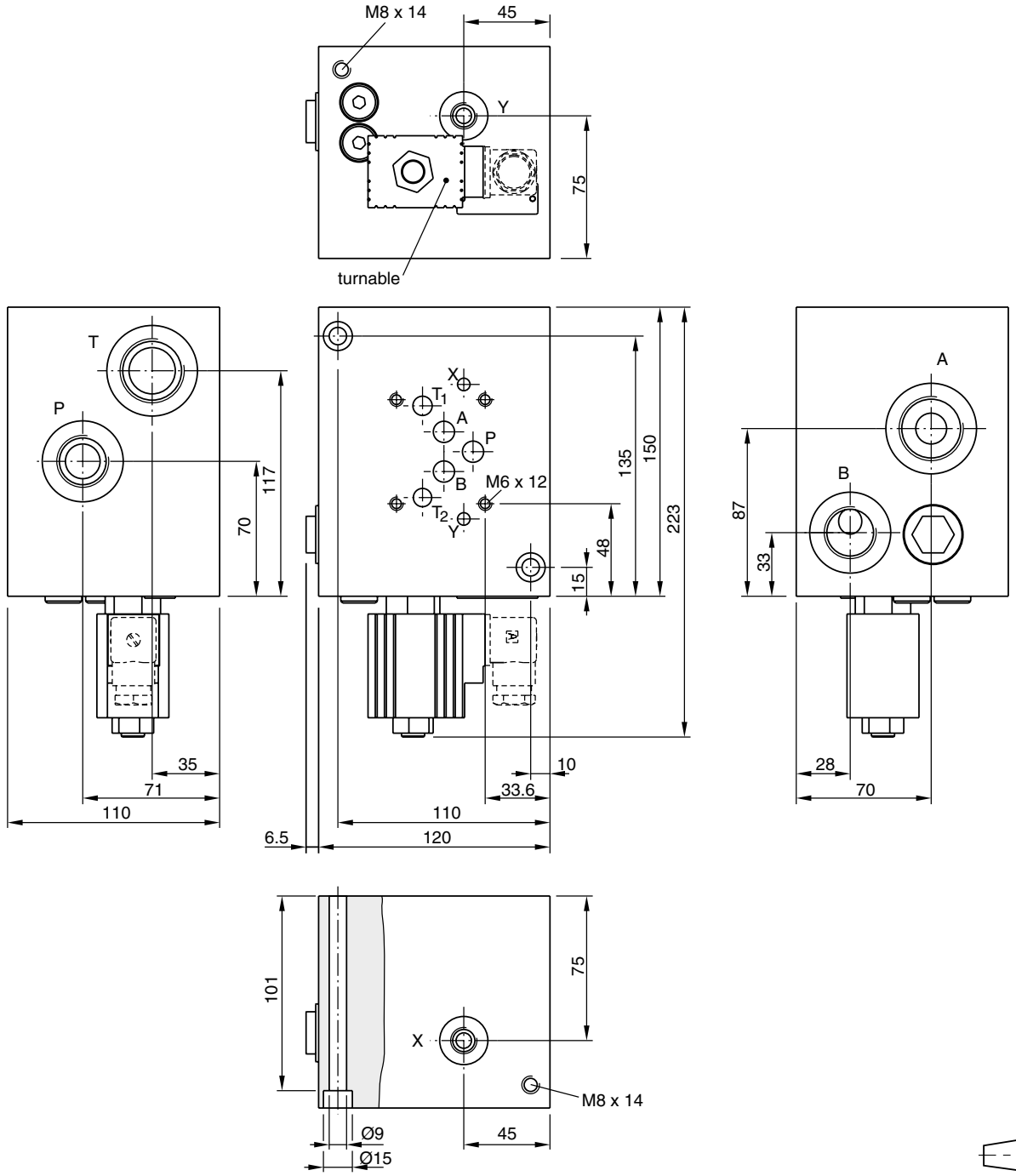

Symbol	Ordering code	Port	Kit
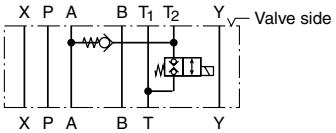	**A10-1665L** CETOP 05	A, T = G1 B, P = G¾ X, Y = G¼	NBR: SK-A10-1665

Sandwich plate H10-1662, mounting interface acc. DIN 24340-A10, CETOP 05 / NG10 for A-regeneration

p/Q performance curves

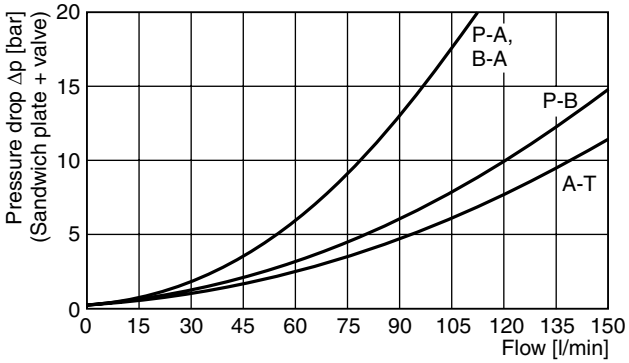

Measured with valves D31FP/FB/FC*, spool Z31 at command signal 100 %.
Curves for D3W, D31NW, D3FB and D3FP on request.

Dimensions

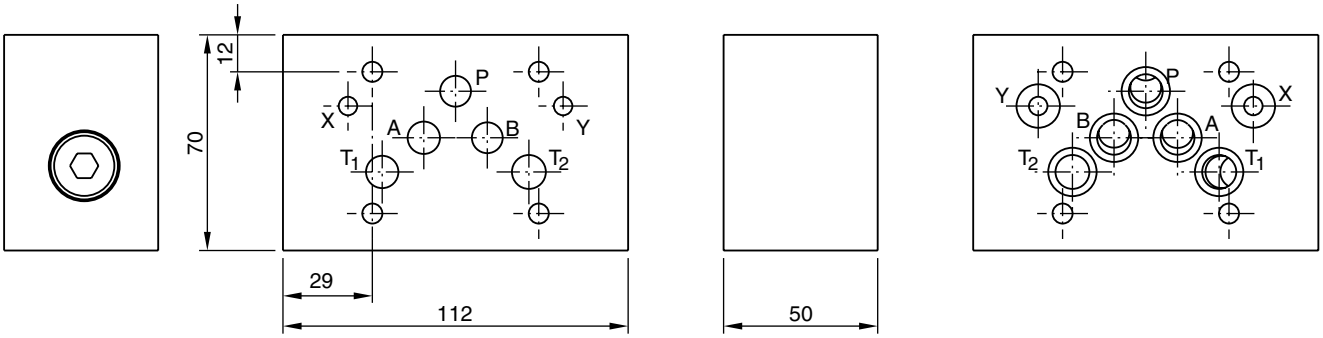

Symbol	Ordering code	Kit		Torque	Kit
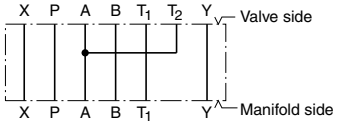	**H10-1662** CETOP 05 (O-rings included in delivery)	BK412	4x M6x90 ISO 4762-12.9	13.2 Nm ±15 %	NBR: SK-H10-1662

Sandwich plate H10-1666L, mounting interface acc. DIN 24340-A10, CETOP 05 / NG10 for hybrid function

p/Q performance curves

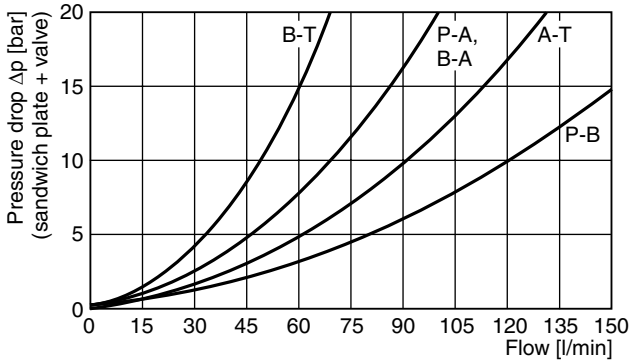

Measured with valves D31FP/FE/FB/FC*, spool Z31 at command signal 100 %.
Curves for D3W, D31NW, D3FB and D3FP on request.

Dimensions

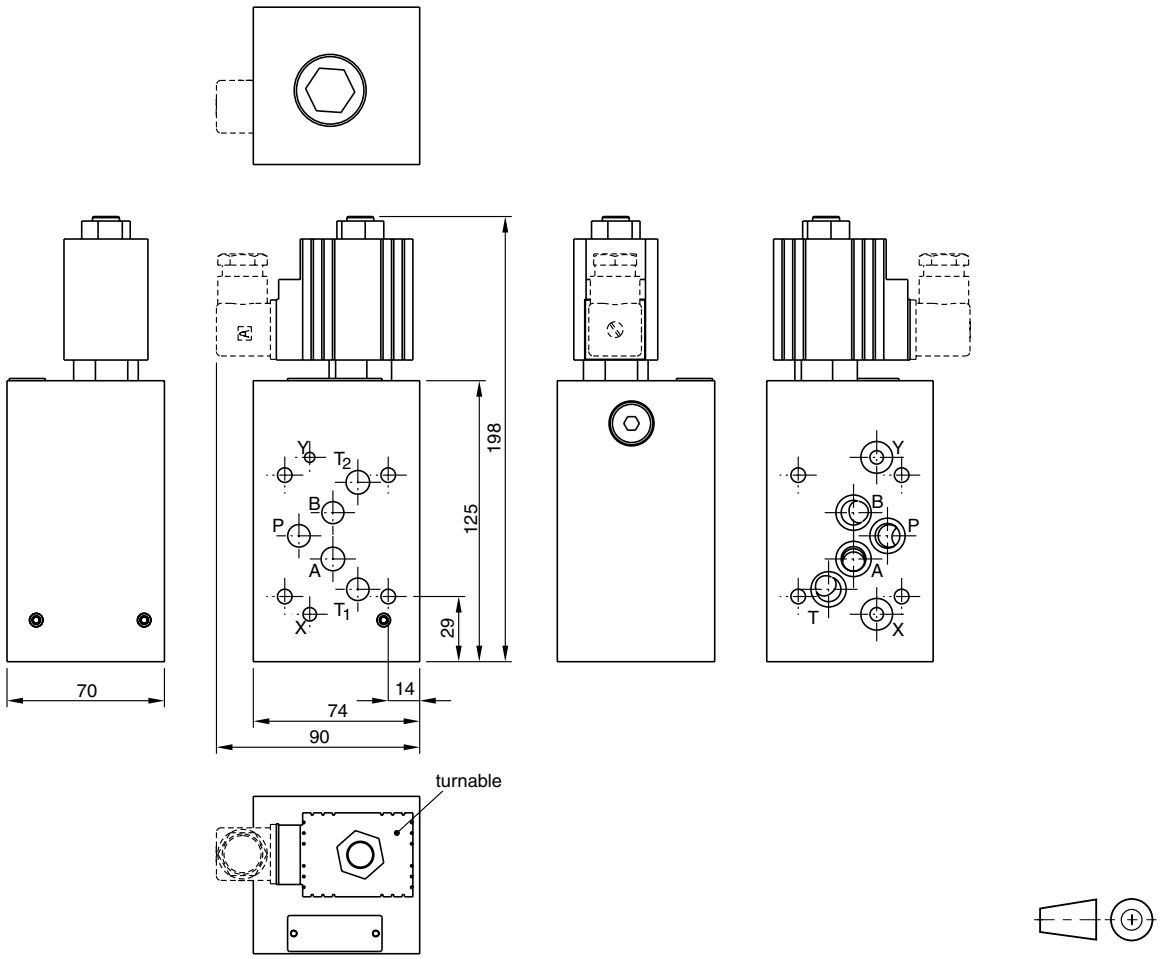

Symbol	Ordering code	Kit		Torque	Kit
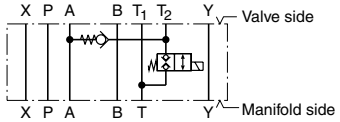	**H10-1666L** CETOP 05 (O-rings included in delivery)	BK528	4x M6x110 ISO 4762-12.9	13.2 Nm ±15 %	NBR: SK-H10-1666

BK bolt kits

Socket head cap screws as per ISO 4762-12.9

Ordering code	Description
BK 399	**Bolt kit M5x25**
BK 375	**Bolt kit M5x30**
BK 443	**Bolt kit M5x45**
BK 300	**Bolt kit M5x50**
BK 380	**Bolt kit M5x60 2 pcs.**
BK 421	**Bolt kit M5x65**
BK 400	**Bolt kit M5x70**
BK 401	**Bolt kit M5x75**
BK 402	**Bolt kit M5x80**
BK 444	Bolt kit M5x85
BK 403	**Bolt kit M5x90**
BK 468	Bolt kit M5x95
BK 404	**Bolt kit M5x100**
BK 466	Bolt kit M5x100 2 pcs.
BK 405	**Bolt kit M5x110**
BK 406	**Bolt kit M5x115**
BK 424	**Bolt kit M5x130**
BK 408	**Bolt kit M6x25**
BK 385	**Bolt kit M6x40**
BK 310	**Bolt kit M6x55**
BK 422	Bolt kit M6x75
BK 412	**Bolt kit M6x90**
BK 508	Bolt kit M6x100
BK 311	**Bolt kit M6x105**
BK 528	**Bolt kit M6x110**
BK 414	**Bolt kit M8x40**
BK 441	Bolt kit M8x50
BK 533	Bolt kit M8x90
BK 538	Bolt kit M8x95
BK 510	Bolt kit M8x100
BK 505	Bolt kit M10x35
BK 388	**Bolt kit M10x40**
BK 485	**Bolt kit M10x45**
BK 506	Bolt kit M10x45 6 pcs.
BK 389	**Bolt kit M10x50**
BK 390	**Bolt kit M10x50 6 pcs.**
BK 320	**Bolt kit M10x60 4 pcs. / M6x55 2 pcs.**
BK 484	**Bolt kit M10x65**
BK 539	Bolt kit M10x95
BK 521	Bolt kit M10x120 4 pcs. / M6x120 2 pcs.
BK 494	Bolt kit M12x45
BK 391	**Bolt kit M12x50**
BK 486	Bolt kit M12x70
BK 525	Bolt kit M12x75
BK 360	**Bolt kit M12x75 6 pcs.**
BK 532	Bolt kit M12x90
BK 504	Bolt kit M12x100
BK 522	Bolt kit M12x140 6 pcs.
BK 460	Bolt kit M12x145 6 pcs.
BK 415	**Bolt kit M16x55**
BK 366	Bolt kit M16x70
BK 526	Bolt kit M16x80
BK 511	Bolt kit M16x90
BK 529	Bolt kit M16x100
BK 487	Bolt kit M16x110
BK 512	Bolt kit M16x150
BK 507	Bolt kit M18x75
BK 416	Bolt kit M20x70
BK 417	Bolt kit M20x75

Ordering code	Description
BK 527	Bolt kit M20x80
BK 534	Bolt kit M20x90
BK 386	Bolt kit M20x90 6 pcs.
BK 481	Bolt kit M20x110
BK 513	Bolt kit M20x120
BK 514	Bolt kit M20x150
BK 515	Bolt kit M20x160
BK 419	Bolt kit M24x120 8 pcs.
BK 516	Bolt kit M24x150 8 pcs.
BK 530	Bolt kit M24x160 8 pcs.
BK 418	Bolt kit M30x100
BK 536	Bolt kit M30x120
BK 509	Bolt kit M30x130 8 pcs.
BK 420	Bolt kit M30x140 8 pcs.
BK 520	Bolt kit M30x150
BK 531	Bolt kit M30x150 8 pcs.
BK 518	Bolt kit M30x160
BK 519	Bolt kit M30x180

If no other specification is indicated, 1 bolt kit contains 4 screws.

Thread length

Threads	M5	M6	M10	M12
Thread length	1.5 x Ø thread			

Note

The torque for bolt kits or tie rod kits is according to valve type/product. Consult product chapters.

Torque for plugs

(Specifications ±15 %) [1)]

Metric	[Nm]
M10 x 1	15
M12 x 1.5	25
M14 x 1.5	25
M18 x 1.5	40
M20 x 1.5	50
M22 x 1.5	60
M24 x 1.5	65
M27 x 2	90
M33 x 2	140
M42 x 2	240
M48 x 2	300

BSPP	[Nm]
1/8	15
1/4	25
3/8	40
1/2	60
3/4	90
1	140
1 1/4	240
1 1/2	300
2	550

UNF	[Nm]
5/16	6.9
3/8	6.9
7/16	25
1/2	25
9/16	40
3/4	40
7/8	60
1 1/16	90
1 3/16	140
1 5/16	240
1 5/8	300

Bold letters =
Short-term availability

[1)] The tightening torques refer to counter material steel, cast iron and SG iron by usage of impact wrenches (with torsion bar) and impulse tools.
The plugs have to be screwed in slightly oiled in bodys respectively blocks.
For aluminium plugs the specified torque above has to be reduced to one third.
For aluminium blocks should be used 75 % of specified above.

TK tie rod kits

Tie rod kits as per DIN 835-10.9

Ordering code	Description	recommended stacking length	
		min.	max.
TK 1455	**Tie rod kit M5x70**	**56**	**62**
TK 1482	**Tie rod kit M5x80**	**66**	**72**
TK 1453	Tie rod kit M5x90	76	82
TK 1484	**Tie rod kit M5x100**	**86**	**92**
TK 1446	**Tie rod kit M5x110**	**96**	**102**
TK 1473	**Tie rod kit M5x120**	**106**	**112**
TK 1474	**Tie rod kit M5x130**	**112**	**122**
TK 1405	**Tie rod kit M5x140**	**122**	**132**
TK 1450	**Tie rod kit M5x150**	**132**	**142**
TK 1409	**Tie rod kit M5x160**	**142**	**152**
TK 1411	**Tie rod kit M5x170**	**152**	**162**
TK 1454	**Tie rod kit M5x180**	**162**	**172**
TK 1415	**Tie rod kit M5x190**	**172**	**182**
TK 1416	**Tie rod kit M5x200**	**182**	**192**
TK 1475	**Tie rod kit M5x210**	**192**	**202**
TK 1407	Tie rod kit M5x220	202	212
TK 1413	Tie rod kit M5x230	212	222
TK 1434	Tie rod kit M5x240	222	232
TK 1436	Tie rod kit M5x250	232	242
TK 1438	Tie rod kit M5x260	242	252
TK 1476	Tie rod kit M5x270	252	262
TK 1485	Tie rod kit M6x80	66	71
TK 1486	**Tie rod kit M6x90**	**76**	**81**
TK 1487	**Tie rod kit M6x100**	**86**	**91**
TK 1418	**Tie rod kit M6x110**	**96**	**101**
TK 1488	Tie rod kit M6x120	106	111
TK 1489	**Tie rod kit M6x130**	**112**	**121**
TK 1490	**Tie rod kit M6x140**	**122**	**131**
TK 1422	**Tie rod kit M6x150**	**132**	**141**
TK 1491	**Tie rod kit M6x160**	**142**	**151**
TK 1423	**Tie rod kit M6x170**	**152**	**161**
TK 1492	**Tie rod kit M6x180**	**162**	**171**
TK 1493	**Tie rod kit M6x190**	**172**	**181**
TK 1427	**Tie rod kit M6x200**	**182**	**191**
TK 1494	**Tie rod kit M6x210**	**192**	**201**
TK 1428	Tie rod kit M6x220	202	211
TK 1460	Tie rod kit M6x230	212	221
TK 1495	Tie rod kit M6x240	222	231
TK 1432	Tie rod kit M6x250	232	241
TK 1496	**Tie rod kit M6x260**	**242**	**251**
TK 1497	Tie rod kit M6x270	252	261
TK 1469	Tie rod kit 4 x M10x170 / 2 x M6x170	152	155
TK 1478	Tie rod kit 4 x M10x190 / 2 x M6x190	172	175
TK 1470	Tie rod kit 4 x M10x220 / 2 x M6x220	202	205
TK 1479	Tie rod kit 4 x M10x250 / 2 x M6x250	232	235

TK-M5 NUT	Nut M5 (10 pcs.)
TK-M6 NUT	Nut M6 (10 pcs.)
TK-M10 NUT	Nut M10 (10 pcs.)

If no other specification is indicated, 1 tie rod kit contains 4 bolts and 4 nuts.

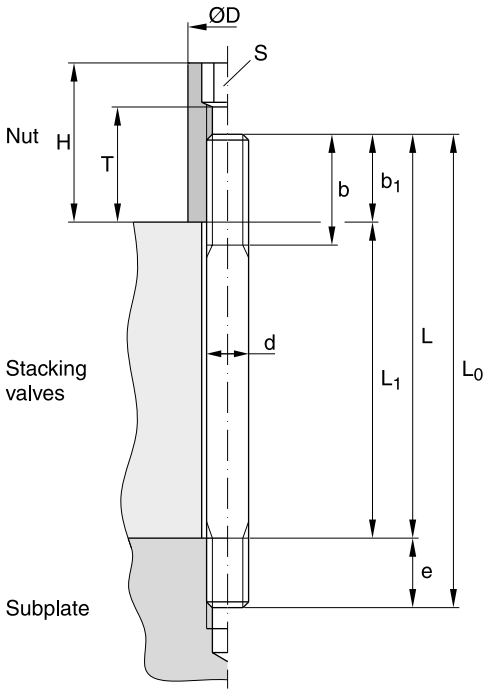

$b_1 \geq 1.5d$
$b_1 < b$
$b_1 < T$

d	D	S	H	T	e	b 1)	b 2)	b 3)
M5	9	5	25	20	10	16	22	22
M6	10	6	25	20	12	18	24	24
M10	17	10	25	15	15	26	32	45

Example:

TK1411: M5 x 170 DIN835 =
nominal stud length L = 170 mm.
stacking length L_1 = 160 mm
total stud length L_0 = 180 mm

Note:

The torque for bolt kits or tie rod kits is according to valve type/product. Consult product chapters.

Bold letters =
Short-term availability

b 1) L ≤ 120 mm
b 2) 130 mm ≤ L ≤ 200 mm
b 3) 200 mm < L

The pressure gauge selector valve allows to connect up to 5 or 10 measuring points to one pressure gauge. When measuring is completed, the gauge is pressure-relieved to prevent it from being damaged by pressure surges. The accuracy and life time of the pressure gauge are thus increased considerably.



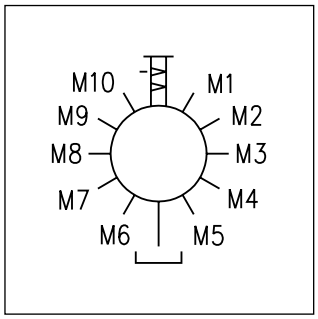

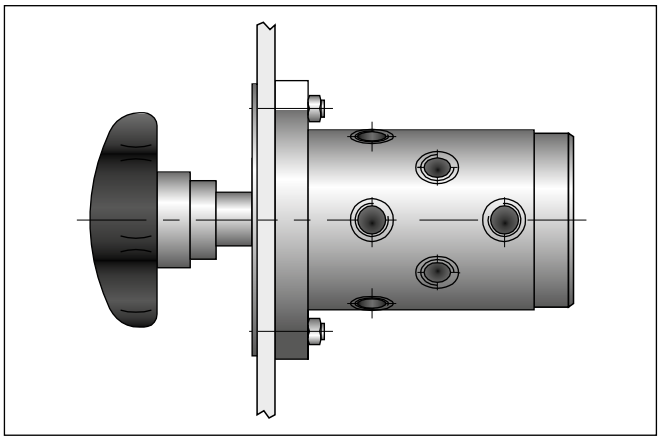

Design

Pressure gauge selector valve with locking, pressure-relieving piston. Measuring point selection by marked rotary handle and graduated dial.

Function

To select one of the measuring points from 1 to 5 or 1 to 10, the rotary handle is pulled out fully, and turned to the left or right. When the measuring point is selected by means of the handle marking and the dial, the handle is pushed in and the pressure gauge loaded with the pressure present. The piston is locked in the measuring position by a catch. When measuring is completed, the handle is pulled out, to relieve the pressure gauge via the drain line.

Features

- 5 or 10 measuring positions optional
- Extends the service life of the manometer by unloading the pressure

Ordering code

WM		A	
Pressure gauge selector valve	Measuring points	Design	Design series (not required for ordering)

Code	Measuring
5	**5 points**
10	**10 points**

Bold letters =
Short-term availability

Technical data

General		
Mounting position		unrestricted
Ambient temperature	[°C]	-20...+60
Mounting		panel mounted
Connections		G⅛
Operation		by hand
Seals		Fluorocarbon
Measuring position selection		by turning handle
Weight	[kg]	1.8
Hydraulic		
Max. operating pressure	[bar]	315
Fluid		Hydraulic oil according to DIN 51524
Fluid temperature	[°C]	-20…+70
Viscosity range, permitted	[cSt]/[mm²/s]	20...400
recommended	[cSt]/[mm²/s]	30...80
Filtration		ISO 4406 (1999); 18/16/13
Max. pressure in drain port Le	[bar]	1.0

WM5A*

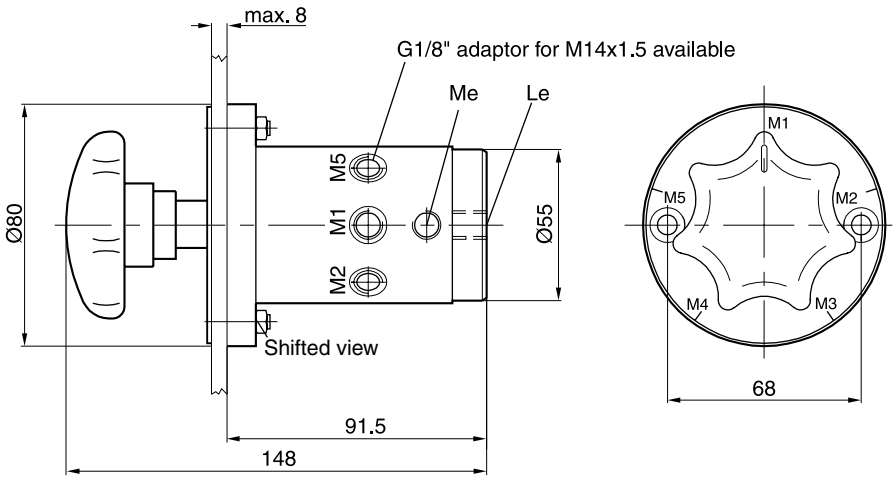

WM10A*

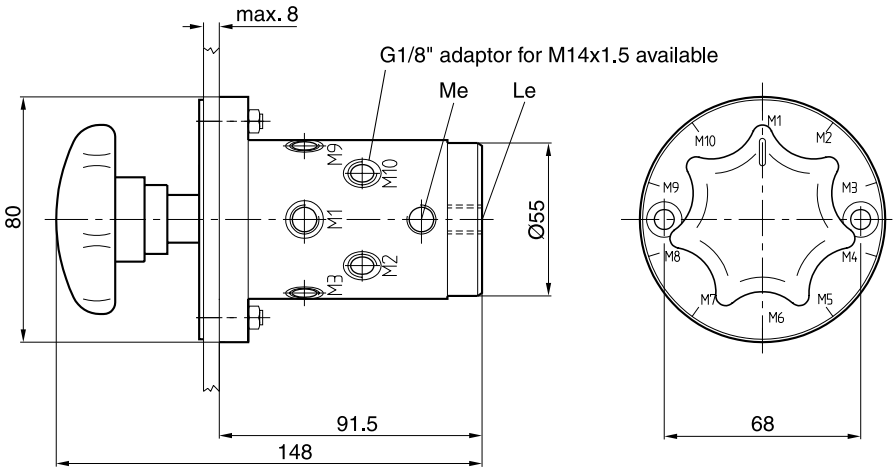

Mounting opening

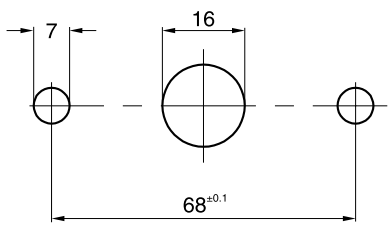

12

The electro-hydraulic pressure switch provides an electric signal when the sensed pressure goes above or below the selected setting.



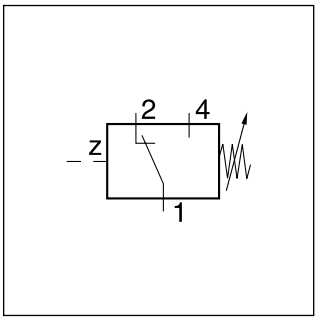

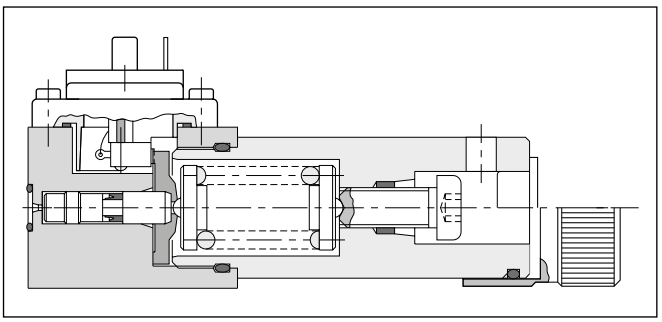

Function

The spring loaded piston is hydraulically dampened. The PSB provides a very accurate hysteresis between the switching points (see diagram).

The required operating pressure is adjusted by the set-screw. Unauthorised adjustments can be prevented by the optional cylinder lock. The electric element is a micro switch with snap-action contact. Three terminals permit application as "On", "Off" or "Changeover" switch.

The electrical connection is made with a 3-pole plug-in connector to EN 175301-803 with ground.

Note

For inductive DC loads a spark discharger should be used to increase service life.

Features

- Flange or pipe mounting
- 4 pressure ranges
- Can be used as opener or closer
- Cylinder lock optional

Ordering code

PSB	□	□	□	□	□	□
Pressure switch with manual switching point adjustment	**Switching pressure range**	**Adjustment**	**Connection**	**Seal**	**Design series** (not required for ordering)	**Lock**

Code	Switching pressure range
040	**3 to 40 bar**
100	**10 to 100 bar**
160	**10 to 160 bar**
250	**20 to 250 bar**

Code	Adjustment
A	**Hexagon socket**
S	Knob with scale

Code	Connection
F1	**Flange (front face)**
V1	**Fitting (front face, tube Ø6)**

Code	Lock
–	**without lock**
Z	Cylinder lock (not for scale knob)

Code	Seal
A	**NBR**
1	FPM

Bold letters =
Short-term availability

Technical data

General		
Symbol		DIN 24340
Design		Plunger type switch
Mounting		PSB*F1* flange (front face) PSB*V1 pipe mounting
Mounting position		unrestricted
Ambient temperature	[°C]	-20 ... +60
$MTTF_D$ value	[years]	150
Weight	[kg]	1.0
Hydraulic		
Operating pressure	[bar]	to 315
Actuating pressure difference		see diagram
Duty cycle		max. 1/s
Fluid		Hydraulic oil according to DIN 51524
Fluid temperature	[°C]	-20...+70 (NBR: -25...+70)
Viscosity, permitted	[cSt] / [mm²/s]	20 ... 400
recommended	[cSt] / [mm²/s]	30 ... 80
Filtration		ISO 4406 (1999); 18/16/13
Electrical connection		Plug-in connector to EN 175301-803
Insulation		IP65 as per EN 60529 (with correctly mounted plug-in connector)
Contact load carrying capacity		5 A at 250 VAC; 1 A at 50 VDC; 0.2 A at 250 VDC

Plug EN 175301-803

Description	Threaded cable joint	Ordering code
Plug EN 175301-803, design type AF, protection class IP65	PG11	**HR 21500157**
Plug with LED, 12...230 V AC/DC, protection class IP65	PG11	**HR 21502321**

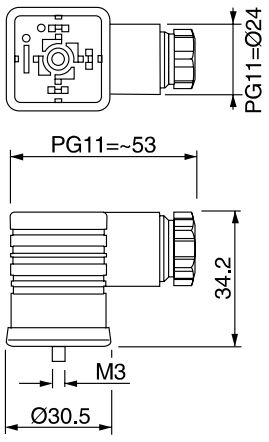

12

Switching pressure difference

PSB040

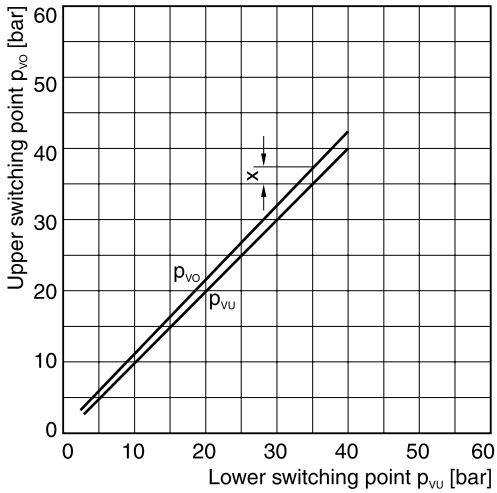

PSB100

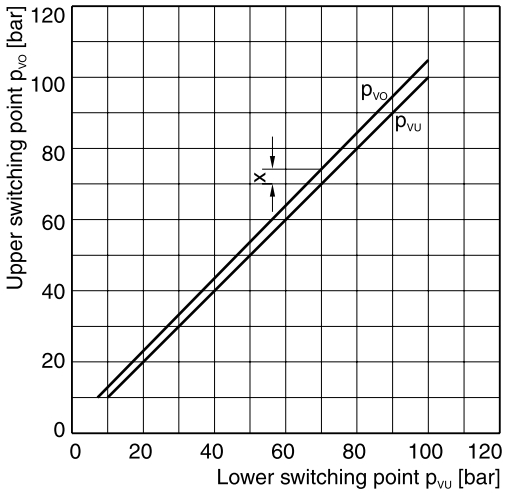

PSB160

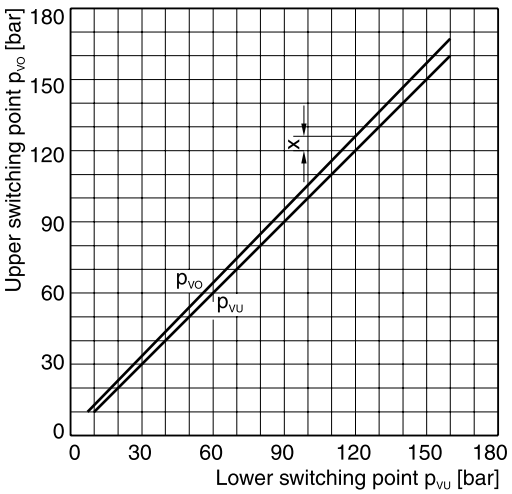

PSB250

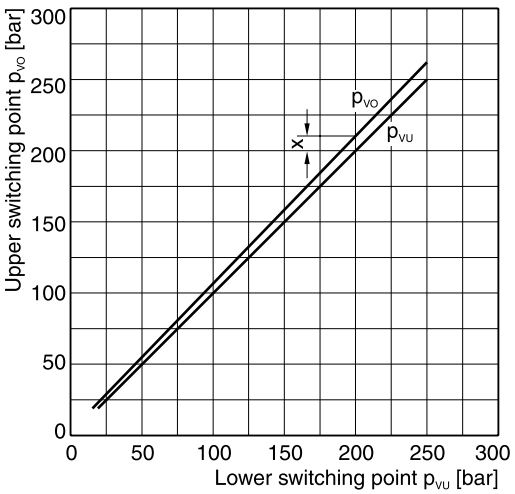

X = switching differential

All characteristic curves measured with HLP46 at 50 °C.

12

Electrical connections

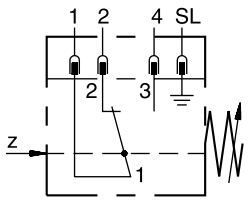

Electrical connection EN175301-803

PSB*F1*

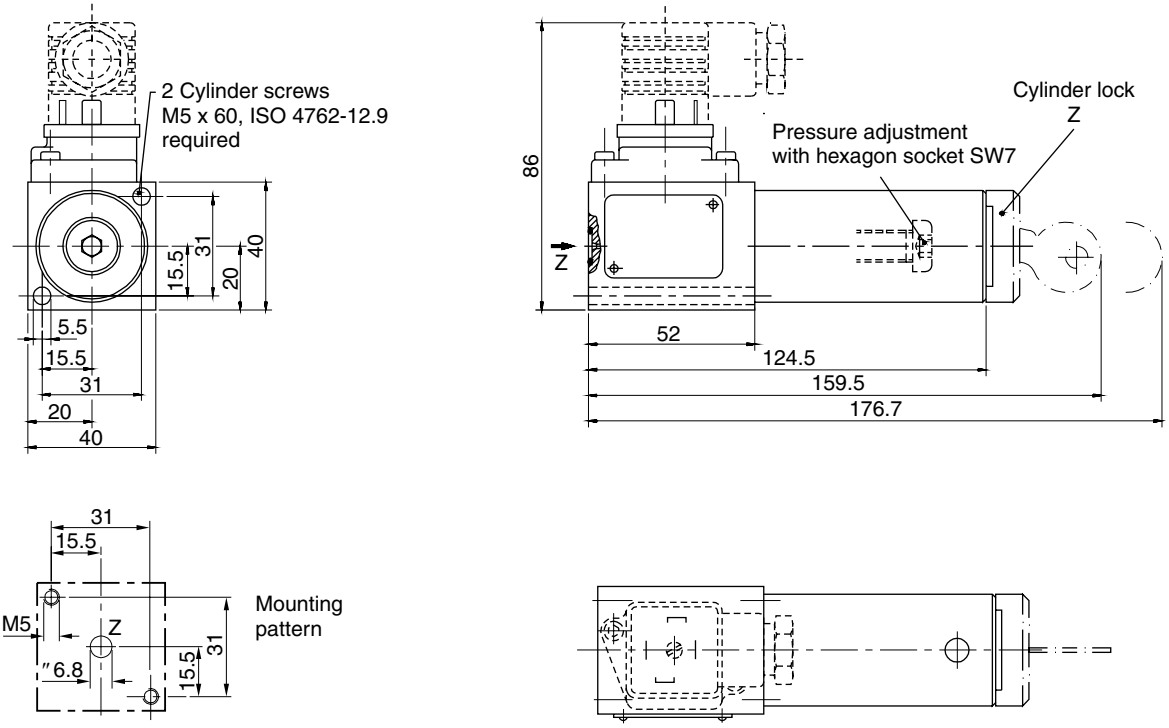

PSB*V1*

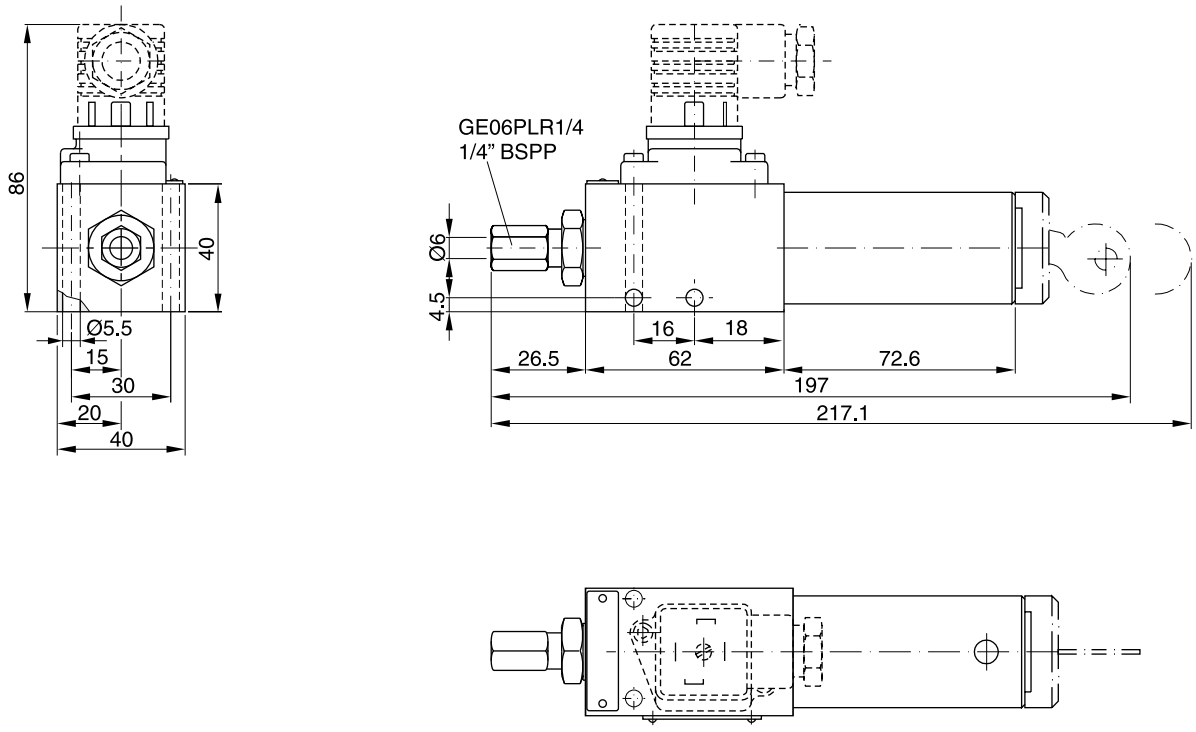

12

Technical Data

Switch code	Ordering code	Nominal size	Function
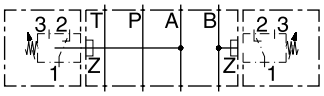	**H06PSB-994**	**06**	**Pressure switch connection to A or B or A and B: Connections not used are closed by plug.**
	H10PSB-996	**10**	
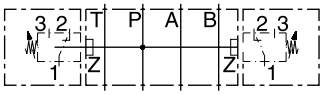	H06PSB-993	06	Pressure switch connection to P (left or right mounting is possible). Connection not used is closed by plug.
	H10PSB-995	10	

Bold letters =
Short-term availability

Dimensions NG06

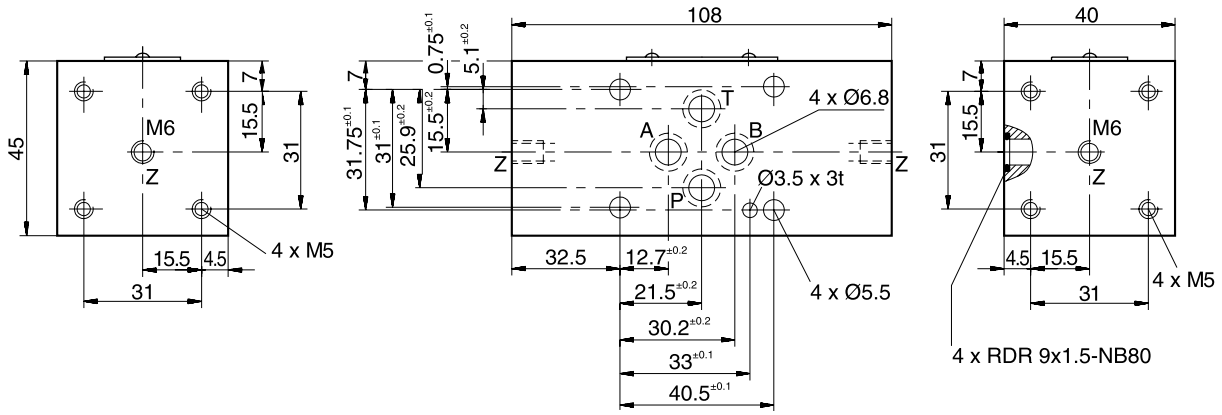

Dimensions NG10

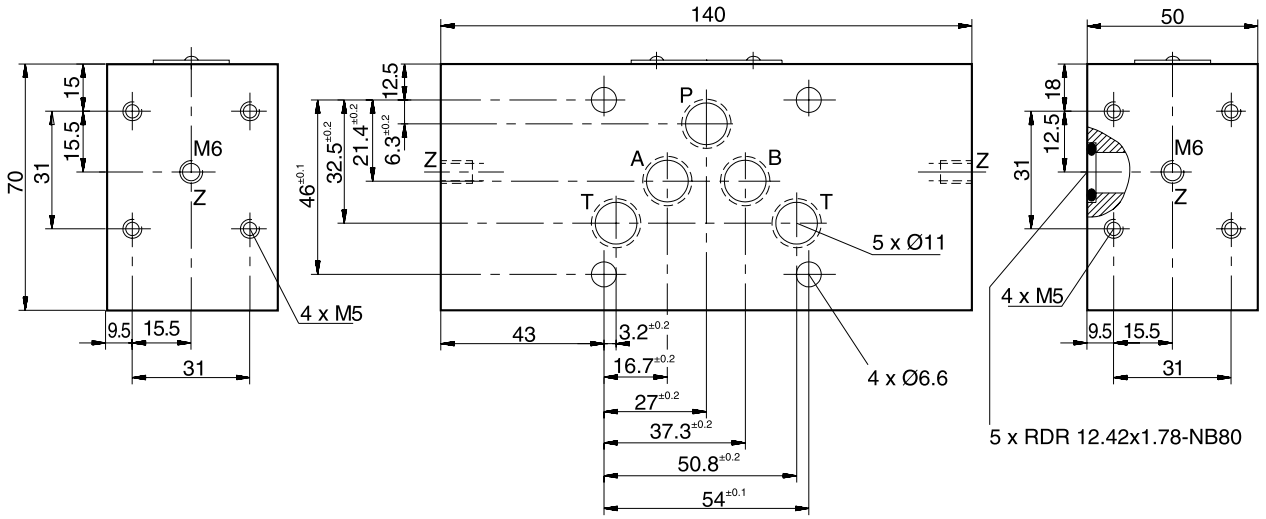

12

PSB UK.INDD 17.04.19

- Compact
- Rugged
- Reliable
- Easy operation
- Long-term stability
- Excellent interference resistance
- Metal housing
- High protection class
- Many variants
- Rotatable
- Analogue output
- Password
- MPa, bar, psi



The Pressure Controller combines the functions of a pressure switch, a pressure sensor and a display instrument:

- Pressure display (manometer)
- Switching outputs
- Analogue signal

Simple operation, compact design and high reliability are the most important features of the SCPSD. The Pressure Controller offers excellent technical performance and optimum pressure management. It is ideal for permanent use in industrial applications.

Easy to operate

Parameter setting is carried out via the keys or with a programming module.

High functionality

Every switching output can be set individually:

- Normally closed/normally open contacts
- On and off switching pressures
- Delay times
- Hysteresis/window function
- Damping

Intelligent settings which are not possible with a mechanical switch can be achieved with these convenient switch functions. Several switches can be replaced by a single controller.

The analogue output is individually settable

- 0/4…20 mA switchable
- Settable initial pressure
- Settable final pressure

Reliable/safe

Pressure is captured by a measuring cell with long-term stability. Any functional error is monitored and can be processed in accordance with DESINA. Thanks to a password, unauthorized change of parameters is prevented.

Rugged

The housing is made of metal and is resistant to humidity, shock and vibrations. The electronics are protected from reverse polarity, overvoltage and short circuits.

Everything within view

The large illuminated display is readable even from a considerable distance. Pressures are shown in MPa, bar or psi.

Optimum installation possibilities

With its compact design and excellent interference resistance the SCPSD is suitable for installation under critical conditions.

With its directionally settable housing, the display can always be read very easily.

Universal

Many versions are available to suit a wide variety of applications.

- Optical interface
- Switch status display

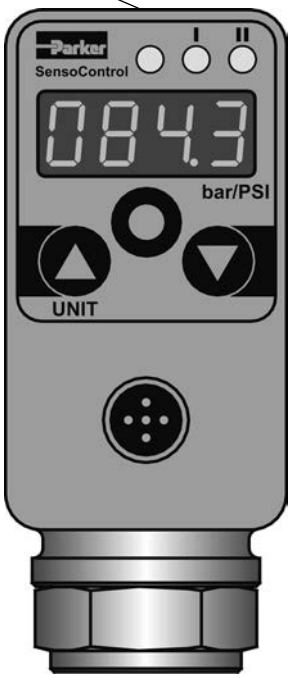

Everything in view
- Chamfered display
- Digital display
- Large
- Luminescent
- Display
- psi/bar/Mpa
- Actual pressure
- Minimum pressure
- Maximum pressure
- Switching points

Easy to operate
- 3 large keys
- Display of units

Pressure connection
- Stainless steel
- Measuring cell stable long-term
- Wide media tolerance

Rugged
- Metal housing
- Watertight
- High interference resistance
- Vibration resistant
- Shockproof

Flexible installation
- Compact
- Rotatable 290°



Thread
- Internal thread
- External thread



Tube clamp
- Safe mounting with a rugged SCSD-S27 clamp

Programming module
- Can be set with ControllerWIN software



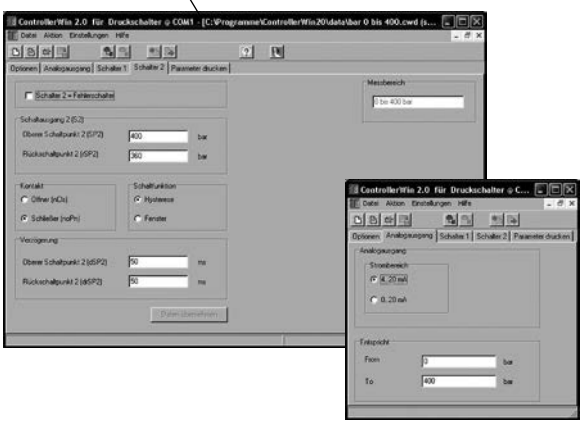

12

SCPSD	004	010	016	060	100	250	400	600
Pressure range P_n (bar)	-1...4	-1…10	-1...16	0…60	0…100	0…250	0…400	0…600
Overload pressure P_{max} (bar)	10	20	40	120	200	500	800	1200
Burst pressure P_{burst} (bar)	12	25	50	550	800	1200	1700	2200
Measuring element	Ceramic low pressure			DMS thin film high pressure				

Input quantities	
Reversing cycles	≥ 100 Mio.
Scanning rate	≥ 5 ms
Connecting thread	G1/4 BSPP; ED soft seal NBR [1)] (DIN 3852 T2, form X); ED (DIN3852 T11, form E)
Torque	35 Nm
Parts in contact with media	Low pressure: 1.4404 stainless steel; AL2O3 ceramic; NBR high pressure: stainless steels 1.4404; 1.4542
Temperature range of medium	-20 …+85 °C
Weight	approx. 300 g
Output quantities	
Accuracy	± 0.5 % FS typ.; ± 1 % FS max.
Temperature drift	± 0.02 % FS/°K typ. (at -20…+85 °C) ± 0.03 % FS/°K max.
Long-term stability	± 0.2 % FS/a
Repeat accuracy	± 0.25 % FS
Switching point accuracy	± 0.5 % FS typ.; ± 1 % FS max.
Display accuracy	± 0.5 % FS typ. ± 1 Digit ± 1 % FS max. ± 1 Digit
Response speed	
Switching output	≤ 10 ms
Analogue output	≤ 10 ms
Electrical connection	
Power supply	15…30 VDC nominal 24 VDC; protection class 3
Electrical connection	M12x1; 4-pole; 5-pole with gold-plated contacts. appliance inlet connector DIN EN 175301-803 form A (formerly DIN43650)
Short circuit protection	yes
Reverse polarity protection	yes
Overload protection	yes
Current consumption	< 100 mA

Housing	
	directionally adjustable up to 290°
Material	pressure die-casting Z 410; painted
Foil material	polyester
Display	4-figure 7-segment LED; red; digit height 9 mm
Protection class	IP67 DIN EN 60529; IP65 with plug-in connector DIN EN 175301-803 form A (formerly DIN43650)
Environmental conditions	
Environmental temperature range	-20…+85 °C
Storage temperature range	-40…+100 °C
Vibration resistance	20 g; 10…500 Hz IEC60068-2-6 [2)]
Shock resistance	50 g; 11 ms IEC60068-2-29 [2)]
EM compatibility	
Interference emissions	EN 61000-6-3
Interference resistance	EN 61000-6-2
Outputs	
Switching outputs	2 MOSFET high side switches (PNP)
Contact functions	normally open/normally closed; window/hysteresis; freely settable function
Switching voltage	Power supply - 1.5 VDC
Switching current max.	0.5 A per switch
Short circuit current	2.4 A per switch
Analogue output	0/4…20 mA; programmable; freely scalable; RL ≤ (power supply - 8 V)/ 20 mA (≤ 500 Ω)

12

1) Other sealing materials (FPM, EPDM etc.) on request.
2) Does not apply to DIN EN 175301-803 form A (formerly DIN43650) version.

SCPSD-xxx-04-x6

1 switching output;
DIN EN 175301-803 form A (formerly DIN43650)

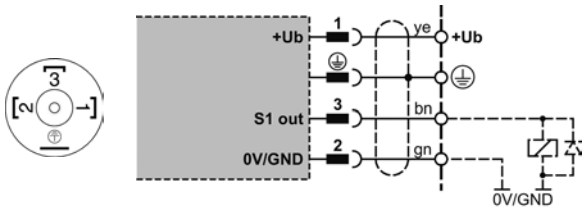

SCPSD-xxx-04-x7

2 switching outputs;
M12x1; 4-pole

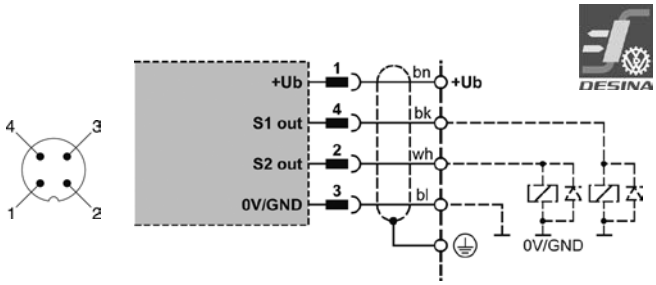

SCPSD-xxx-14-x7

1 switching output;
1 analogue output;
M12x1; 4-pole

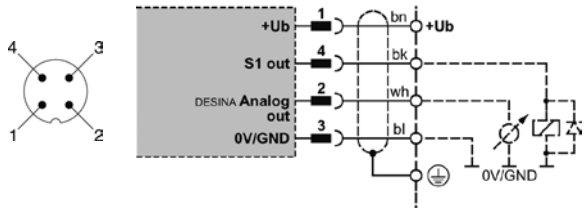

SCPSD-xxx-14-x5

2 switching outputs;
1 analogue output;
M12x1; 5-pole

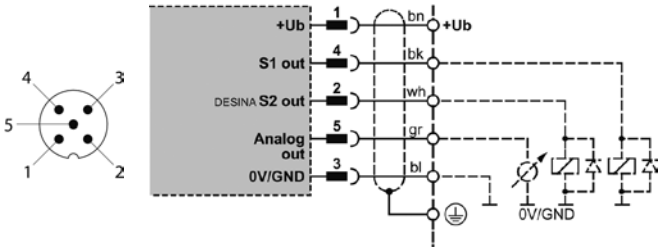

ye = yellow gn = green wh = white gr = grey
bn = brown bk = black bl = blue

Measurement range (bar)	Display resolution increment (bar)	Smallest reverse switch value RSP	Greatest switch value SP	Smallest settable difference between SP and RSP (SP-RSP)
-1…4	0.01	-1	4	0.08
-1…10	0.01	-1	10	0.05
-1…16	0.01	-1	16	0.09
0…60	0.1	0	60	0.3
0…100	0.1	0	100	0.6
0…250	1	0	250	2
0…400	1	0	400	3
0…600	1	0	600	3

12

Pressure range selection

With pressure switches the settable pressure is very relevant.

Because a 400 bar pressure switch shows the same resolution (1 bar) as a 600 bar pressure switch (also 1 bar), a 600 bar pressure switch can be deployed even at a smaller nominal pressure (eg. 315 bar).

The positive effects of this are the same accuracy with higher safety and fewer product variants.

External thread
SCPSD-xxx-x4-1x

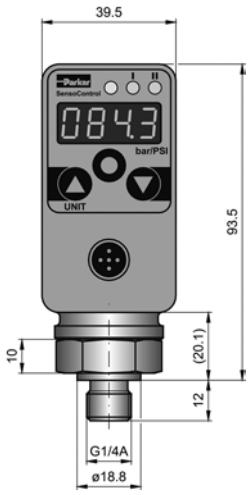

High and low pressure
DMS/ceramic

Internal thread
SCPSD-xxx-x4-2x

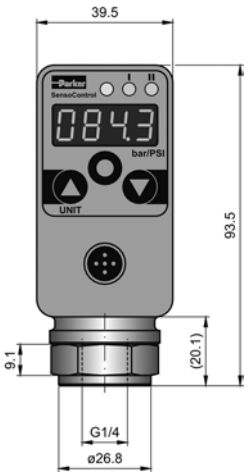

High pressure (from 60 bar)
DMS

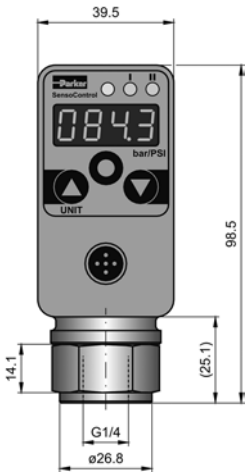

Low pressure (up to 16 bar)
Ceramic

M12 plug-in connector
SCPSD-xxx-x4-x5

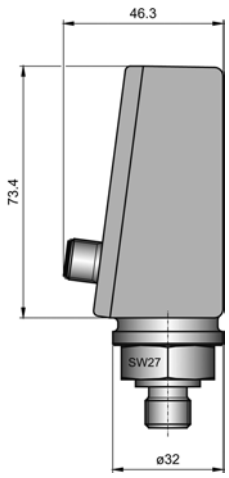

DIN EN 175301-803 form A (formerly DIN43650)
SCPSD-xxx-04-x6

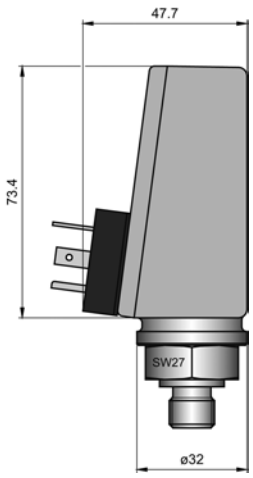

Accessories
Clamp

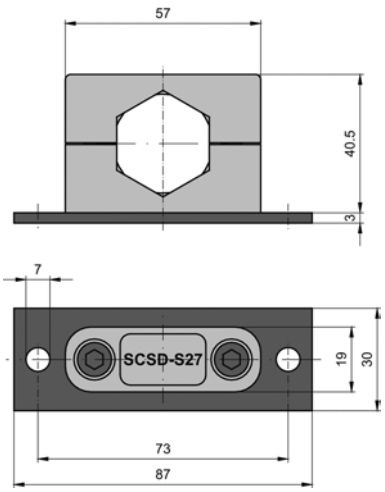

12

SCPSD digital pressure switch

Pressure range
004; 010; 016; 060; 100; 160, 400; 600 bar

1 switching output; without analogue output
DIN EN 175301-803 form A
(formerly DIN 43650) plug-in connector — **SCPSD - xxx - 04 - x 6**

2 switching outputs; without analogue output
M12x1 plug-in connector; 4-pole — **SCPSD - xxx - 04 - x 7**

1 switching output; with analogue output
M12x1 plug-in connector; 4-pole — **SCPSD - xxx - 14 - x 7**

2 switching outputs; with analogue output
M12x1 plug-in connector; 5-pole — **SCPSD - xxx - 14 - x 5**

Type
G1/4 BSPP external thread = 1
G1/4 BSPP internal thread = 2

Ordering examples

SCPSD-100-04-27
Pressure range 100 bar
2 switching outputs
G ¼ BSPP internal thread
M12 plug-in connector

SCPSD-60-14-27
Pressure range 60 bar
1 switching output
1 analogue output
G ¼ BSPP internal thread
M12 plug-in connector

SCPSD-004-14-17
Pressure range 4 bar
2 switching outputs
1 analogue output
G ¼ BSPP external thread
M12 plug-in connector

Accessories

PC programming kit	**SCSD-PRG-KIT**
Fixing clamp	**SCSD-S27**
Reducing adaptor M22x1.5	**SCA-¼-M22x1.5-ED**
Reducing adaptor G ½ BSPP	**SCA-¼-ED-½-ED**
Damping adaptor	**SCA-1/X-EDX-1/X-D**
Flange adaptor for mechanical pressure switch	**SCAF-¼-40**

Connecting cable and separate plugs

Connecting cable, ready-made — SCK-400-xx-xx
(open cable end)

Cable length in m
02 2 m
05 5 m
10 10 m

Plug-in connector
45 M12 cable socket; straight
55 M12 cable socket; 90° angled
56 DIN EN 175301-803 form A plug connector
(formerly DIN 43650)

Separate plugs

M12 cable socket; straight	SCK-145
M12 cable socket; 90° angled	SCK-155
DIN EN 175301-803 Form A plug connector (formerly DIN 43650)	SCK-006

12

SCPSD UK.INDD 17.04.19

Pressure intensifiers are used wherever a particular section of a hydraulic system has to be pressurized to a substantially higher pressure than the available primary pressure (clamping functions). With an intensification ratio of 1 : 4 (1 : 2, 1 : 6) it enables a cost-effective system solution especially in clamping applications, with primary pressures up to 125 bar. A pilot operated check valve can be flanged underneath the pressure intensifier for quick filling and decompression of the high pressure section.

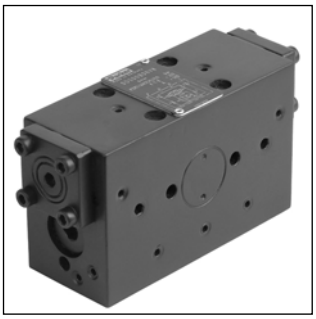

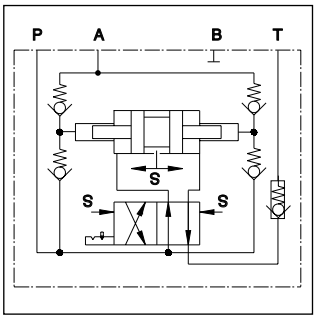

Features

- Mounting pattern NG06, DIN 24 340 Design A, CETOP, ISO
- Check valve attachable to bottom flange
- High pressure up to 500 bar
- Volume flow formed with low pulsation
- Compact design

Design

Main functional parts of the pressure intensifier:
piston, rocker mechanism, slide valve with lock,
4 check valves which separate the high pressure section from the low pressure section, check valve in the tank port to partition of the tank section from the primary pressure.

Function

After the high pressure section is filled with oil, (e.g. extension of a clamping cylinder), the pressure intensifier begins operation: The low pressure moves the intensifier piston because of the surface ratio and compresses the oil column in the high pressure section.

At the end of the intensifier's piston stroke, the rocker mechanism switches the directional slide valve to the crossed switching position, and the intensifier piston pumps oil from the piston rod area into the high pressure section. The process repeats itself until the pressure ratio corresponding to the surface ratio has lead to a balance of force on the intensifier piston.

The pressure intensifier switches itself off and immediately on again when the high pressure (e.g. due to external leakage) begins to drop (pay attention to the flow characteristic). The switching speed of the slide valve is dependent on the operating speed of the intensifier piston.

Note

- To avoid exceeding the admissible maximum pressure, a pressure relief or pressure control valve must be fitted on the primary side (pressure setting, max. 125 bar / 1 : 4, max. 250 bar / 1 : 2 or max. 83 bar / 1 : 6).
- There must be no pressure peak on the primary side when operating in the maximum pressure range.
- It is recommended to mount a 10µm filter on the primary side to ensure damage-free operation.

Ordering code

SD	500		06	V	
Pressure intensifier	**Working pressure 500 bar (max. pressure)**	**Intensification ratio**	**Nominal size (pressure intensifier) Interface DIN 24 340 Design A, CETOP, ISO**	**Seals FPM**	**Design series** (not required for ordering)

Code	Intensification ratio
A	**1 : 4**
B	**1 : 2**
C	**1 : 6**

Bold letters =
Short-term availability

Technical data

General		
Symbol		DIN 24 300
Design		Piston and poppet valve in body
Mounting type		NG06, DIN 24 340, design A, CETOP, ISO
Ports		Subplate
Mounting position		unrestricted
Ambient temperature	[°C]	-20...+60
$MTTF_D$ value	[years]	150
Weight	[kg]	3.0 kg
Hydraulic		
Max. operating pressure		
Port A	[bar]	500,
Port P, B, T	[bar]	125 (ratio 1:4), 250 (ratio 1:2)
Fluid		Hydraulic oil according to DIN 51524
Fluid temperature	[°C]	+10...+70
Viscosity, permitted	[cSt] / [mm^2/s]	20 ... 400
recommended	[cSt] / [mm^2/s]	30...80
Filtration		ISO 4406 (1999); 18/16/13
Flow		see performance curve
Intensification ratio		$p_P : p_A$ = 1 : 4, 1 : 2, 1 : 6
Flow volume		$Q_P : Q_A$ = 4 : 1, 2: 1, 6 : 1
Stroke volume	[cm^3]	3 (per double stroke)
Operating		Hydraulic-mechanic automatic control

Accessories

Type	Description	Number
SD 500*06V	Seals	
	9.25 x 1.78	3
	10.82 x 1.78	1
	M5 x 75 ISO 4762-12.9	4

Seals are included in delivery.
Mounting screws are not included in delivery.

12

Surface finish	Kit		
$R_{max}6.3$ 0.01/100	BK401	4x M5x75 ISO 4762-12.9	9.0 Nm

Flow characteristics

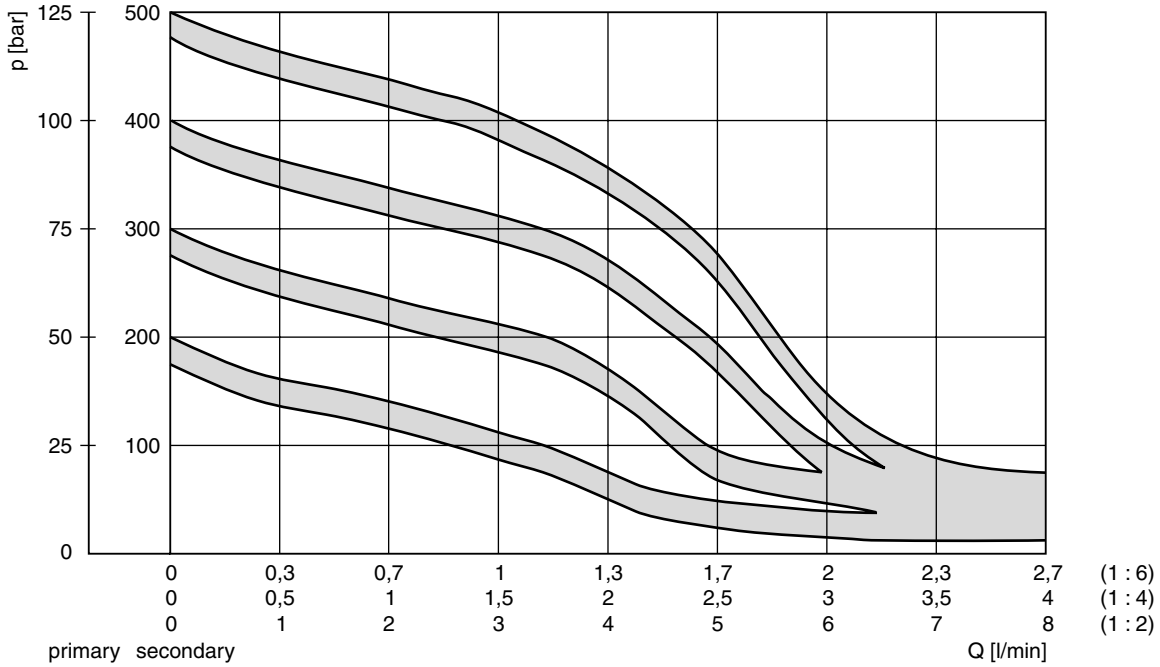

Approximate values of the compression time for compressing a filled volume to target pressure (1 : 4)

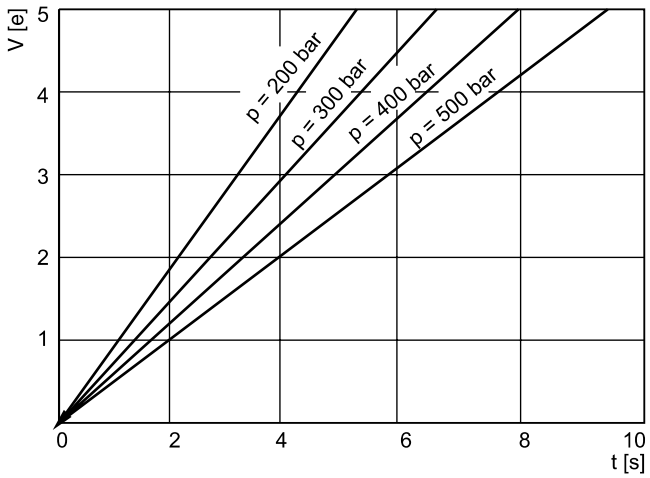

All characteristic curves measured with HLP46 at 50 °C.

Dimensions

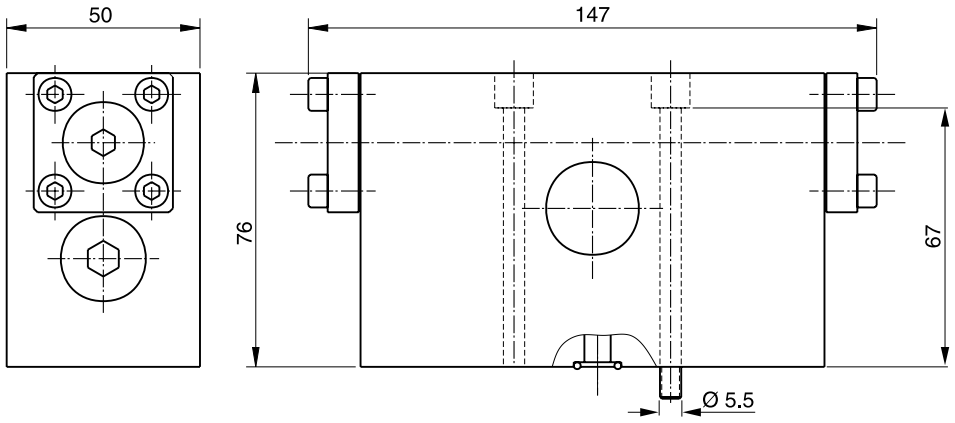

Pilot operated check valve plate NG06

Description

Pilot operated check valve plates are flanged under the pressure intensifier for quick filling and decompression.

Design

The check valve plate is equipped with a hydraulic, pilot operated check valve.

Opening ratio: Main valve 2.5 : 1

Pilot ratio 10 : 1

Technical data

General		
Design		Spring loaded ball seat valve
Mounting type		Flange
Mounting position		any
Ambient temp.	[°C]	-20...+60
Weight	[kg]	1.3
Hydraulic		
Operating pressure range		
Port A Port P, B, T	[bar] [bar]	max. 500, max. 125 / 1:4 and 250 / 1:2
Fluid		Hydraulic oil according to DIN 51524
Fluid temperature	[°C]	+10...+70
Viscosity, perm. [cSt] / [mm²/s] recom. [cSt] / [mm²/s]		20...400 30...80
Filtration		ISO 4406 (1999); 18/16/13
Flow		see characteristic curve
Pilot ratio		Main valve 2.5:1, pre-discharge 10:1
Opening pressure	[bar]	approx. 0.5

Ordering code

H06 SDV

Bold letters =
Short-term availability

Accessories

Type	Description	Number
H06SDV	Seals	
	9.25 x 1.78	4
	M5x115 ISO 4762-12.9	4

Seals are included in delivery.
Mounting screws are not included in delivery.

Characteristic curve

Pilot operated check valve

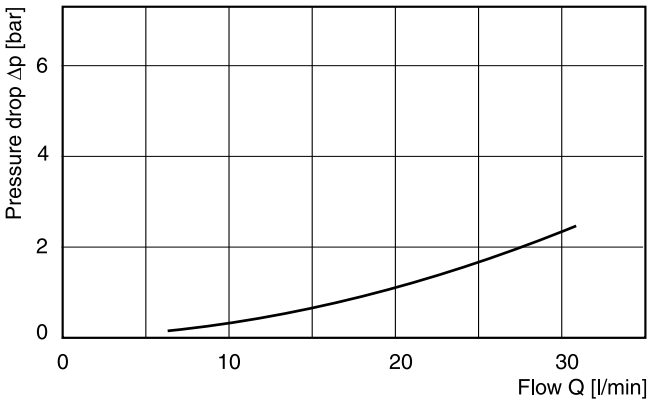

Curve measured with HLP46 at 50 °C.

Dimensions

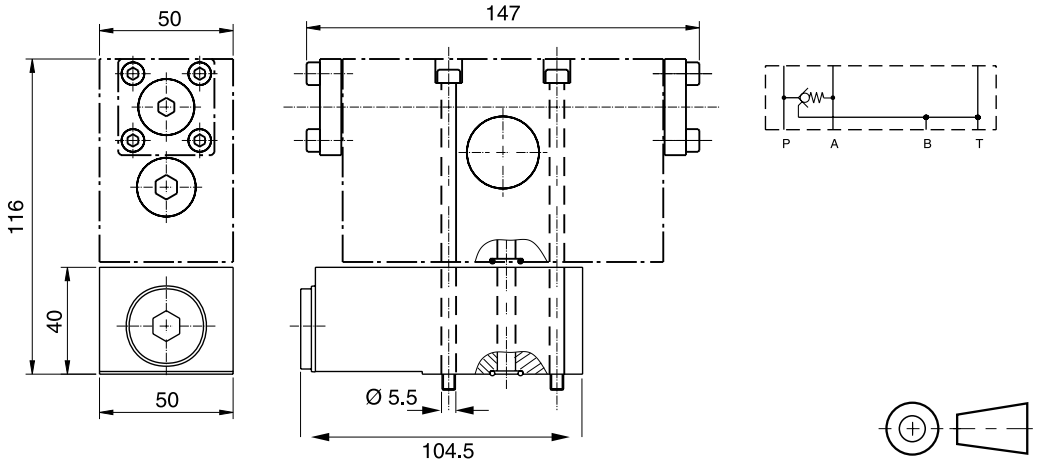

Surface finish	Kit		
R_{max}6.3 ⏥ 0.01/100	BK406	4x M5x115 ISO 4762-12.9	9.0 Nm

Pilot operated check valve plate NG10

Description

Pilot operated check valve plates are flanged under the pressure intensifier for quick filling and decompression.

Design

The check valve plate is equipped with a hydraulic, pilot operated check valve.

Opening ratio: Main valve 2.5 : 1

Pilot ratio 10 : 1

Technical data

General		
Design		Spring loaded ball seat valve
Mounting type		Flange
Mounting position		any
Ambient temp.	[°C]	-20...+60
Weight	[kg]	2.3
Hydraulic		
Operating pressure range		
Port A Port P, B, T	[bar] [bar]	max. 500, max. 125 / 1:4 and 250 / 1:2
Fluid		Hydraulic oil according to DIN 51524
Fluid temperature	[°C]	+10...+70
Viscosity, perm. [cSt] / [mm²/s] recom. [cSt] / [mm²/s]		20...400 30...80
Filtration		ISO 4406 (1999); 18/16/13
Flow		see characteristic curve
Pilot ratio		Main valve 2.5:1, pre-discharge 10:1
Opening pressure	[bar]	approx. 0.5

Ordering code

H10 SDV

Accessories

Type	Description	Number
H10SDV	Seals	
	12.24 x 1.78	4
	M5x75 ISO 4762-12.9	4
	M6x50 ISO 4762-12.9	4

Seals are included in delivery.
Mounting screws are not included in delivery.

Characteristic curve

Pilot operated check valve

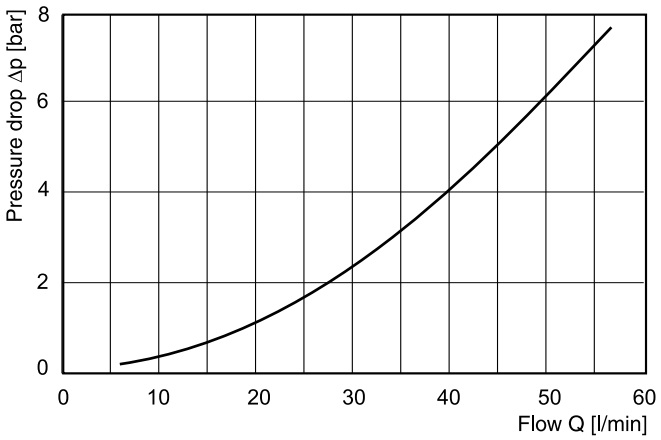

Curve measured with HLP46 at 50 °C.

Dimensions

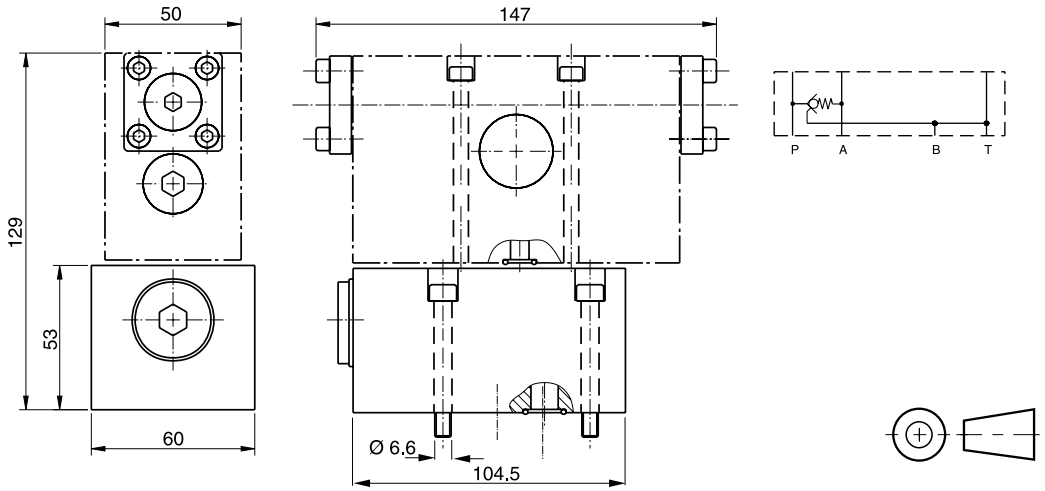

Surface finish	Kit		
R_{max}6.3 0.01/100	BK490	4x M5x75 4x M6x50 ISO 4762-12.9	9.0 Nm 18.0 Nm

Notes

Notes

Notes

Parker Worldwide

Europe, Middle East, Africa

AE – United Arab Emirates,
Dubai
Tel: +971 4 8127100
parker.me@parker.com

AT – Austria, St. Florian
Tel: +43 (0)7224 66201
parker.austria@parker.com

AZ – Azerbaijan, Baku
Tel: +994 50 2233 458
parker.azerbaijan@parker.com

BE/NL/LU – Benelux,
Hendrik Ido Ambacht
Tel: +31 (0)541 585 000
parker.nl@parker.com

BG – Bulgaria, Sofia
Tel: +359 2 980 1344
parker.bulgaria@parker.com

BY – Belarus, Minsk
Tel: +48 (0)22 573 24 00
parker.poland@parker.com

CH – Switzerland, Etoy
Tel: +41 (0)21 821 87 00
parker.switzerland@parker.com

CZ – Czech Republic, Klecany
Tel: +420 284 083 111
parker.czechrepublic@parker.com

DE – Germany, Kaarst
Tel: +49 (0)2131 4016 0
parker.germany@parker.com

DK – Denmark, Ballerup
Tel: +45 43 56 04 00
parker.denmark@parker.com

ES – Spain, Madrid
Tel: +34 902 330 001
parker.spain@parker.com

FI – Finland, Vantaa
Tel: +358 (0)20 753 2500
parker.finland@parker.com

FR – France, Contamine s/Arve
Tel: +33 (0)4 50 25 80 25
parker.france@parker.com

GR – Greece, Piraeus
Tel: +30 210 933 6450
parker.greece@parker.com

HU – Hungary, Budaörs
Tel: +36 23 885 470
parker.hungary@parker.com

IE – Ireland, Dublin
Tel: +353 (0)1 466 6370
parker.ireland@parker.com

IL – Israel
Tel: +39 02 45 19 21
parker.israel@parker.com

IT – Italy, Corsico (MI)
Tel: +39 02 45 19 21
parker.italy@parker.com

KZ – Kazakhstan, Almaty
Tel: +7 7273 561 000
parker.easteurope@parker.com

NO – Norway, Asker
Tel: +47 66 75 34 00
parker.norway@parker.com

PL – Poland, Warsaw
Tel: +48 (0)22 573 24 00
parker.poland@parker.com

PT – Portugal
Tel: +351 22 999 7360
parker.portugal@parker.com

RO – Romania, Bucharest
Tel: +40 21 252 1382
parker.romania@parker.com

RU – Russia, Moscow
Tel: +7 495 645-2156
parker.russia@parker.com

SE – Sweden, Spånga
Tel: +46 (0)8 59 79 50 00
parker.sweden@parker.com

SK – Slovakia, Banská Bystrica
Tel: +421 484 162 252
parker.slovakia@parker.com

SL – Slovenia, Novo Mesto
Tel: +386 7 337 6650
parker.slovenia@parker.com

TR – Turkey, Istanbul
Tel: +90 216 4997081
parker.turkey@parker.com

UA – Ukraine, Kiev
Tel: +48 (0)22 573 24 00
parker.poland@parker.com

UK – United Kingdom, Warwick
Tel: +44 (0)1926 317 878
parker.uk@parker.com

ZA – South Africa, Kempton Park
Tel: +27 (0)11 961 0700
parker.southafrica@parker.com

North America

CA – Canada, Milton, Ontario
Tel: +1 905 693 3000

US – USA, Cleveland
Tel: +1 216 896 3000

Asia Pacific

AU – Australia, Castle Hill
Tel: +61 (0)2-9634 7777

CN – China, Shanghai
Tel: +86 21 2899 5000

HK – Hong Kong
Tel: +852 2428 8008

IN – India, Mumbai
Tel: +91 22 6513 7081-85

JP – Japan, Tokyo
Tel: +81 (0)3 6408 3901

KR – South Korea, Seoul
Tel: +82 2 559 0400

MY – Malaysia, Shah Alam
Tel: +60 3 7849 0800

NZ – New Zealand, Mt Wellington
Tel: +64 9 574 1744

SG – Singapore
Tel: +65 6887 6300

TH – Thailand, Bangkok
Tel: +662 186 7000

TW – Taiwan, Taipei
Tel: +886 2 2298 8987

South America

AR – Argentina, Buenos Aires
Tel: +54 3327 44 4129

BR – Brazil, Sao Jose dos Campos
Tel: +55 800 727 5374

CL – Chile, Santiago
Tel: +56 2 623 1216

MX – Mexico, Toluca
Tel: +52 72 2275 4200

© 2019 Parker Hannifin Corporation. All rights reserved.

Catalogue MSG11-3500/UK, 04/2019

EMEA Product Information Centre
Free phone: 00 800 27 27 5374
(from AT, BE, CH, CZ, DE, DK, EE, ES, FI, FR, IE, IL, IS, IT, LU, MT, NL, NO, PL, PT, RU, SE, SK, UK, ZA)

US Product Information Centre
Toll-free number: 1-800-27 27 537

www.parker.com

Your local authorized Parker distributor